LIBERTY LAKE RV PARK SHOP

INDEX OF DRAWINGS

ARCHITECTURAL - SITE

A0.1 COVER SHEET
A1.0 SITE PLAN
A1.01 OVERALL SITE PLAN

ARCHITECTURAL - BUILDING

A2.0 CONSTRUCTION FLOOR PLAN
A2.1 ROOF PLAN
A3.0 EXTERIOR ELEVATIONS
A4.1 WALL SECTIONS

STRUCTURAL

S0.1 GENERAL NOTES
S2.0 FOUNDATION PLAN & ROOF FRAMING PLAN
S3.0 FOUNDATION DETAILS
S3.1 FRAMING DETAILS

ABBREVIATIONS

&	And	C.T.	Ceramic Tile
∠	Angle	C.O.	Clean Out
@	At	CLR.	Clear
℄	Center Line	C.W.	Cold Water
⌭	Channel	COL.	Column
⌀	Round	C.M.U.	Concrete Masonry Unit
ABV.	Above	CONC.	Concrete
A.B.	Anchor Bolt	CONN.	Connection
ACOUST. T.	Accustical Tile	CONST.	Construction
ADJ.	Adjustable	C.J.	Control Joint
A.F.F.	Above Finish Floor	CONT.	Continuous
ALT.	Alternate	CONTR.	Contractor
ALUM.	Aluminum	CORR.	Corridor
ANOD.	Anodized		
APPROX.	Approximate		
ARCH.	Architecture	D.P.	Damp proofing
ASPH.	Asphalt	D.L.	Dead Load
		DEG.	Degree
BM.	Beam	DTL.	Detail
BRG.	Bearing	DIAG.	Diagonal
BLK.	Block	DIM.	Dimension
BD.	Board	DIV.	Division
B.S.	Both Sides	DR.	Door
BOTT.	Bottom	DBL.	Double
BRK.	Brick	DN.	Down
BLDG.	Building	D.S.	Down spout
		D.F.	Drinking Fountain
CAB.	Cabinet	DWG.	Drawing
C.B.	Catch Basin		
CLG.	Ceiling	EA.	Each
CEM.	Cement	ELEC.	Electric
C TO C	Center To Center	ELEV.	Elevator
C.M.T.	Ceramic Mosaic Tile	EQ.	Equal

EQUIP.	Equipment	HT.	Height
EXIST.	Existing	H.D.O.	High Density Overlay
EXP.	Expansion	HWY.	Highway
EXT.	Exterior	H.C.	Hollow Core
E.I.F.S.	Ext. Insul. and Finnish System	H.M.	Hollow Metal
EL.	Elevation	HORIZ.	Horizontal
ENCL.	Enclosure	H.B.	Hose Bibb
E.P.	Electrical Panel	H.W.	Hot Water
		H.W.T.	Hot Water Tank
F.A.B.	Fabricate		
FT.	Feet	IN.	Inch
FIN.	Finish	INFO.	Information
F.E.	Fire Extinguisher	ID.	Inside Diameter
FXT.	Fixture	INSUL.	Insulation
FLASH.	Flashing	INT.	Interior
FLR.	Floor		
F.D.	Floor Drain	JAN.	Janitor
FTG.	Footing	JT.	Joint
FOUND.	Foundation	JST.	Joist
F.A.	Fresh Air		
FR.	Frame	LAM.	Laminate
F.H.	Fire Hydrant	LAV.	Lavatory
FLUOR.	Fluorescent	L.F.	Linear Feet
		L.L.	Live Load
GALV.	Galvanized	LOC.	Location
G.	Gas	L.O.C.	Limits Of Construction
GA.	Gauge		
G.L.	Glass	MFR.	Manufacture
GLU. LAM.	Glue-Laminated	M.O.	Masonry Opening
GND.	Ground	MATL.	Material
G.W.B.	Gypsum Wall Overlay	MAX.	Maximum
		MECH.	Mechanical
HDWR.	Hardware	M.D.O.	Medium Density Overlay
HDWD.	Hardwood	MTL.	Metal

MEZZ.	Mezzanine	SIM.	Similar
MIN.	Minimum	S.C.	Solid Core
MISC.	Miscellaneous	SQ. FT.	Square Feet
		S. ST.	Stainless Steel
N.I.C.	Not In Contact	STD.	Standard
N.T.S.	Not To Scale	STL.	Steel
NO.	Number	STOR.	Storage
		SUSP. CLG.	Suspended Ceiling
O.C.	On Center	S.S.	Sanitary Sewer
OPNG.	Opening		
ORIG.	Original	THK.	Thick
O.D.	Outside Diameter	T & G	Tongue And Groove
		TYP.	Typical
PNL.	Panel	T.C.	Top Of Curb
P.C.	Pre cast Concrete	TEL.	Telephone
PLAS. LAM.	Plastic Laminate	T.O.P.	Top Of Plate
PL.	Plate	T.P.	Top Of Pavement
PLYWD.	Plywood	T.W.	Top Of Wall
PT.	Point		
PREFAB.	Prefabricated	UNFIN.	Unfinished
PREFIN.	Refinished		
P.P.	Power Pole	V.T.R.	Vent Through Roof
		VERT.	Vertical
QUAL.	Quality	V.C.T.	Vinyl Composition Tile
Q.T.	Quarry Tile		
		WAINS.	Wainscot
REF.	Reference	W.P.	Water Proof
REINF.	Reinforcing	W/	With
REV.	Revision	W.F.	Wide Flange
REQ'D	Required	W.D.	Wood
RD.	Roof Drain	W.W.F.	Welded Wire / Fabric
RM.	Room	W.	Waste Line
SHT.	Sheet		
SHTG.	Sheathing		
SHT. MET.	Sheet Metal		

PROJECT TEAM

1. ARCHITECT: Russell C. Page Architects
12906 N. Addison St.
Spokane, Wa 99208
Tel: (509) 467-9748
Fax: (509) 467-9817
E-mail: russ@russellpagearchitects.com

2. OWNER: Lanzce Douglass
1402 E Magnesium Ste 202
Spokane, WA 99217
Tel: (509) 483-6532

3. CIVIL: Whipple Consulting Engineers
2528 N Sullivan Road
Spokane Valley, WA 99216
Tel: (509) 893-2617
Fax: (509) 926-0227

4. GENERAL CONTRACTOR: Douglass Construction
1402 E Magnesium Ste 202
Spokane, WA 99217
Tel: (509) 483-6532
Fax: (509) 483-4966

GENERAL NOTES

STANDARD NOTES:

A. Details and notes on these shall apply unless specifically shown or noted otherwise construction details not fully shown or noted shall be similar to details shown for a similar conditions.

B. The contractor shall report to this office any error, inconsistency or omission he may discover. The contractor is responsible for correcting any mistakes at the job site to the satisfaction of this office.

C. City / county - approved plans shall be kept in a secure place and shall not be used by workers. The contractor shall be responsible that all subcontractors construction sets reflect the same information. The contractor shall also maintain in good condition, one complete set of plans With all revisions, addendum's and change orders on the premises at all times. These are to be under the care of the job superintendent and are to be given to the owner upon completion of the job.

D. When used, fire sprinkler shop drawings are to be submitted to the Building Department prior to installation. Audible and visual alarm system to be installed per ICC A117.1 section 702 (provide shop drawings for review.)

E. Deferred submittals such as cabinet shop drawings, structural steel / joist fabrication drawings. Drawings from manuf. and/ or fabricators, trusses showing loading and bracing TJI's & bracing, audible and visual alarm system drawings, automatic sprinkler system drawings etc. are to be submitted and approved then submitted to the building official within a specified time before any installation and C.O.

JOBSITE:

A. It shall be the responsibility of the contractor to locate all existing utilities whether shown hereon or not and to protect them from damage. The contractor shall bear all expenses of repair or replacement of utilities or other property damaged by operations in conjunction with the execution of the work.

B. The contractor shall take all necessary precautions to ensure a dust-free and safe environment for the occupants and workers at all times.

C. All areas of demolition shall be repaired in workmanlike manner so as to be contiguous with and matching the adjacent surfaces.

DIMENSIONS:

A. Dimensions take precedence over drawing. Do not scale drawings to determine any locations. This office shall be notified of any discrepancy prior to the execution of any work.

B. All dimensions on plans are from face of stud unless otherwise indicated.

C. Exterior dimensions are to face of plywood sheathing/face of concrete foundation wall. Partitions are located by one of the following methods:
   a. where possible, by relationship to adjacent structure
   b. typical relationship to large scale details
   c. by dimensions from structure or partition already located.

FRAMING:

A. Provide horizontal blocking in partitions for cabinets, shelving, toilet accessories and other flush or semi-recessed equipment to be installed on gypsum board or as specified.

FINISH:

A. Weld and grind smooth all steel pipe handrail joints.

MECHANICAL/ELECTRICAL:

A. The contractor shall verify locations of all equipment and coordinate location of floor sinks, floor drains, slab depressions, electrical and plumbing stubouts, and all other work under this scope of responsibilities related to this equipment.

B. All electrical, mechanical, and plumbing work shall conform to the requirements of the current, IMC, NEC and IPC, respectively.

C. Heating, plumbing and electrical plans, where shown diagrammatically, are intended to indicate capacity, size, location and general arrangement.

D. Mechanical contractor shall seal all openings in floor slabs and insulated walls around ducts, pipes, vents, soil pipes, tub traps, conduits, structural members, etc. of penetration thru fire walls are to have required F & T rating per code.

ADA BARRIER FREE NOTES

ALL THRESHOLDS TO NOT EXCEED 1/2" AFF. MAX. PER IBC SECT. 1010.1.7 & ANSI 2009 SECT. 404.2.4.

ALL RAMPS TO BE MAX. SLOPE OF 1 IN 12 TYP. PER IBC SECT. 1012.1 & ANSI 2009 SECT. 405.

ALL HANDICAP RAMPS AT CURBS TO BE PROVIDED W/ DETECTABLE WARNING SURFACE PER I.B.C. SECT. 1109.10 & ANSI 2009 SECT. 406.13.

MIN. 44" WIDE WALKWAY STRIPES SHALL BE PAINTED ON SURFACE OF ACCESS ROUTE TO PUBLIC WAY ACROSS ANY TRAFFIC AREAS.

THE MANEUVERING CLEARANCE AT DOORS W/ CLOSURES THAT MUST BE PULLED TO BE OPENED, SHALL BE 18" WIDE BEYOND STRIKE SIDE OF DOOR X 60" DEEP TYP. SEE ANSI 2009 SECT. 404.2.3.

THE MANEUVERING CLEARANCE AT DOORS THAT MUST BE PUSHED TO BE OPENED, SHALL BE 12" WIDE BEYOND STRIKE SIDE OF DOOR X 48" DEEP TYP. SEE ANSI 2009 SECT. 404.2.3.

ALL DOORWAYS SHALL HAVE A MIN. CLEAR OPENING OF 32" WITH DOOR OPEN 90 DEG. MEASURED BETWEEN THE FACE OF THE DOOR AND THE STOP AS PER IBC 1010.1.1 & ANSI 2009 SECT. 404.2.2.

ALL EXTERIOR HINGED DOORS SHALL HAVE A MAXIMUM PUSHING/PULLING FORCE TO OPEN THE DOOR OF 15 LB. TYP. SEE IBC SECT. 1010.1.3

ALL INTERIOR HINGED DOORS SHALL HAVE A MAXIMUM PUSHING/PULLING FORCE TO OPEN THE DOOR OF 5 LBF. TYP. SEE IBC SECT. 1010.1.3 & ANSI 2009 SECT. 404.2.8.

ALL HANDLES, LATCHES & LOCKS ON DOORS SHALL BE LEVER STYLE. SEE ANSI 2009 SECT. 404.2.6.

WHERE THE VERTICAL CLEARANCE OF AN AREA ADJOINING AN ACCESSIBLE ROUTE OF TRAVEL IS LESS THAN 79", BUT MORE THAN 27", A CONTINUOUS PERMANENT BARRIER SHALL BE INSTALLED TO PREVENT TRAFFIC INTO SUCH AREAS. SEE ANSI 2009 SECT. 307.4.

ACCESSIBLE ROUTE OF TRAVEL SHALL CONNECT THE PROPOSED BUILDING WITH OTHER BUILDINGS & FACILITIES ON SITE PER IBC SECT. 1104.2.

ILLUMINATION SHALL BE PROVIDED ALONG EXTERIOR ACCESSIBLE ROUTE OF TRAVEL & ACCESSIBLE PARKING SPACES OF ONE FOOT-CANDLE MIN. SEE IBC SECT. 1008.2.1.

PROVIDE SIGNAGE W/ INTERNATIONAL SYMBOL OF ACCESS AT PRIMARY ACCESSIBLE ENTRY, AS WELL AS DIRECTIONAL SIGNAGE IDENTIFYING THE NEAREST ACCESSIBLE ENTRY AT ALL OTHER PUBLIC ENTRIES. SEE IBC. SECT. 1111.1.

PROVIDE SIGNAGE IDENTIFYING ACCESSIBLE PARKING, DEPICTING THE INTERNATIONAL SYMBOL FOR ACCESS. ADDITIONAL SIGN REQ'D AT VAN PARKING TO INCLUDE THE PHRASE "VAN ACCESSIBLE". SEE IBC SECT. 1111.1 & ANSI 2009 SECT. 502.7.1.

ALL ACCESSIBILITY SIGNAGE SHALL BE INSTALLED ON WALL ADJACENT TO LATCH SIDE OF DOORS (NOT ON DOOR), CENTERED AT 60" AFF. MAX. SEE ANSI 2009 SECT. 703.3.10 & 703.3.11.

CODE TABULATION

BUILDING INFORMATION

1. Name of project: RV CLUBHOUSE SHOP
2. Date: 6-28-2017
3. Proposed Use: BUSINESS/RETAIL
4. Building Code: IBC 2015
5. Building Area: 1200 S.F.
6. Construction Type: VB
7. Occupancy Group: S1
8. Building Fully Sprinkled: NO
9. Allowable Height: 1 STORY
10. Allowable Area: 9,000 S.F.
11. Occupant Load: 3 OCCUPANTS
12. Exiting:
    Required: 1 Provided: 1

SITE INFORMATION

1. Parcel Number:
2. Legal description: SEE SURVEY PLAN
3. Zoning: C
4. Setbacks:
    Required: Provided:
5. Lot Area:
6. % Coverage:
7. Parking Calculations:

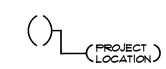

VICINITY MAP

DRAWING SYMBOLS

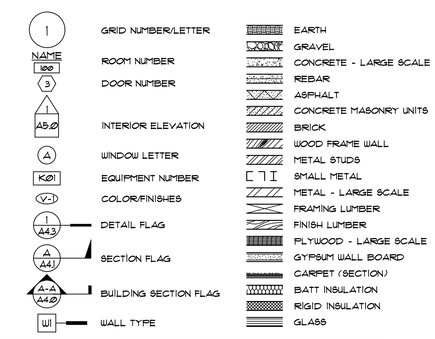

NOTE:
This drawing, its contents and information is the exclusive property of Russell C. Page Architects. It is not to be copied or reproduced without written permission. The information, contents, and information, details or devices may subject the user to penalties.

3738 REGISTERED ARCHITECT RUSSELL C. PAGE STATE OF WASHINGTON

REVISIONS:

NO	DATE	REVISION	BY

Russell C. Page ARCHITECTS
204 N. Division Street, Suite 'E'
Spokane, WA 99202
(509) 467-9748 Fax: (509) 467-9817

PROJECT: LIBERTY LAKE RV PARK

LIBERTY LAKE, WA

DRAWINGS: COVER SHEET

DATE: 6-28-2017

PLOT SCALE: AS NOTED

DRAWN BY:

JOB NO.: 17-120

SHEET NO.: A.01

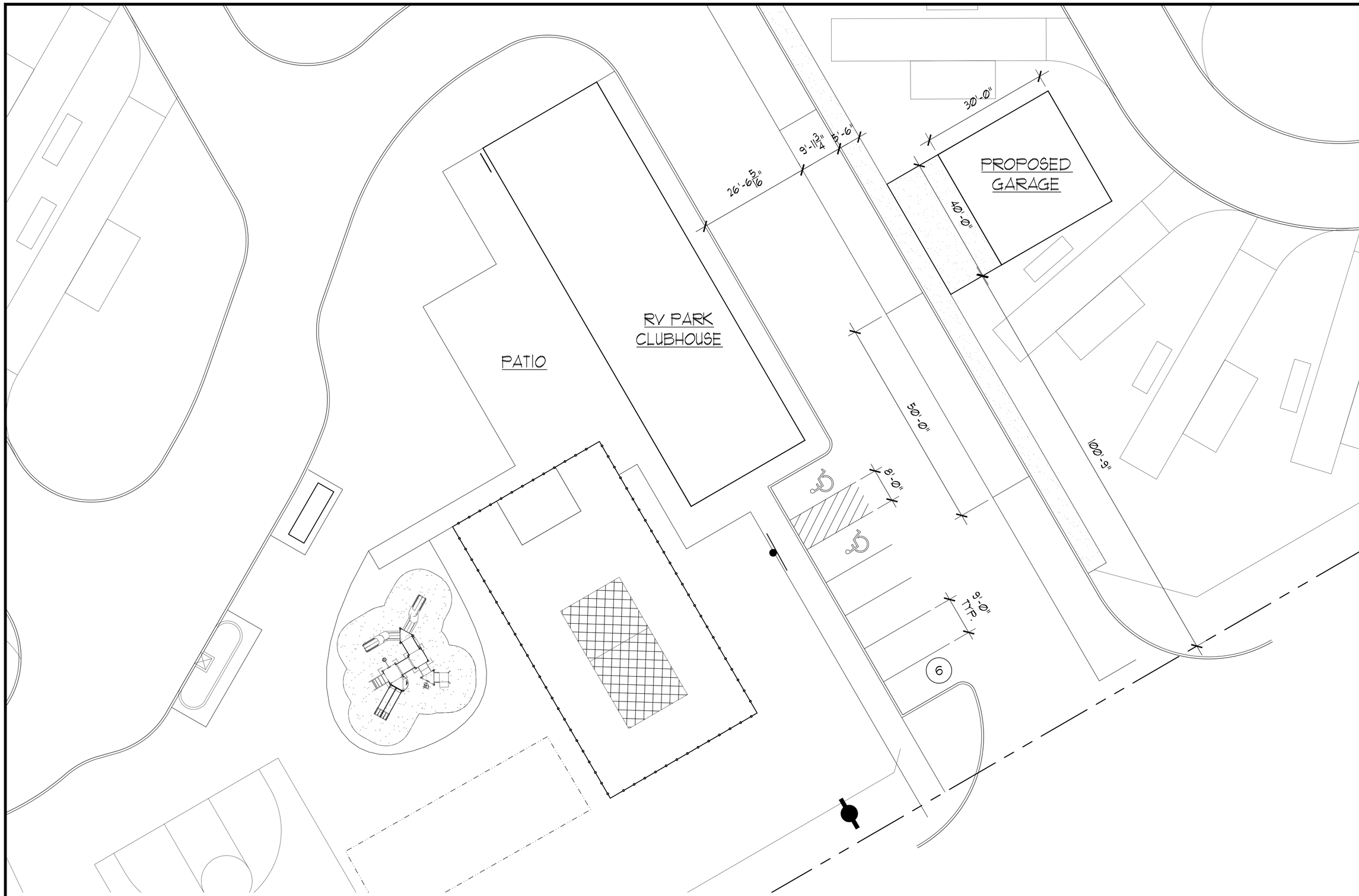

SITE DEVELOPMENT PLAN

1" = 20'-0"

NORTH

NOTE:
This drawing, its contents and information is the property of Russell C. Page Architects. It is not to be copied or reproduced without written permission. The unauthorized use of this information, details or devices may subject the user to penalties.

3738 REGISTERED ARCHITECT
RUSSELL C. PAGE
STATE OF WASHINGTON

REVISIONS:

NO	DATE	REVISION	BY

Russell C. Page
ARCHITECTS
204 N. Division Street, Suite 'E'
Spokane, WA 99202
(509) 467-3748 Fax: (509) 467-3817

PROJECT:
LIBERTY LAKE RV PARK
LIBERTY LAKE, WA

DRAWINGS:
SITE DEVELOPMENT PLAN

DATE: 6-28-2017

PLOT SCALE: 1" = 20'-0"

DRAWN BY: TDB

JOB NO.: 17-120

SHEET NO.: A1.0

N:\Home\17-120 LIBERTY LAKE RV PARK\SHOP DRAWINGS\17-120 A1.0 - A1.03 SHOP SITE PLANS.dwg, 6/30/2017 12:47:59 PM, DWG To PDF.pc3

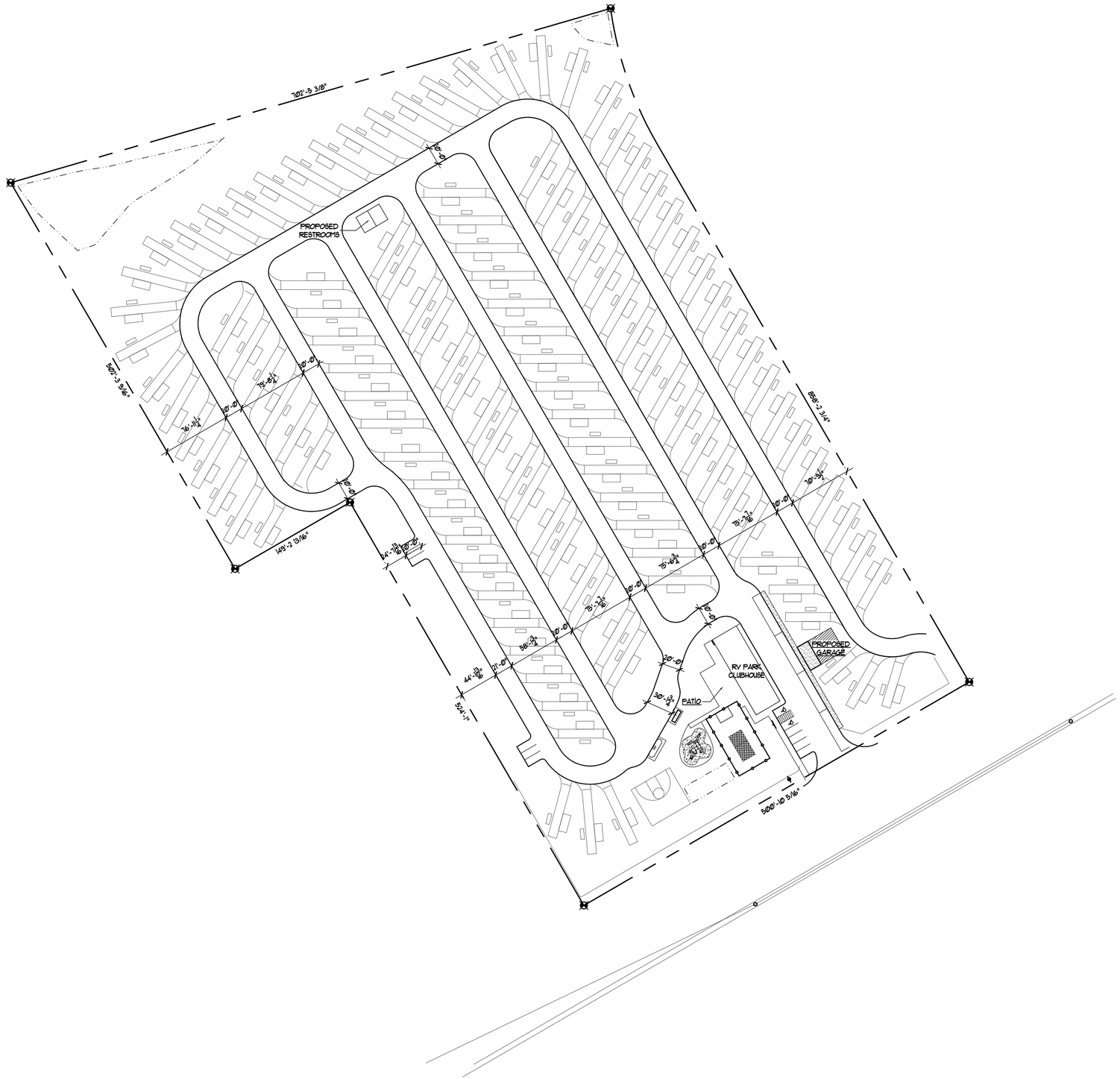

OVERALL SITE PLAN

1" = 60'-0"

NOTE:
This drawing, its contents and information is the property of Russell C. Page Architects. It is not to be copied or reproduced without written permission. The written notes, dimensions, information, details or devices may subject the user to penalties.

3738 REGISTERED ARCHITECT
RUSSELL C. PAGE
STATE OF WASHINGTON

REVISIONS:

NO	DATE	REVISION	BY

Russell C. Page
ARCHITECTS
204 N. Division Street, Suite 'E'
Spokane, WA 99202
(509) 467-3748 Fx: (509) 467-3817

PROJECT:
LIBERTY LAKE RV PARK
LIBERTY LAKE, WA
DRAWINGS:
OVERALL SITE PLAN

DATE: 6-28-2017
PLOT SCALE: 1" = 60'-0"
DRAWN BY: TDB
JOB NO.: 17-120
SHEET NO.: A1.01

DOOR SCHEDULE

NO.	DOOR SIZE			DOOR			FRAME			DETAILS			HD WR	FIRE RATING	REMARKS
(X)	W	H	T	TYPE	MAT.	FIN.	TYPE	MAT.	FIN.	HEAD	JAMB	THRES			
1	3'-0"	7'-0"	1 3/4"	A	WD.	-	F-1	ALUM.	-	7/A9.1	3/A9.1	10/A9.1			
2	8'-0"	9'-8"	1 3/4"	B	ALUM.		F-2	ALUM.		-	-	-			

LEGEND

ALUM	ALUMINUM
FF	FACTORY FIN.
H.M.	HOLLOW METAL
MTL	METAL
P	PAINT
PL	PLASTIC LAMINATE
SS	STAINLESS STEEL
STL	STEEL
S.C.WD	SOLID CORE WOOD
(T)	TEMPERED GLAZING
SV	STAIN AND VARNISH
FAB	FABRIC

WINDOW SCHEDULE

TYPE	MATL.	GLAZING	DETAILS			REMARKS
			HEAD	JAMB	SILL	
A	ALUM.	1" INSUL CLEAR, TEMPERED	1/A9.1	1/A9.1	6/A9.1	

LEGEND

FLOORS:
1. HARDWOOD
2. SHEET VINYL
3. CARPET
4. CERAMIC TILE
5. PEDIGRID FLOOR MAT
6. EXPOSED CONCRETE
7. QUARRY TILE
8. RUBBER FLOORING

BASE:
9. WOOD
10. 6" COVED RUBBER
11. CERAMIC TILE
12. CARPET
13. QUARRY TILE (6")

WALLS:
15. 5/8" TYPE "X" GYPSUM BOARD.
16. ALUM/GLASS STOREFRONT.
17. KEMLITE-FIBERGLASS PANELS.
18. CERAMIC TILE.
19. 5/8" WR. GYPSUM BOARD.
20. WOOD WAINSCOT.
21. VINYL WALL COVERING.
22. C.M.U.
23. 4'-0" CERAMIC TILE WAINSCOT / 5/8" G.W.B. ABOVE.

CEILINGS:
24. 5/8" TYPE "X" GYPSUM BOARD.
25. ACOUSTICAL LAY-IN 2'x4' CORTEGA 15/16" GRID.
26. CONCRETE SPAN DECK.
27. ACOUSTICAL LAY-IN 2'x4' WASHABLE CLG.

FINISHES:
F-1 NONE
F-2 FACTORY
F-3 HARDENER & SEALER (LAPIDOLITH)
F-4 STAIN & VARNISH.
F-5 CLEAR SEALER.
F-6 PAINT (2) COATS ENAMEL.
F-7 PAINT, (1) COAT PRIMER, (2) COATS LATEX.
F-8 WALLPAPER
F-9 FIRE TAPE ONLY
F-10 BROOM FIN. EPOXY SEAL.
F-11 UNFINISHED.
F-12 FACTORY / (2) COATS ENAMEL.

NOTE :
1. CONTRACTOR IS TO VERIFY AND BE RESPONSIBLE FOR ALL FIELD DIMENSIONS, CONDITIONS AND CODE REQUIREMENTS AND NOTIFY THE DESIGNER OF DISCREPANCIES BEFORE PROCEEDING WITH WORK.
2. GLAZING PANELS WITHIN 24" ARC OF EITHER VERTICAL SIDE OF THE DOOR IN A CLOSED POSITION and WHERE THE BOTTOM EXPOSED EDGE OF THE GLAZING IS LESS THAN 60" ABOVE THE WALKING SURFACE SHALL BE SAFETY GLASS.
3. ALL DOORS (INTERIOR & EXTERIOR) ARE TO HAVE LEVER HANDLES UNLESS NOTED OTHERWISE.
4. EXIT DOORS MUST BE OPENABLE FROM THE INSIDE WITHOUT THE USE OF A KEY OR ANY SPECIAL KNOWLEDGE OR EFFORT.
5. ALL THRESHOLD ARE TO BE FLUSH.
6. PANIC HARDWARE SHALL BE PROVIDED IN ASSEMBLY OCCUPANCIES PER IBC SECTION 1008.1.9.

(T) = TEMPERED GLASS

FLAME SPREAD CLASSIFICATION		
ENCLOSED VERTICAL EXITWAY	OTHER EXITWAYS	ROOMS OR AREAS
A 0-25	B 26-75	C 76-200

STOREFRONT DOOR NOTES:
1. VERIFY DOOR FRAME IS UPSIZED TO CARRY ADDITIONAL LOAD.
2. PROVIDE MANUAL FLUSHBOLTS.
3. INSTALL LOCKSET ON EXTERIOR WITH THUMBTURN AT INTERIOR.
4. PROVIDE WEATHERSTRIPPING.

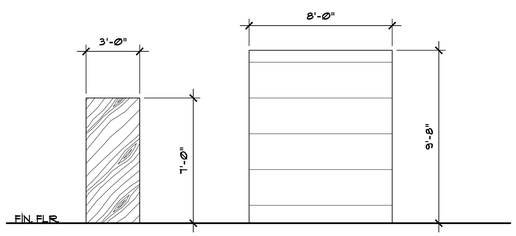

A WD. B S.C.WD

DOOR TYPES
1/4" = 1'-0"

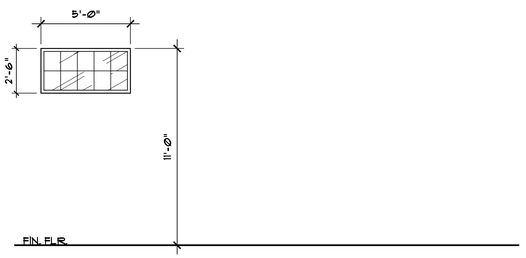

A H.M.

WINDOW TYPES
1/4" = 1'-0"

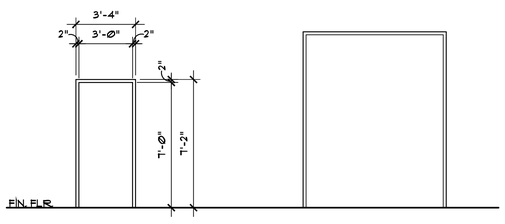

F-1 ALUM. F-2 ALUM.

DOOR/FRAME TYPES
1/4" = 1'-0"

GENERAL NOTES

1. EXTERIOR WALL DIMENSIONS ARE TO OUTSIDE OF SHEATHING.
2. INTERIOR DIMENSIONS ARE TO OUTSIDE OF STUD WALL OR OUTSIDE OF C.M.U.
3. (1) 2A10 BC FIRE EXTINGUISHER TO BE LOCATED AT A MAX TRAVEL DISTANCE OF 75'-0".
4. ALL DOORS TO BE 3'-0" x 7'-0" WITH LEVER HARDWARE (UNLESS PROVIDED WITH PANIC HARDWARE PER DOOR SCHEDULE).

WALL TYPES

W1 EXTERIOR WALL - 2 x 6 WOOD STUD WALL @ 16" O.C. W/ EXTERIOR LAP SIDING OVER PLYWOOD SHEATHING

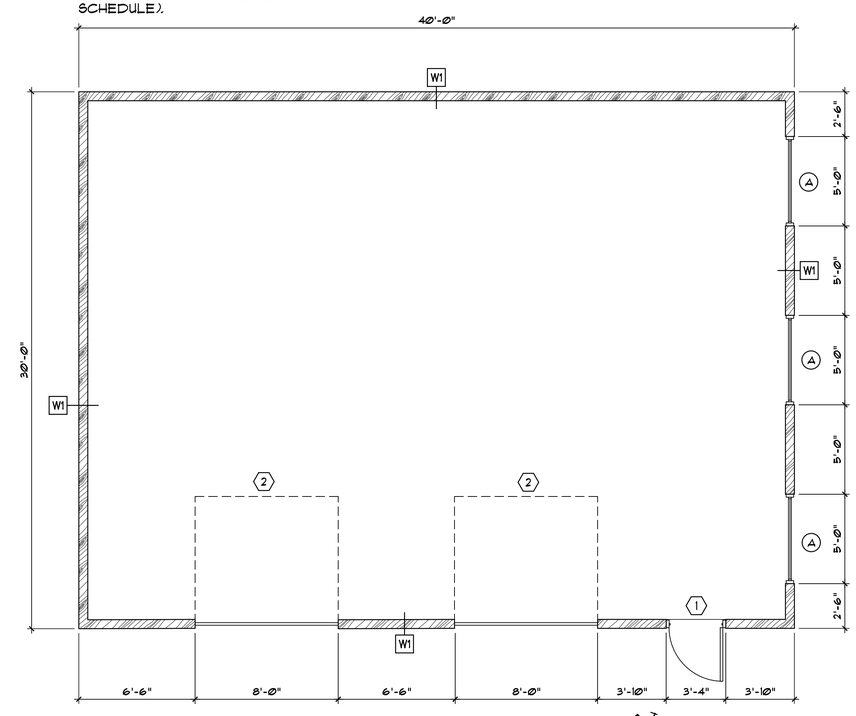

CONSTRUCTION FLOOR PLAN
1/4" = 1'-0"

NOTE:
This drawing, its contents and information is the property of Russell C. Page Architects. It is not to be copied or reproduced without written permission. The information, ideas, and information, details or devices may subject the user to penalties.

3738 REGISTERED ARCHITECT
RUSSELL C. PAGE
STATE OF WASHINGTON

REVISIONS:

NO	DATE	REVISION	BY

Russell C. Page
ARCHITECTS
204 N. Division Street, Suite "E"
Spokane, WA 99202
(509) 467-9748 Fax: (509) 467-9817

PROJECT: LIBERTY LAKE RV PARK
LIBERTY LAKE, WA
DRAWINGS: CONSTRUCTION FLOOR PLAN

DATE: 6-28-2017
PLOT SCALE: 1/4"=1'-0"
DRAWN BY: TDB
JOB NO.: 17-120
SHEET NO.: A2.0

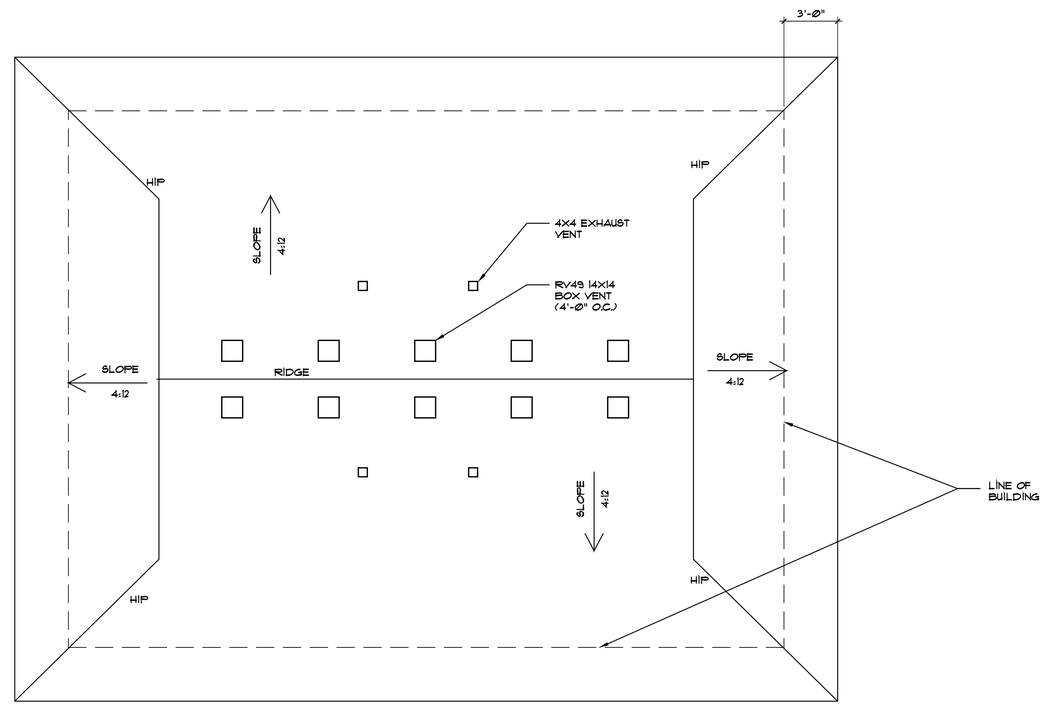

ROOF PLAN

1/4" = 1'-0"

NORTH

NOTE:
This drawing, its contents and information is the exclusive property of Russell C. Page Architects. It is not to be copied or reproduced without written permission. The unauthorized use of this information, details or devices may subject the user to penalties.

3738 REGISTERED ARCHITECT
RUSSELL C. PAGE
STATE OF WASHINGTON

REVISIONS:

NO	DATE	REVISION	BY

Russell C. Page
ARCHITECTS
204 N. Division Street, Suite 'E'
Spokane, WA 99202
(509) 467-9748 Fx: (509) 467-9817

PROJECT:
LIBERTY LAKE RV PARK
LIBERTY LAKE, WA

DRAWINGS:
ROOF PLAN

DATE: 6-28-2017

PLOT SCALE: 1/4"=1'-0"

DRAWN BY: TDB

JOB NO.: 17-120

SHEET NO.: A2.1

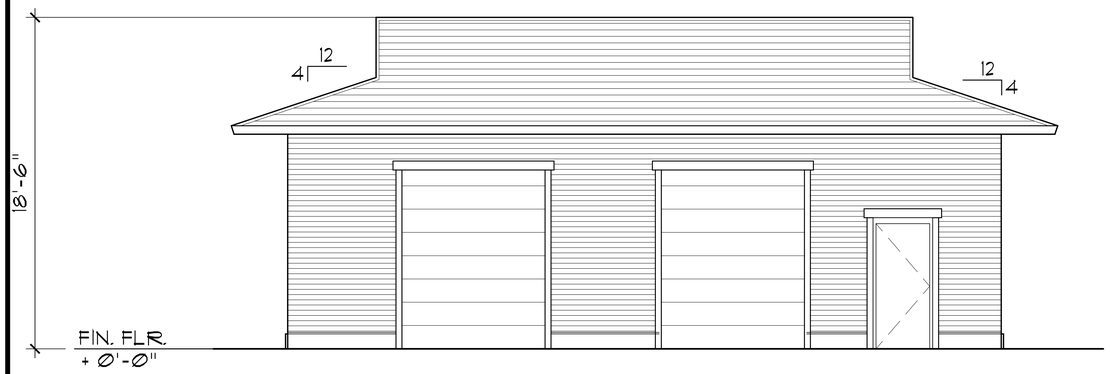

WEST ELEVATION

1/4" = 1'-0"

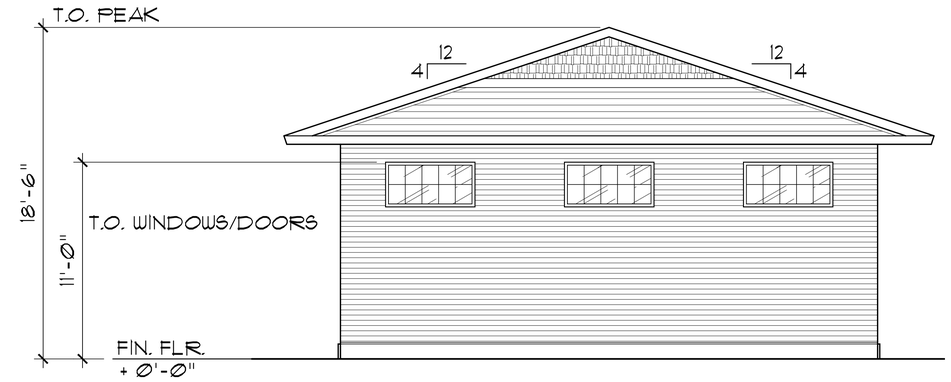

NORTH ELEVATION

1/8" = 1'-0"

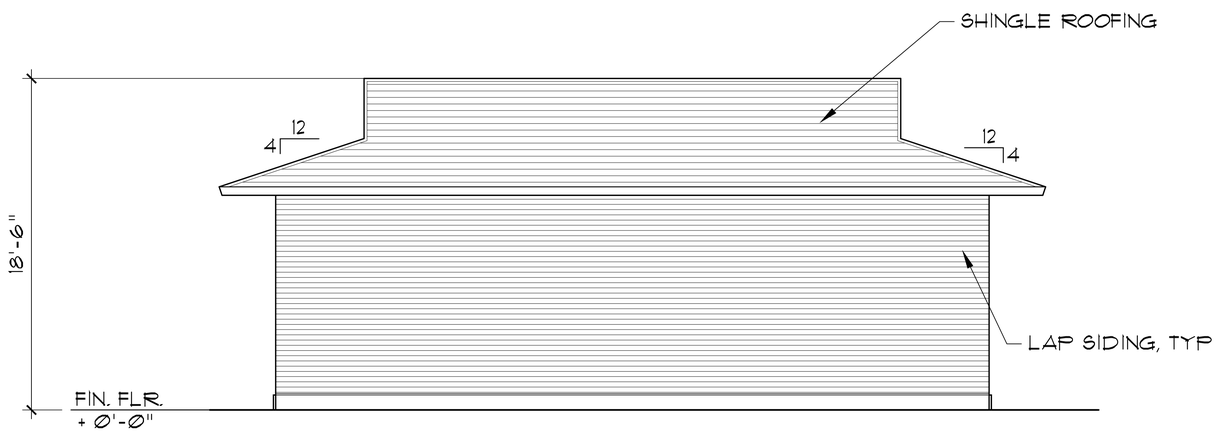

EAST ELEVATION

1/4" = 1'-0"

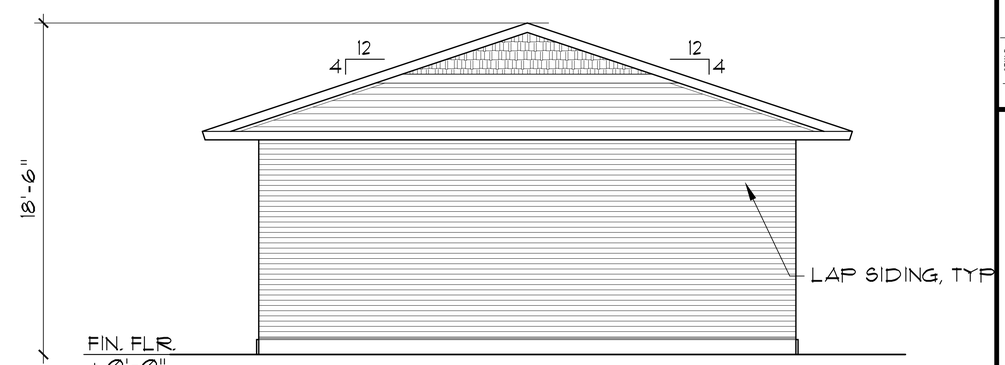

SOUTH ELEVATION

1/8" = 1'-0"

NOTE:
This drawing, its contents and information is the property of Russell C Page Architects. It is not to be copied or used without written permission. The unauthorized use of information and/or drawings may subject the user to penalties.

3738 REGISTERED ARCHITECT
RUSSELL C. PAGE
STATE OF WASHINGTON

REVISIONS:

NO	DATE	REVISION	BY

Russell C. Page
ARCHITECTS
204 N. Division Street, Suite 'E'
Spokane, WA 99202
(509) 467-9748 Fax: (509) 467-9817

PROJECT: LIBERTY LAKE RV PARK

LIBERTY LAKE, WA

DRAWINGS: EXTERIOR ELEVATIONS

DATE: 6-28-2017

PLOT SCALE: 1/4"=1'-0"

DRAWN BY: TDB

JOB NO.: 17-120

SHEET NO.: A3.0

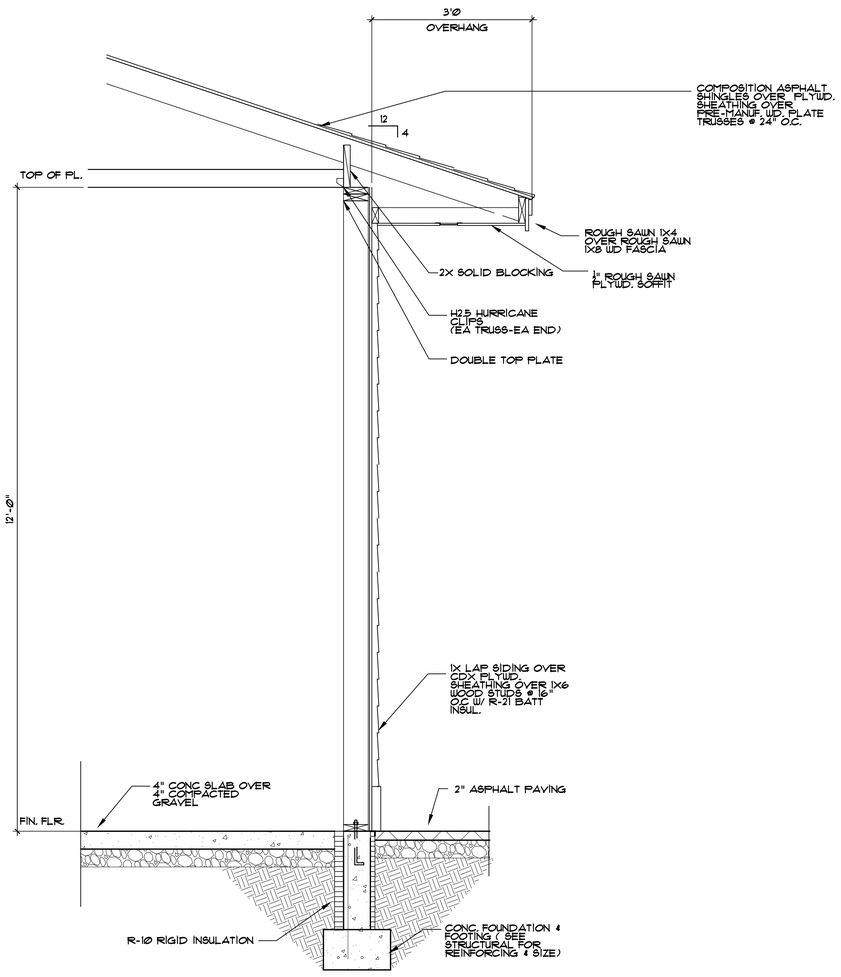

A / A4.1 WALL SECTION

3/4" = 1'-Ø"

NOTE:
This drawing, its contents and information is the property of Russell C. Page Architects. It is not to be copied or reproduced without written permission. The unauthorized use of information, details or devices may subject the user to penalties.

3738 REGISTERED ARCHITECT
RUSSELL C. PAGE
STATE OF WASHINGTON

REVISIONS:

NO	DATE	REVISION	BY

Russell C. Page
ARCHITECTS
204 N. Division Street, Suite 'E'
Spokane, WA 99202
(509) 467-9748 Fax (509) 467-9817

PROJECT: LIBERTY LAKE RV PARK

LIBERTY LAKE, WA

DRAWINGS: WALL SECTIONS

DATE: 6-28-2017

PLOT SCALE: 3/4"=1'-Ø"

DRAWN BY: BAS

JOB NO.: 17-120

SHEET NO.: A4.1

STRUCTURAL - GENERAL NOTES

GENERAL REQUIREMENTS

GOVERNING CODE: The design and construction of this project is governed by the "International Building Code (IBC)", 2015 Edition, hereafter referred to as the IBC, as adopted And modified by the State of Washington understood to be the Authority Having Jurisdiction (AHJ).

REFERENCE STANDARDS: Refer to Chapter 35 of 2015 IBC. Where other Standards are noted in the drawings, use the latest edition of the standard unless a specific date is indicated. Reference to a specific section in a code does not relieve the contractor from compliance with the entire standard.

DESIGN CODE----------2015 IBC & ASCE 7-05

DESIGN LOADS

Roof Live Load----------20 PSF or 300 LB
Required Soil Bearing Capacity (DL+LL)----------2500 PSF

SNOW LOAD DESIGN DATA

Snow Importance Factor----------1.0
Ground Snow Load----------42.85 PSF
Roof Snow Load----------30 PSF
Snow Exposure Factor----------1.0
Snow Thermal Factor----------1.0
Roof Trusses Design
Top Cord Dead Load----------12 PSF
Top Cord Over framing Dead Load----------N/A
Bottom Cord Dead Load----------9.0 PSF

LATERAL FORCE RESISTING SYSTEM

Ordinary Reinforced Masonry Walls

EARTHQUAKE DESIGN DATA

Equivalent Lateral Force Procedure

Seismic Importance Factor----------1.0
Seismic Design Category----------C
Soil Site Classification----------D
Spectral Response Coefficients
SS----------0.41
S1----------0.12
SDS----------0.40
SD1----------0.18
CS(F-B)----------0.139
CS(S-S)----------0.139
R(F-B)----------6.5
R(S-S)----------6.5
Base Shear (F-B)----------Varies
Base Shear (S-S)----------Varies

OCCUPANCY

Risk Category of Building Per 2015 IBC Table 1604.5 = II

WIND DESIGN MAIN WIND FORCE RESISTING SYSTEM

Basic Wind Speed----------71 MPH
Gust Wind Speed----------85 MPH
Exposure Category----------B
Internal Pressure Coefficient----------+/- 0.18 CPI
Topographic Factor----------1.0 KZT
Wind Analysis Procedure Used----------Method 1- Simplified

COMPONENT PRESSURES FOR DESIGN

Uplift Load Net----------6

GENERAL NOTES

ALL MATERIALS AND WORKMANSHIP SHALL CONFORM TO THE DRAWINGS AND THE SPECIFICATIONS (IF ANY). DURING THE CONSTRUCTION PERIOD THE CONTRACTOR SHALL BE RESPONSIBLE FOR THE SAFETY OF THE BUILDING. THE CONTRACTOR SHALL PROVIDE ADEQUATE SHORING, BRACING, AND GUYS IN ACCORDANCE WITH ALL NATIONAL, STATE, AND LOCAL SAFETY ORDINANCES. ANY DEVIATION MUST BE APPROVED PRIOR TO ERECTION. ALL ERECTION PROCEDURES SHALL CONFORM TO OSHA STANDARDS. ANY DEVIATIONS MUST BE APPROVED BY OSHA PRIOR TO ERECTION.

THE CONTRACTOR SHALL BE SOLELY RESPONSIBLE FOR ALL EXCAVATION PROCEDURES INCLUDING LAGGING, SHORING, AND PROTECTION OF ADJACENT PROPERTY, STRUCTURES, STREETS, AND UTILITIES IN ACCORDANCE WITH ALL NATIONAL, STATE, AND LOCAL SAFETY ORDINANCES.

THE CONTRACTOR SHALL BE RESPONSIBLE FOR COORDINATING THE WORK OF ALL TRADES AND SHALL CHECK ALL DIMENSIONS. ALL DISCREPANCIES SHALL BE CALLED TO THE ATTENTION OF THE ENGINEER AND BE RESOLVED BEFORE PROCEEDING WITH THE WORK.

SHOP DRAWINGS REQUIRED BY THESE NOTES SHALL BE SUBMITTED TO THE ENGINEER FOR REVIEW PRIOR TO FABRICATION.

DRAWINGS INDICATE GENERAL AND TYPICAL DETAILS OF CONSTRUCTION. WHERE CONDITIONS ARE NOT SPECIFICALLY INDICATED BUT ARE OF SIMILAR CHARACTER TO DETAILS SHOWN, SIMILAR DETAILS OF CONSTRUCTION SHALL BE USED SUBJECT TO REVIEW BY THE ENGINEER.

SEE ARCHITECTURAL DRAWINGS FOR SIZE AND LOCATION OF ALL FLOOR AND WALL OPENINGS, FLOOR FINISHES, ETC. REPORT ANY DISCREPANCIES BETWEEN ARCHITECTURAL AND STRUCTURAL DRAWINGS TO THE ENGINEER. SEE MECHANICAL, PLUMBING, AND ELECTRICAL DRAWINGS FOR SIZE AND LOCATION OF ALL OPENINGS REQUIRED FOR DUCTS, PIPES AND ALL PIPE SLEEVES, ELECTRICAL CONDUIT, AND OTHER ITEMS TO BE EMBEDDED IN CONCRETE OR OTHERWISE INCORPORATED IN STRUCTURAL WORK.

PROVIDE OPENINGS AND SUPPORTS, AS REQUIRED FOR HEATERS, MECHANICAL EQUIPMENT, VENTS, DUCTS, PIPING, ETC. ALL SUSPENDED MECHANICAL EQUIPMENT TO BE SWAY OR LATERALLY BRACED.

ALL INFORMATION SHOWN ON THE DRAWINGS RELATIVE TO EXISTING CONDITIONS IS GIVEN AS THE BEST PRESENT KNOWLEDGE, BUT WITHOUT GUARANTEE OF ACCURACY. WHERE ACTUAL CONDITIONS CONFLICT WITH THE DRAWINGS THEY SHALL BE REPORTED TO THE ENGINEER SO THAT THE PROPER REVISIONS MAY BE MADE. MODIFICATION OF DETAILS OF CONSTRUCTION SHALL NOT BE MADE WITHOUT WRITTEN APPROVAL OF THE ENGINEER.

ARCHITECTURAL AND MECHANICAL PLANS ARE CONSIDERED A PART OF THE STRUCTURAL DESIGN DRAWINGS AND ARE TO BE USED TO DEFINE DETAIL CONFIGURATIONS INCLUDING, BUT NOT LIMITED TO RELATIVE LOCATION AT MEMBERS, ELEVATIONS, LOCATION OF ALL OPENINGS, ETC., AND MUST BE USED IN THE DEVELOPMENT OF SHOP DRAWINGS. MECHANICAL UNITS AND SPRINKLER LINES LARGER THAN 3 INCHES THAT ARE TO BE SUPPORTED BY THE ROOF OR FLOOR STRUCTURE MAY CHANGE THE SIZES OF THE FRAMING MEMBERS THAT SUPPORT THESE ITEMS. SHOP DRAWINGS SHOWING LOCATION, SIZE AND WEIGHT OF THESE ITEMS SHALL BE SUBMITTED TO THE ROOF JOIST MANUFACTURER AND THE ENGINEER PRIOR TO INSTALLATION OF THE STRUCTURE SO THAT MEMBER SIZES MAY BE VERIFIED AND CHANGED IF NECESSARY.

SKYLIGHT AND STOREFRONT CONTRACTORS SHALL SUBMIT STRUCTURAL DESIGN CALCULATIONS AND DRAWINGS FOR ALL FRAMING MEMBERS AND CONNECTIONS (INCLUDING CONNECTIONS TO STRUCTURAL MEMBERS), TO STRUCTURAL ENGINEER AND BUILDING DEPARTMENT FOR THEIR APPROVAL PRIOR TO FABRICATION. CALCULATIONS AND DRAWINGS SHALL COMPLY WITH ALL REQUIREMENTS OF LATEST APPLICABLE BUILDING CODE. THESE DRAWINGS SHALL BE DESIGNED AND SIGNED BY A ENGINEER REGISTERED IN THE STATE OF WASHINGTON.

FOUNDATIONS

ALL FOOTINGS SHALL BEAR ON NATIVE SOIL OR COMPACTED STRUCTURAL FILL. ALL FOOTINGS AND GRADE BEAMS SHALL BE PLACED A MINIMUM OF 24 INCHES BELOW GRADE UNLESS NOTED OTHERWISE ON THE DRAWINGS.

FILL UNDER FOOTINGS AND SLABS SHALL BE COMPACTED TO 95% MINIMUM OF MAXIMUM DRY DENSITY PER ASTM D-1557. COMPACTION OF FILL SHALL BE IN LIFTS NOT TO EXCEED 8 INCHES LOOSE THICKNESS. EACH LIFT SHALL BE TESTED FOR COMPLIANCE WITH COMPACTION REQUIREMENTS BY AN APPROVED LABORATORY.

THE FOUNDATION DESIGN IS BASED ON ASSUMPTIONS DRAWN FROM KNOWN SITE CONDITIONS. IT IS RECOMMENDED THAT THESE ASSUMPTIONS BE VERIFIED BY A QUALIFIED GEOTECHNICAL ENGINEER. THE OWNER SHALL BE RESPONSIBLE FOR RETAINING A GEOTECHNICAL ENGINEER AND TO PRESENT CONFLICTING INFORMATION TO JRBE SO THAT PROPER REVISIONS MAY BE MADE IF REQUIRED. INADEQUATE BEARING SOILS MAY CAUSE EXCESSIVE SETTLEMENTS OF THE FOUNDATION. JRBE DOES NOT ASSUME LIABILITIES ASSOCIATED WITH INADEQUATE SOIL CONDITIONS LOCATED ON THE SITE. IF A GEOTECHNICAL REPORT IS PROVIDED, FOUNDATION WORK SHALL BE PERFORMED IN ACCORDANCE WITH THIS REPORT. THE REPORT IS PART OF THIS PLAN AND SHOULD BE KEPT ON THE JOB SITE AT ALL TIMES.

FOUNDATION EXCAVATIONS SHALL BE EXAMINED AND CERTIFIED BY THE SOILS ENGINEER OR THE OWNERS REPRESENTATIVE PRIOR TO THE PLACEMENT OF ANY REINFORCING STEEL OR CONCRETE.

MATERIAL FOR FILLING AND BACKFILLING SHALL CONSIST OF THE EXCAVATED MATERIAL AND/OR IMPORTED BORROW AND SHALL BE FREE OF ORGANIC MATTER, TRASH, LUMBER, OR OTHER DEBRIS. FILL AND BACKFILL SHALL BE DEPOSITED IN LAYERS NOT TO EXCEED 8 INCHES THICK. PROPERLY MOISTEN ALL BACKFILL MATERIAL TO APPROXIMATE OPTIMUM REQUIREMENTS AND THOROUGHLY ROLL OR COMPACT WITH APPROVED EQUIPMENT IN SUCH A MANNER AND EXTENT AS TO PRODUCE A RELATIVE COMPACTION OF 95% OF MAXIMUM DRY DENSITY FOR OPTIMUM MOISTURE CONTENT AS DETERMINED BY ASTM D-1557 METHOD OF COMPACTION. HAND TAMPERS SHALL WEIGH AT LEAST 60 LBS. EACH AND SHALL HAVE A FACE AREA NOT IN EXCESS OF 64 SQUARE INCHES. HAND TAMPER MAY BE OPERATED EITHER MANUALLY OR MECHANICALLY AND SHALL BE USED WHERE LARGER POWER DRIVEN COMPACTION EQUIPMENT CANNOT BE USED. BACKFILL AROUND THE EXTERIOR WALLS SHALL NOT BE PLACED UNTIL AFTER THE WALLS ARE SUPPORTED BY THE COMPLETION OF BRACING SYSTEMS. BACKFILL SHALL NOT BE PLACED UNTIL AFTER COMPLETION AND INSPECTION OF DAMP PROOFING.

CONCRETE

ALL CAST IN PLACE CONCRETE SHALL MEET THE FOLLOWING REQUIREMENTS: QUALITY OF CONCRETE SHALL BE DETERMINED BY CHAPTER 19, 2015 IBC. MINIMUM 28 DAY COMPRESSIVE STRENGTH SHALL BE AS NOTED BELOW FOR SEVERE EXPOSURE PER 2015 IBC TABLE 1904.2 ALL METHODS AND MATERIALS SHALL BE PER THE 2015 IBC. SUBMIT MIX DESIGNS TO STRUCTURAL ENGINEER FOR REVIEW PRIOR TO POURING CONCRETE.

MIX DESIGN REQUIREMENTS.

	SPECIFED 28-DAY COMPRESSIVE STRENGTH	MAXIMUM AGGREGATE SIZE	MAX. W/C RATIO	AIR CONT. (%)	MAX. FLY ASH CONTENT (%)	SLUMP (INCHES)
FOOTINGS	3000 PSI	1 INCH	0.45	6.0	15.0	3-4
FOUNDATION WALLS	3000 PSI	3/4 INCH	0.45	6.0	15.0	3-4
INTERIOR SLAB-ON-GRADE	3000 PSI	3/4 INCH	0.50	-	15.0	3-4
EXTERIOR SLAB-ON-GRADE	3000 PSI	3/4 INCH	0.50	3.0	15.0	3-4

CONCRETE SHALL BE MAINTAINED IN A MOIST CONDITION FOR A MINIMUM OF SEVEN (7) DAYS AFTER PLACEMENT. ALTERNATE METHODS WILL BE APPROVED IF SATISFACTORY PERFORMANCE CAN BE ASSURED.

KEYED CONSTRUCTION JOINTS SHALL BE USED IN ALL CASES EXCEPT SLABS ON GRADE. ALL CONSTRUCTION JOINTS SHALL BE THOROUGHLY CLEANED AND ALL LAITANCE SHALL BE REMOVED. ALL VERTICAL JOINTS SHALL BE THOROUGHLY WETTED AND SLUSHED WITH A COAT OF NEAT CEMENT IMMEDIATELY BEFORE PLACING NEW CONCRETE.

SLABS ON GRADE: SLABS SHALL HAVE THICKNESS PER PLAN AND BE PLACED OVER 4" OF 5/8" MINUS CRUSHED ROCK, UNLESS DIRECTED OTHER-WISE BY SOILS REPORT. POUR JOINTS SHALL HAVE #4 SMOOTH STRAIGHT DOWELS X 24" AT 12" SPACING ACROSS THE COLD JOINT. THESE DOWELS SHALL BE COATED WITH GREASE ON ONE SIDE TO PREVENT BONDING, OR COVERED WITH A PAPER OR PLASTIC SLEEVE. CRACK CONTROL JOINTS SHALL BE PLACED AT 15 FEET ON CENTER MAXIMUM IN EACH DIRECTION. ACCEPTABLE JOINTS SHALL BE EITHER A POUR JOINT AS NOTED ABOVE, ZIP-STRIP INSTALLED PER MANUFACTURERS RECOMMENDATIONS, OR SAW CUTS 1/8" X 1/4 OF THE SLAB THICKNESS (BUT NOT LESS THAN 1"). IF SAW CUTS ARE TO BE USED, THE CUT MUST BE MADE AS SOON AS THE SLAB WILL SUPPORT THE SAW AND THE SAW WILL NOT RAVEL THE CUT (THIS IS USUALLY 4 TO 12 HOURS AFTER FINISHING). CONTROL JOINTS SHALL OCCUR AT RE-ENTRANT CORNERS OR AT OTHER ABRUPT CHANGES IN DIMENSIONS. JOINTS SHALL INTERSECT COLUMN CENTERLINES, AND AT COLUMNS, BE IN A DIAMOND PATTERN.

PIPES OTHER THAN ELECTRICAL CONDUITS SHALL NOT BE EMBEDDED IN STRUCTURAL CONCRETE EXCEPT WHERE SPECIFICALLY APPROVED.

PROVIDE TESTING PER 2015 IBC, SECTION 17 AS REQUIRED PER SPECIAL INSPECTIONS. SEE SPECIAL INSPECTIONS SECTION. IF SPECIAL INSPECTION IS NOT REQUIRED AND MIX DESIGNS WITH NO HISTORICAL CYLINDER BREAK DATA IS PROVIDED, PROVIDE ONE SET OF 3 CYLINDER TESTS FOR EACH TYPE OF CONCRETE PLACED (EACH MIX DESIGN) PER ACI 318-05 SECTION 5.6.2, OR PER LOCAL BUILDING DEPARTMENT REQUIREMENTS. COPIES OF TEST REPORTS SHALL BE SENT TO THE ENGINEER AND THE BUILDING DEPARTMENT.

REINFORCING

REINFORCEMENT SHALL BE DEFORMED BARS IN ACCORDANCE WITH ASTM A-615 GRADE 60 AND MADE FROM NEW BILLETS. REINFORCING TO BE WELDED SHALL BE ASTM A-615 GR. 60 WITH A CARBON EQUIVALENT (C.E.) OF 0.55 OR LESS, OR ASTM A-706.

WELDED WIRE FABRIC SHALL BE IN ACCORDANCE WITH ASTM A-185. WIRE MESH SHALL LAP ONE FULL MESH AT SIDES AND ENDS.

LAP ALL REINFORCING BARS 48 DIAMETERS AT ALL SPLICES, CORNERS, AND INTERSECTING WALLS, UNLESS NOTED OTHERWISE. COVER OVER REINFORCEMENT SHALL BE A MINIMUM OF 3 INCHES FOR CONCRETE PLACED ON GROUND, 2 INCHES FOR CONCRETE EXPOSED TO GROUND OR WEATHER AFTER REMOVAL OF FORMS, AND 1 1/2 INCHES UNLESS NOTED OTHERWISE. ANCHOR BOLTS, DOWELS, AND OTHER EMBEDDED ITEMS TO BE SECURELY TIED IN PLACE BEFORE CONCRETE IS POURED. SUBMIT SHOP DRAWINGS TO THE ENGINEER FOR REVIEW BEFORE FABRICATION.

ANCHOR RODS

ALL ANCHOR RODS SHALL BE SHALL BE HEADED OR HOOKED AND SHALL BE PER ASTM F1554, GRADE 36 UNLESS SPECIFICALLY NOTED OTHERWISE ON THE PLAN DRAWINGS.

POWERS WEDGE ANCHOR BOLTS OR EQUAL SHALL BE INSTALLED AT SHEARWALLS PER MANUFACATURERES RECOMMENDATIONS; SPECIAL INSPECTION IF NOTED.

READHEAD TRUBOLT CARBON STEEL WEDGE ANCHORS OR EQUAL MAY BE INSTALLED AT NON-SHEARWALL APPLICATIONS. INSTALL PER MANUFACTURERS RECOMMENDATIONS; SPECIAL INSPECTION IF NOTED.

STRUCTURAL TIMBER

LUMBER SHALL BE DOUG-FIR #2 GRADE, E=1500000 PSI, UNLESS NOTED OTHERWISE. STUDS SHALL BE DOUG- FIR #3 OR STUD GRADE E=1400000 PSI. ALL LUMBER SHALL BE GRADED AND STAMPED PER WWPA AND THE 2015 IBC. ALL LUMBER SHALL BE SEASONED WITH A MOISTURE CONTENT NOT OVER 19% (SEE SPECIAL INSPECTIONS @ ROOF FRAMING). NAIL ALL FRAMING PER TABLE 2304.10.1, IBC 2015, UNLESS NOTED OTHERWISE. ALL WOOD EXPOSED TO WEATHER OR IN CONTACT WITH CONCRETE OR MASONRY SHALL BE PRESSURE TREATED WITH A WATER BORNE PRESERVATIVE IN ACCORDANCE WITH THE STANDARD SPECIFICATIONS OF THE AMERICAN WOOD PRESERVATIVE ASSOCIATION. PAINT CUTS MADE AFTER TREATMENT WITH 2 BRUSH COATS OF THE PRESERVATIVE.

SUBSTITUTIONS FOR FRAMING HARDWARE SHALL NOT BE USED UNLESS APPROVED. NO STRUCTURAL MEMBER SHALL BE CUT OR NOTCHED UNLESS SPECIFICALLY SHOWN, NOTED, OR APPROVED BY THE STRUCTURAL ENGINEER. USE DOUBLE JOISTS UNDER WALLS OR PARTITIONS PARALLEL TO JOISTS. SOLID BLOCK UNDER PARTITIONS PERPENDICULAR TO JOISTS. PROVIDE WASHERS UNDER HEADS AND NUTS OF ALL BOLTS BEARING ON WOOD. DO NOT PROVIDE WASHERS UNDER HEADS OF LAG SCREWS. SUSPENDED CEILINGS, SPRINKLERS, DROP SOFFITS OR ANY SIMILAR ELEMENTS SHALL NOT BE SUPPORTED BY 2 X 4 RAFTERS EXCEPT AS DETAILED.

PLYWOOD

PLYWOOD SHALL BE DOUGLAS FIR WITH APA STAMP ON EACH SHEET, GRADE, PANEL SPAN RATING, AND THICKNESS TO BE AS SHOWN ON THE DRAWINGS. PLYWOOD SHALL CONFORM TO THE 2015 IBC. SEE SPECIAL INSPECTIONS.

WOOD WEB/WOOD CHORD TRUSSES

TRUSSES SHALL BE MANUFACTURED WITH WOOD WEBS AND CHORDS. LUMBER SHALL BE STRESS-RATED AND KILN DRIED TO A MOISTURE CONTENT OF 19% OR LESS. TRUSS JOINTS SHALL BE MADE WITH GALVANIZED STEEL 'TOOTHED' PLATES PRESSED INTO BOTH SIDES OF THE WOOD MEMBERS.

TRUSSES SHALL BE DESIGNED TO FIT DIMENSIONS SHOWN ON THE PLANS AND FOR LOADS SHOWN ABOVE; INCLUDE ANY CONCENTRATED MECHANICAL LOADS ON ROOF (VERIFY WEIGHT AND LOCATION WITH MECHANICAL CONTRACTOR). ALL DESIGNS SHALL BE IN ACCORDANCE WITH ALLOWABLE VALUES ASSIGNED BY A CURRENT IBC EVALUATION REPORT. DEFLECTION DUE TO TOTAL LOAD SHALL BE LIMITED TO SPAN/360

SHOP DRAWINGS SHALL BE SUBMITTED TO THE ENGINEER AND LOCAL BUILDING OFFICIAL FOR REVIEW, PRIOR TO FABRICATION. SHOP DRAWINGS SHALL BE STAMPED BY AN ENGINEER REGISTERED IN THE STATE OF WASHINGTON WHO IS RESPONSIBLE FOR THE DESIGN. THE MANUFACTURER SHALL DESIGN AND PROVIDE ALL REQUIRED BRIDGING AND BRACING BETWEEN THE TRUSSES.

TRUSSES SHALL BE ERECTED AND INSTALLED IN ACCORDANCE WITH THE PLANS, APPROVED SHOP DRAWINGS AND MANUFACTURER'S INSTALLATION SUGGESTIONS. CONTRACTOR SHALL NOTIFY THE ENGINEER PRIOR TO ENCLOSING THE TRUSSES TO PROVIDE OPPORTUNITY FOR REVIEW OF THE INSTALLATION. CUTTING OR FIELD ALTERATION OF TRUSSES IS NOT PERMITTED.

NOTE:
This drawing, its contents and information is the property of Russell C. Page Architects. It is not to be copied or reproduced without written consent. Any unauthorized use of information, details or devices may subject the user to penalties.

3738 REGISTERED ARCHITECT RUSSELL C. PAGE STATE OF WASHINGTON

REVISIONS:

NO	DATE	REVISION	BY

Russell C. Page
ARCHITECTS
204 N. Division Street, Suite'E'
Spokane, WA 99202
(509) 467-9748 fax (509) 467-9317

PROJECT: LIBERTY LAKE RV PARK
LIBERTY LAKE, WA
DRAWINGS: GENERAL NOTES

DATE: 6-28-2017
PLOT SCALE: AS NOTED
DRAWN BY:
JOB NO.: 17-120
SHEET NO.: S0.1

ROOF FRAMING PLAN NOTES:

1. VERIFY ALL DIMENSIONS AND ELEVATIONS WITH ARCHITECT'S DRAWINGS.
2. ALL DUCTS, CHASES AND PIPES SHALL BE PER MECHANICAL, PLUMBING, ELECTRICAL AND SPRINKLER DRAWINGS. STAIR DETAILS AND GUARDRAILS PER ARCHITECTURAL DRAWINGS.
3. ROOF SHEATHING PER PLAN AND STRUCTURAL GENERAL NOTES. SHEATHING TO BE NAILED TO ROOF FRAMING WITH Ø.131"øX2-1/2" NAILS @ 6" O.C. AT PANEL EDGES AND @ 12" O.C. FIELD.UNO. LAY SHEATHING WITH FACE GRAIN (LONG DIRECTION) PERPENDICULAR TO SUPPORTS AND STAGGER PANEL END JOINTS. ALLOW 1/8" SPACE BETWEEN PANEL ENDS AND EDGES.
4. HEADERS SHOWN BUT NOT SPECIFIED ARE TO BE (2) 2X10 MINIMUM. HEADER SUPPORTS PER STUD AND SHEAR WALL PLAN ON FLOOR BELOW.
5. BEAMS ARE FRAMED WITH JOISTS UNLESS NOTED OTHERWISE ON DETAILS, OR ON PLANS AS "DB" INDICATING THAT DROPPED BEAM FRAMING IS REQUIRED. BEAM SUPPORTS PER STUD AND SHEAR WALL PLAN ON LEVEL BELOW.
6. PROVIDE SOLID BLOCKING OVER ALL SHEAR WALLS AND BEARING WALLS. AT SHEAR WALLS PARALLEL TO FRAMING, ALIGN JOIST OR TRUSS OVER SHEAR WALL (ADDITIONAL JOISTS OR TRUSSES MAY BE REQUIRED).
7. HORIZONTAL STRAP TIES INDICATED ON THE FRAMING PLAN ARE TO BE CENTERED OVER WALL TOP PLATE AND/OR HEADER, BLOCKING OR BEAM. NAILING REQUIREMENTS PER STRAP MANUFACTURER SPECIFICATIONS.

GENERAL NOTE:

PRIOR TO ERECTION, STRUCTURAL SHOP DRAWINGS FROM THE WOOD TRUSS MANUFACTURERS SHALL BE SUBMITTED TO THE BUILDING AND PLANNING DEPARTMENT AFTER BEING REVIEWED BY ARCHITECT/ENGINEER OF RECORD. (2 SETS)

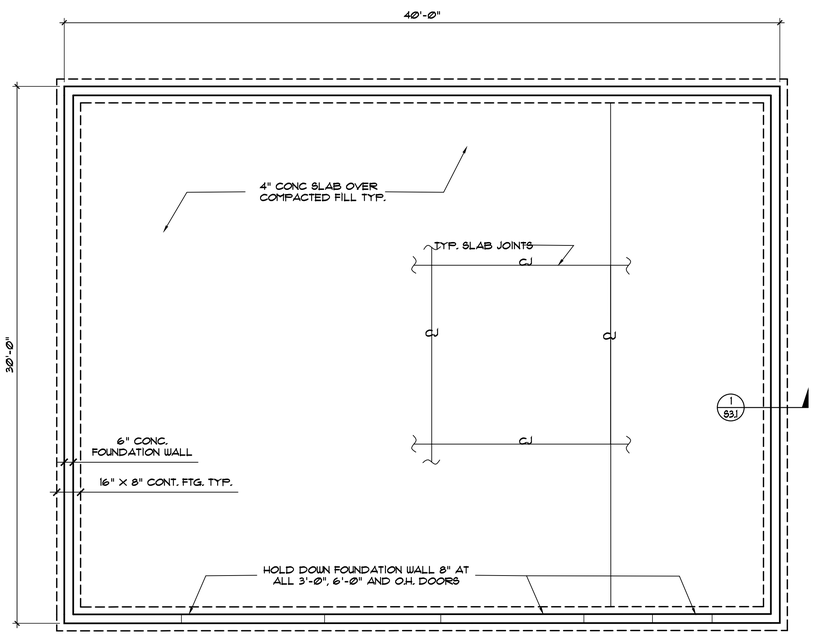

FOUNDATION PLAN

1/4" = 1'-0"

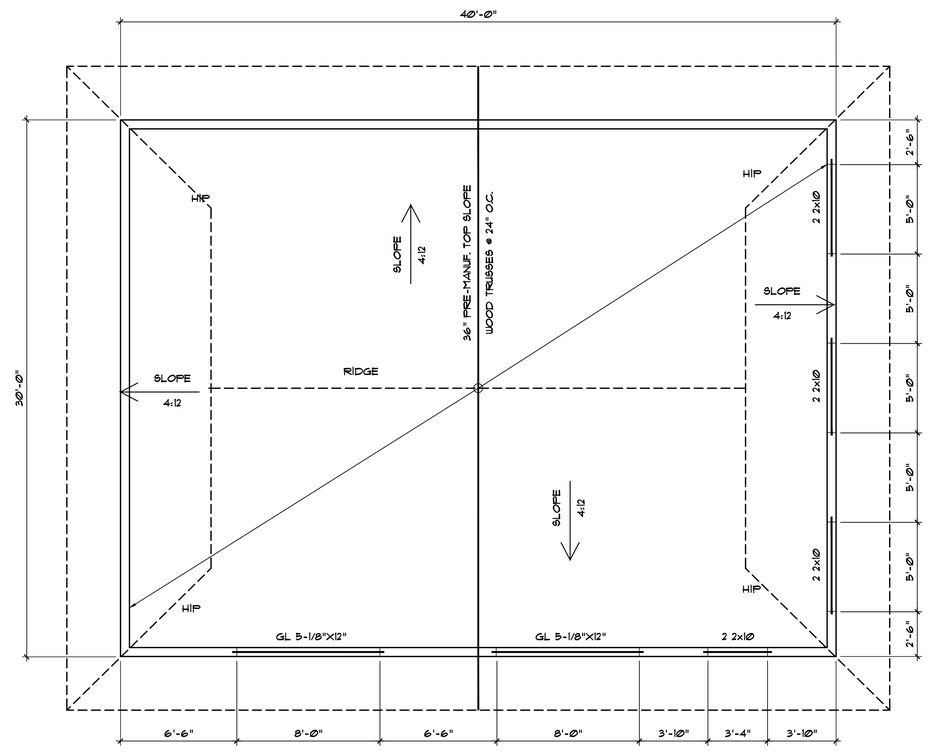

ROOF FRAMING PLAN

1/4" = 1'-0"

NOTE:
This drawing, its contents and information is the property of Russell C. Page Architects. It is not to be copied or reproduced without written permission. The unauthorized use of this information, details or devices may subject the user to penalties.

REGISTERED ARCHITECT
3738
RUSSELL C. PAGE
STATE OF WASHINGTON

REVISIONS:

NO	DATE	REVISION	BY

Russell C. Page
ARCHITECTS
204 N. Division Street, Suite'E'
Spokane, WA 99202
(509) 467-9748 Fx: (509) 467-9817

PROJECT: LIBERTY LAKE RV PARK
LIBERTY LAKE, WA
DRAWINGS: FOUNDATION PLAN + ROOF FRAMING PLAN

DATE: 6-28-2017
PLOT SCALE: 1/4"=1'-0"
DRAWN BY: TDB
JOB NO.: 17-120
SHEET NO.: S2.0

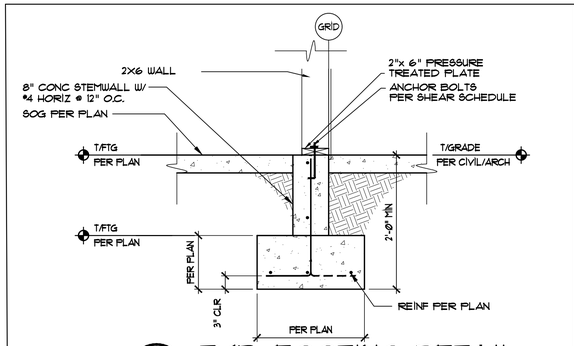

1 / S3.0 TYP. FOOTING DETAIL

3/4" = 1'-0"

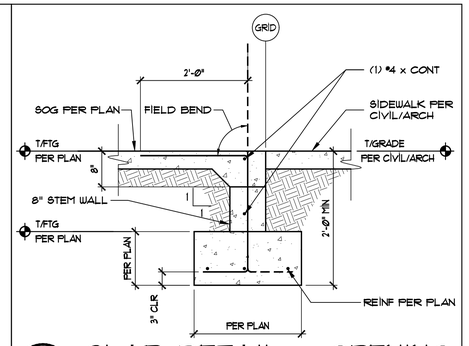

2 / S3.0 SLAB DETAIL @ OPENING

3/4" = 1'-0"

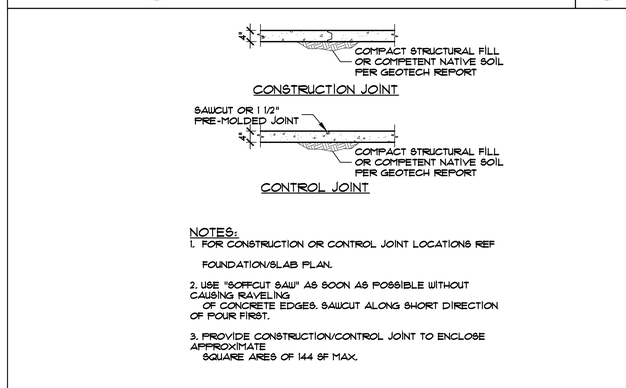

NOTES:

1. FOR CONSTRUCTION OR CONTROL JOINT LOCATIONS REF FOUNDATION/SLAB PLAN.
2. USE "SOFFCUT SAW" AS SOON AS POSSIBLE WITHOUT CAUSING RAVELING OF CONCRETE EDGES. SAWCUT ALONG SHORT DIRECTION OF POUR FIRST.
3. PROVIDE CONSTRUCTION/CONTROL JOINT TO ENCLOSE APPROXIMATE SQUARE AREA OF 144 SF MAX.

3 / S3.0 TYP SLAB ON GRADE JOINT

3/4" = 1'-0"

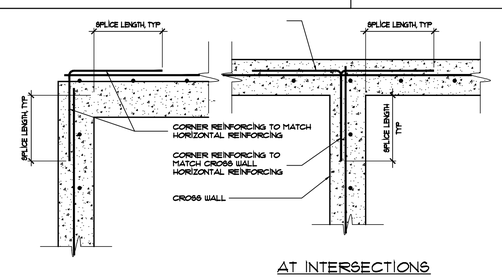

NOTES:

1. LAP LENGTHS PER REINFORCING LAP SPLICE AND DEVELOPMENT LENGTH SCHEDULE FOR CMU.
2. WALL REINFORCING PER ELEVATIONS, SECTIONS AND DETAILS.
3. CORNER REINFORCING AT FOOTING AND STEM WALLS TO MATCH FOOTING AND STEMWALL HORIZONTAL REINFORCING.

4 / S3.0 TYP CORNER REINF. @ CONC. WALL

3/4" = 1'-0"

CONCRETE

BAR SIZE	TOP BARS Ld	TOP BARS CLASS A	TOP BARS CLASS B	OTHER BARS Ld	OTHER BARS CLASS A	OTHER BARS CLASS B
f'c=3,000 psi						
#3	16	16	21	13	13	16
#4	22	22	28	17	17	22
#5	27	27	35	21	21	27
#6	32	32	42	25	25	32
#7	32	32	49	29	29	38
#8	43	43	56	33	33	43
#9	48	48	63	37	37	48
#10	53 / 58	53 / 58	69 / 76	35 / 45	35 / 45	53 / 58

MASONRY

BAR SIZE	LAP LENGTH
#3	18
#4	24
#5	30
#6	36
#7	42

NOTES:

1. DEVELOP ALL BARS INTO SLABS, BEAMS, OR COLUMNS WITH Ld MINIMUM.
2. SCHEDULE ABOVE APPLIES TO CATEGORY 6 BAR DEVELOPMENT AND LAPSPLICE LENGTHS PER LATEST EDITION OF ACI 318. REFER TO DRAWINGS FOR SPECIAL CASES.
3. TOP BARS ARE BARS WITH MORE THAN 12" OF FRESH CONCRETE BELOW OR AS NOTED ON THE DOCUMENTS AS "TOP BARS".
4. UNLESS NOTED OTHERWISE, ALL LAPS SHALL BE MINIMUM CLASS B SPLICE.
5. PROVIDE 48 BAR DIAMETERS MINIMUM LAP FOR ALL MASONRY BAR SPLICES.

5 / S3.0 LAP SPLICE & DEVELOP.

NTS

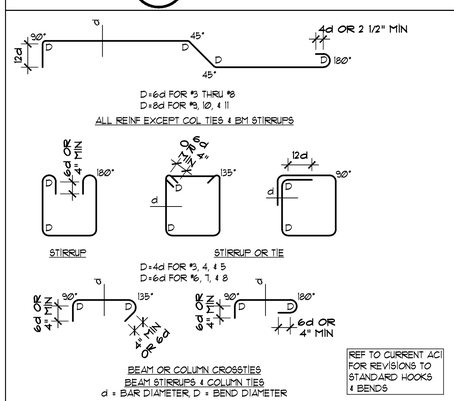

6 / S3.0 STND HOOKS & BENDS

NTS

Standard Hooks & Bends.dwg

NOTE:
This drawing, its contents and information is the property of Russell C. Page Architects. It is not to be copied or reproduced without written permission. The information, designs, diagrams, details or devices may subject the user to penalties.

REGISTERED ARCHITECT
3738
RUSSELL C. PAGE
STATE OF WASHINGTON

REVISIONS:

NO	DATE	REVISION	BY

Russell C. Page
ARCHITECTS
204 N. Division Street, Suite 'E'
Spokane, WA 99202
(509) 467-9748 Fx: (509) 467-9817

PROJECT: LIBERTY LAKE RV PARK
LIBERTY LAKE, WA
DRAWINGS: FOUNDATION DETAILS

DATE: 6-28-2017
PLOT SCALE: AS NOTED
DRAWN BY: BAS
JOB NO.: 17-120
SHEET NO.: S3.0

N:\Home\17-120 LIBERTY LAKE RV PARK\SHOP DRAWINGS\17-120 S1.0 SHOP FOUNDATION DETAILS.dwg, 6/30/2017 12:30:03 PM, DWG To PDF.pc3

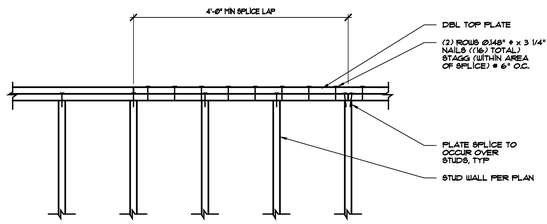

1 S3.1 TYP. PLATE SPLICE DETAIL

NOT TO SCALE

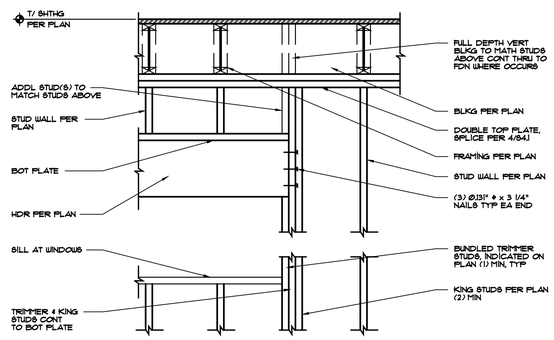

2 S3.1 TYPICAL HEADER

3/4" = 1'-0"

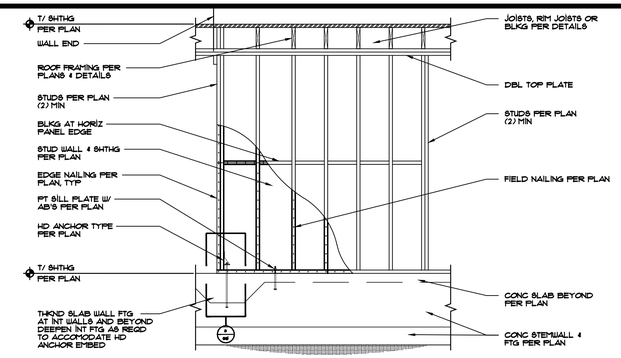

3 S3.1 TYPICAL SHEAR WALL ELEVATION

N.T.S.

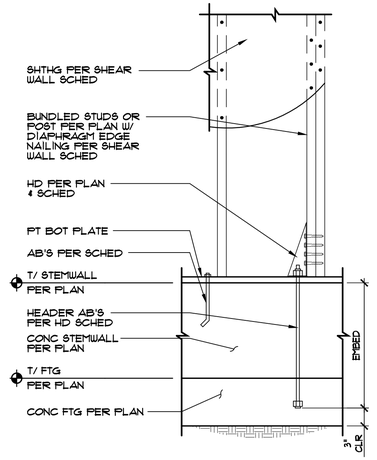

4 S3.1 TYP HOLD DOWN @ CONC STEM WALL

N.T.S.

SHEAR WALL SCHEDULE

SOME SHEAR WALL TYPES NOTED MAY NOT BE USED ON THIS PROJECT.

W6> FOR 0.131"øx2 1/2" NAILS IN DOUG-FIR LARCH (2009 IBC) [17]

WALL TYPE	WALL SHEATHING APA-RATED [1, 2, 12, 13]	NAIL SIZE & SPACING AT ALL PANEL EDGES [4, 5]	BLOCKING & STUD SIZE AT ADJOINING PANEL EDGES [3, 6, 14]	RIM JOIST OR BLOCKING CONN TO TOP PLATE BELOW [7, 8]	2x PLATE ATTACHMENT	SILL PLATE ATTACHMENT		SHEAR CAPACITY LBS/FT
					NAILING TO WOOD RIM JOIST OR BLOCKING BELOW	ANCHOR BOLT TO CONCRETE BELOW [10]	SILL PLATE AT FOUNDATION [11]	
W6>	15/32"	0.131"øx2 1/2" @ 6"OC	2x	CLIP @ 16"OC	0.148"øx3 1/4" @ 8"OC	5/8"ø @ 48"OC	2x	260
W2>	15/32"	0.131"øx2 1/2" @ 2"OC STAGGERED	3x	CLIP @ 8"OC	0.148"øx3 1/4" @ 6"OC (2) ROWS [9]	5/8"ø @ 32"OC	3x [16]	640

NOTES:

[1] INSTALL PANELS EITHER HORIZONTALLY OR VERTICALLY.

[2] WHERE SHEATHING IS APPLIED ON BOTH SIDES OF WALL, PANEL EDGE JOINTS ON 2x FRAMING SHALL BE STAGGERED SO THAT JOINTS ON THE OPPOSITE SIDES ARE NOT LOCATED ON THE SAME STUDS.

[3] BLOCKING IS REQUIRED AT ALL PANEL EDGES.

[4] PROVIDE SHEAR WALL SHEATHING AND NAILING FOR THE ENTIRE LENGTH OF THE WALLS INDICATED ON THE PLANS. ENDS OF FULL HEIGHT WALLS ARE DESIGNATED BY WINDOWS, OR DOORWAYS OR AS DESIGNATED ON PLANS. HOLD-DOWN REQUIREMENTS PER PLANS. (ALTERNATE NOTE: WALLS DESIGNATED AS PERFORATED SHEAR WALLS REQUIRE SHEATHING, SHEAR WALL NAILING, ETC. ABOVE AND BELOW ALL OPENINGS).

[5] SHEATHING EDGE NAILING IS REQUIRED AT ALL HOLD-DOWN POSTS. EDGE NAILING MAY ALSO BE REQUIRED TO EACH STUD USED IN BUILT-UP HOLD-DOWN POSTS. ADDITIONAL INFORMATION PER HOLD-DOWN DETAILS.

[6] INTERMEDIATE FRAMING TO BE 2x MINIMUM MEMBERS. ATTACH SHEATHING TO INTERMEDIATE FRAMING WITH 0.131"øx2 1/2" NAILS AT 12"OC WHERE STUDS ARE SPACED AT 16"OC AND 0.131"øx2 1/2" NAILS AT 6"OC WHERE STUDS ARE SPACED AT 24"OC.

[7] BASED ON 0.131"øx1 1/2" NAILS USED TO ATTACH FRAMING CLIPS DIRECTLY TO FRAMING. USE 0.131"øx2 1/2" NAILS WHERE INSTALLED OVER SHEATHING.

[8] FRAMING CLIPS: A35 OR LTP5 OR APPROVED EQUIVALENT.

[9] WHERE BOTTOM PLATE ATTACHMENT SPECIFIES (2) ROWS OF NAILS, PROVIDE DOUBLE JOIST, RIM JOIST OR EQUAL BELOW. STAGGER NAILS IN ROWS 1 1/2" APART MINIMUM.

[10] IN SEISMIC DESIGN CATEGORIES D, E AND F, ANCHOR BOLTS SHALL BE PROVIDED WITH HOT DIPPED GALVANIZED STEEL PLATE WASHERS 0.229" (MIN)x3"x3". THE HOLE IN THE PLATE WASHER MAY BE DIAGONALLY SLOTTED 13/16"x1 3/4" PROVIDED A STANDARD CUT WASHER IS PLACED BETWEEN THE PLATE WASHER AND NUT. EMBED ANCHOR BOLTS 7" MINIMUM INTO THE CONCRETE.

[11] PRESSURE TREATED MATERIAL CAN CAUSE EXCESSIVE CORROSION IN THE FASTENERS. PROVIDE HOT-DIPPED GALVANIZED (ELECTRO-PLATING IS NOT ACCEPTABLE) NAILS AND CONNECTOR PLATES (FRAMING ANGLES, ETC.) FOR ALL CONNECTORS IN CONTACT WITH PRESSURE TREATED FRAMING MEMBERS. ADDITIONAL INFORMATION PER STRUCTURAL NOTES.

[12] 7/16" APA-RATED SHEATHING (OSB) MAY BE USED IN PLACE OF 15/32" SHEATHING PROVIDED THAT ALL STUDS ARE SPACED AT 16"OC MAXIMUM.

[13] WHERE WOOD SHEATHING (W) IS APPLIED OVER GYPSUM SHEATHING (G), CONTACT THE ENGINEER OF RECORD FOR ALTERNATE NAILING REQUIREMENTS.

[14] AT ADJOINING PANEL EDGES, (2) 2x STUDS NAILED TOGETHER MAY BE USED IN PLACE OF SINGLE 3x STUD. DOUBLE 2x STUDS SHALL BE CONNECTED TOGETHER BY NAILING THE STUDS TOGETHER WITH 3" LONG NAILS OF THE SAME SPACING AND DIAMETER AS THE PLATE NAILING, PER SECTION.

[15] CONTACT THE STRUCTURAL ENGINEER OF RECORD FOR ADHESIVE OR EXPANSION BOLT ALTERNATIVES TO CAST-IN-PLACE ANCHOR BOLTS. SPECIAL INSPECTION MAY BE REQUIRED.

[16] NAIL STUDS TO 3x SILL PLATES WITH EITHER (2) 0.148"øx4" END NAILS OR (4) 0.131"øx2 1/2" TOENAILS.

[17] WX> WHERE "W" INDICATES WOOD SHEATHING AND "X" INDICATES EDGE NAIL SPACING.

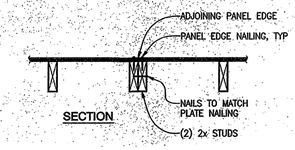

5 S3.1 SHEAR WALL SCHEDULE - DOUG FIR LARCH

N.T.S.

HOLD-DOWN/STRAP SCHEDULE - DOUG-FIR STUDS

[1, 2]→ INDICATES FOOTNOTES

	TYPE	NUMBER OF STUDS/POST [3]	NAILS, SCREWS OR BOLTS	ANCHOR					CAPACITY [9]	NOTES
				DIAMETER [13]	CONCRETE EMBEDMENT [4]					
					STEMWALL [5]		SPREAD FOOTING			
					CIP [6]	ADHESIVE [7]	CIP OR ADHESIVE [6, 8]			
CONCRETE TO WOOD [15]	HDU5	(2) 2x	(14) SDS1/4x2 1/2	5/8"ø	12"	[14]	8"		5.6k	----

NOTES:

[1] SOME HOLD-DOWN TYPES NOTED MAY NOT BE USED ON THIS PROJECT.

[2] TYPICAL HOLD-DOWN DETAILS PER 12/S3.2.

[3] PROVIDE PANEL EDGE NAILING PER SHEAR WALL SCHEDULE AT HOLD-DOWN STUDS/POST.

[4] BASED ON MINIMUM f'c = 2500 PSI CONCRETE.

[5] STEMWALLS SHALL BE 6" WIDE MINIMUM FOR 5/8"ø ANCHOR BOLTS AND 8" WIDE MINIMUM FOR 7/8"ø AND LARGER ANCHOR BOLTS.

[6] CAST-IN-PLACE (CIP) TYPE ANCHOR BOLTS AT HOLD-DOWNS SHALL HAVE A HEX HEAD WITH A STANDARD CUT WASHER OR A STANDARD HOOK (MINIMUM 3x BOLT DIAMETER).

[7] THREADED ROD WITH SIMPSON SET ADHESIVE.

[8] THREADED ROD WITH SIMPSON SET OR HILTI HY-150 ADHESIVE.

[9] INCLUDES 1.6 LOAD DURATION INCREASE FOR WOOD.

[10] FOR 5/8"ø ANCHOR BOLT, USE STANDARD CUT WASHER BETWEEN SEAT OF ANCHOR AND NUT.

[11] 0.148"øx3" NAILS MAY BE USED IN LIEU OF THE 0.148"øx3 1/4" NAILS SPECIFIED.

[12] TOTAL NAILS SPECIFIED, USE HALF THE NAILS AT THE STUDS ABOVE AND BELOW LEVEL BEING CONNECTED.

[13] AT PRESSURE TREATED SILLS, USE HOT DIPPED GALVANIZED BOLTS.

[14] CONTACT ENGINEER FOR POST INSTALLED HOLD-DOWN OPTIONS.

[15] NAIL LAMINATE MULTIPLE 2x STUDS WITH PLATE NAILING PER SHEAR WALL SCHEDULE.

5 S3.1 HOLD DOWN/ STRAP SCHEDULE - DOUG FIR LARCH

N.T.S.

NOTE:
This drawing, its contents and information is the property of Russell C. Page Architects. It is not to be copied or reproduced without written permission. The information, contents, and/or mation, details or devices may subject the user to penalties.

REGISTERED ARCHITECT
3728
RUSSELL C. PAGE
STATE OF WASHINGTON

REVISIONS:

NO	DATE	REVISION	BY

Russell C. Page
ARCHITECTS
204 N. Division Street, Suite 'E'
Spokane, WA 99202
(509) 467-3748 Fax: (509) 467-3817

PROJECT:
LIBERTY LAKE RV PARK
LIBERTY LAKE, WA
DRAWINGS:
FRAMING DETAILS

DATE: 6-28-2017

PLOT SCALE: AS NOTED

DRAWN BY: BAS

JOB NO.: 17-120

SHEET NO.: S3.1