1. ALL WORK SHALL BE IN ACCORDANCE WITH THE 2015 INTERNATIONAL BUILDING CODE (IBC), NATIONAL ELECTRIC CODE, UNIFORM PLUMBING CODE AND LOCAL JURISDICTION REQUIREMENTS.

2. DEFERRED SUBMITTALS: THE BELOW SYSTEMS WILL BE BIDDER DESIGNED. CONTRACTOR TO SUBMIT REQUIRED DESIGN AND DRAWINGS TO THE CITY.
   2.1. HVAC SYSTEMS
   2.2. ELECTRICAL SERVICE DESIGN
   2.3. FIRE ALARM PROTECTION SYSTEMS
   2.4. AUTOMATIC SPRINKLER PROTECTION
   2.5. BUILDING AND SITE EXTERIOR SIGNAGE SYSTEMS

3. CONTRACTOR IS RESPONSIBLE FOR VERIFICATION OF SITE CONDITIONS, INSTALLATION STANDARDS AND CONSTRUCTION CONDITIONS. FIELD VERIFY ALL NECESSARY DIMENSIONS. DISCREPANCIES BETWEEN SITE CONDITIONS AND THE CONSTRUCTION DRAWINGS SHALL BE CALLED TO THE ATTENTION OF THE ARCHITECT. WORK DONE WITHOUT THE ARCHITECTS APPROVAL IS THE RESPONSIBILITY OF THE CONTRACTOR.

4. DRAWINGS MAY BE REDUCED, VERIFY SCALE.

5. THE CONTRACTOR ALONE SHALL BE RESPONSIBLE FOR SAFETY. THE CONTRACTOR SHALL PROVIDE ADEQUATE SAFEGUARDS, SAFETY DEVICES AND PROTECTIVE EQUIPMENT, AND TAKE ANY OTHER NEEDED ACTIONS NECESSARY TO PROTECT THE LIFE, HEALTH AND SAFETY OF THE PUBLIC AND TO PROTECT PROPERTY IN CONNECTION WITH THE WORK COVERED BY THE CONTRACT.

6. PROVIDE A COMPLETE OPERATING AUTOMATIC FIRE SPRINKLER SYSTEM. SPRINKLER SYSTEM SHALL BE DESIGNED, INSTALLED AND TESTED IN ACCORDANCE WITH IFC SECTION 903 AND NFPA 13. PLANS SHALL BE DESIGNED BY A WASHINGTON STATE NICET CERTIFIED DESIGNER AND BEAR THE STAMP OF THE DESIGNER. TWO COMPLETE SETS OF DRAWINGS, SPECIFICATIONS, AND CALCULATIONS SHALL BE SUBMITTED TO THE ARCHITECT AND THE LOCAL AUTHORITY HAVING JURISDICTION.

7. PROVIDE A COMPLETE OPERATING FIRE ALARM SYSTEM, DESIGNED AND INSTALLED IN ACCORDANCE WITH IFC SECTION 907 AND NFPA 72. ALARM SYSTEM MONITORING SHALL BE PROVIDED THROUGH A UL CERTIFIED MONITORING AGENCY. FIRE ALARM CONTROL UNIT SHALL TRANSMIT AN ALARM TO A CONSTANTLY ATTENDED OFF-SITE UL CERTIFIED OR FM APPROVED MONITORING STATION AS DETERMINED BY THE OWNER. PLANS SHALL BE DESIGNED BY A QUALIFIED PERSON, AND SEALED BY A WASHINGTON STATE REGISTERED FIRE PROTECTION ENGINEER AND/OR ELECTRICAL ENGINEER. FIRE ALARM CONSTRUCTION DOCUMENT SUBMITTAL SHALL INCLUDE ALL ITEMS SPECIFIED IN IFC SECTION 907.1.1. TWO COMPLETE SETS OF DRAWINGS, SPECIFICATIONS, AND REVIEW COMMENTS SHALL BE SUBMITTED TO THE ARCHITECT AND LOCAL AUTHORITY HAVING JURISDICTION.

GENERAL PROJECT NOTES

KUNPENG LLC

RETAIL SHELL BUILDING
21801 E. COUNTRY VISTA DRIVE
LIBERTY LAKE, WASHINGTON 99019

T101 TITLE SHEET

CIVIL

C0.0 COVER SHEET
C1.0 EXISTING SITE SURVEY
C2.0 EROSION CONTROL PLAN
C2.1 SITE PLAN
C3.0 GRADING & STORM DRAIN PLAN
C4.0 UTILITY PLAN
C5.0 NOTES
C6.0 DETAILS

ARCHITECTURAL

A101 FLOOR PLAN
A102 ROOF PLAN
A201 EXTERIOR ELEVATIONS
A301 BUILDING SECTIONS
A501 SECTIONS & DETAILS
A502 SECTIONS & DETAILS
A503 SECTIONS & DETAILS
A504 SECTIONS & DETAILS
A601 DOOR & WINDOW TYPES & DETAILS

STRUCTURAL

S1.0 GENERAL NOTES
S1.1 GENERAL NOTES
S2.0 FOUNDATION PLAN
S2.1 ROOF FRAMING PLAN
S3.0 DETAILS
S3.1 DETAILS
S3.2 DETAILS

LANDSCAPE

L-1 LANDSCAPE PLAN
L-2 LANDSCAPE DETAILS

SITE LIGHTING

E1.1A SITE LIGHTING CALCULATIONS
E1.1B SITE - PARKING LOT CALCULATIONS

INDEX TO DRAWINGS

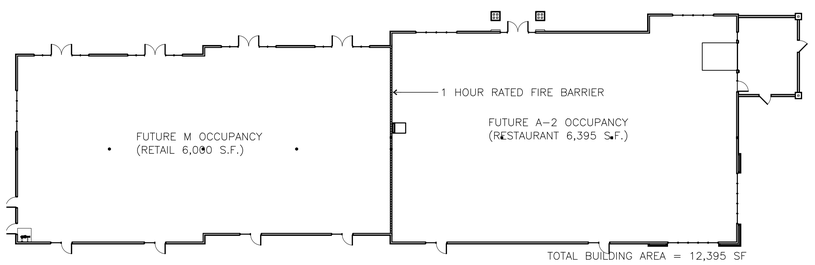

OCCUPANCY PLAN

PROJECT NAME: RETAIL SHELL BUILDING

PROJECT ADDRESS: 21801 E COUNTRY VISTA DR
LIBERTY LAKE, WA, 99019

PARCEL ID: 55161.9167

PROJECT DESCRIPTION: SINGLE STORY WOOD FRAMED CONSTRUCTION OF A RETAIL SHELL BUILDING, INCLUDING GRADING, DRAINAGE, UTILITIES, LANDSCAPING, AND PARKING FOR 61 VEHICLES.

INTERIOR IMPROVEMENTS WILL BE BY SEPARATE PERMIT SUBMITTAL.

OWNER: KUNPENG LLC
CONTACT: PETER CHEN (509) 943-3500
ADDRESS: 832 SUMMERHILL RIDGE DR NW
ISSAQUAH WA 98027

ARCHITECT: RGU ARCHITECTURE & PLANNING
CONTACT: RICK GIBERSON (509) 591-0980
ADDRESS: 1600 N. 20TH AVE. SUITE E
PASCO, WA 99301

CIVIL/STRUCTURAL: 4TY ENGINEERING
CONTACT: DANNY PATTERSON PE (509) 209-7455
ADDRESS: 1923 W FAIRVIEW AVE
SPOKANE WA 99205

LANDSCAPE: MTLA
CONTACT: MIKE TERRELL LA (509) 922-7449
ADDRESS: 1421 N MEADOWWOOD LN #150
LIBERTY LAKE WA 99019

SITE LIGHTING: DEI ELECTRICAL CONSULTANTS
CONTACT: ERNIE NYE (509) 747-5139
ADDRESS: 2205 N WOODRUFF RD
SPOKANE VALLEY WA 99206

PROJECT INFORMATION

2015 WASHINGTON STATE ENERGY CODE WAC 51-11C

CLIMATE ZONE: 5B

INSULATION VALUES:
ROOF: R-38 (ENTIRELY ABOVE DECK)
WALLS: R-21
SLAB ON GRADE WALL: R-10 PERIMETER TO -24"
INSULATION IDENTIFICATION MARK SHALL BE APPLIED TO ALL INSULATION & MUST BE OBSERVABLE DURING INSPECTION

OPENINGS:
OPAQUE DOORS: U-0.37
WINDOWS: U-0.65

SOLAR HEAT GAIN COEFFICIENT:
VERTICAL: SHGC-0.40
INSULATED GLAZING: LOW-e, WITH THERMAL BREAK

VAPOR RETARDER: PROVIDE ON WARM SIDE OF INSULATION AT WALLS UP TO ROOF DECK, SEAL SEAMS.

AIR BARRIER: PROVIDE AIR BARRIER AT BUILDING ENVELOPE EXTERIOR ON ALL WALL AND ROOF SURFACE AREAS. CONTRACTOR TO DETERMINE AIR BARRIER TEST METHOD. SUBMIT AIR BARRIER TEST TO CITY WHEN COMPLETED. IF RESULTS EXCEED 0.4 CFM/FT2 @ .3 WG, THEN INSPECT & RE-SEAL LEAK SOURCES. SUBMIT FOLLOW UP REPORT. OWNER TO RECEIVE COPY OF FINAL REPORT SHOWING COMPLIANCE.

BUILDING ENVELOPE SEALING: SEAL, CAULK, GASKET AND/OR WEATHERSTRIP ALL EXTERIOR ENVELOPE PENETRATIONS.

NREC NOTES

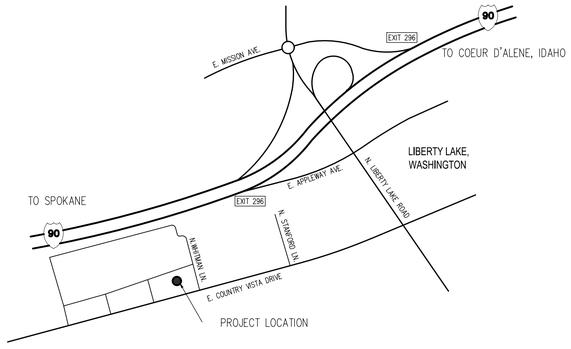

VICINITY MAP

2015 IBC, CITY OF LIBERTY LAKE MUNINCIPAL CODE

ZONING		M-2
SETBACKS:	FRONT	MAX 25
	SIDES	0
	REAR	0
PARKING REQUIRED:		59
PARKING PROPOSED:		(INCLUDING 3 ADA) 61
PROPOSED BUILDING HEIGHT:		28'-0"
CONSTRUCTION TYPE:		VB
OCCUPANCY TYPE:		FUTURE A2 / M
PROPOSED OCCUPANT LOAD:		UNOCCUPIED
FIRE PROTECTION:		FULLY SPRINKLERED
PROPOSED STORIES:		1

GA FILE NO. WP 3605	GENERIC	1 HOUR FIRE	30 to 34 STC SOUND

GYPSUM WALLBOARD, WOOD STUDS

One layer 5/8" type X plain or predecorated gypsum wallboard, water-resistant gypsum backing board, or gypsum veneer base applied parallel or at right angles to each side of 2 x 4 wood studs 16" o.c. with 6d coated nails, 1 7/8" long, 0.0915" shank, 1/4" heads, 7" o.c. Joints of square edge, bevel edge or predecorated wallboard may be left exposed.

Joints staggered 16" on opposite sides. **(LOAD-BEARING)**

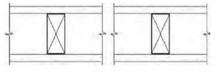

Thickness: 4 7/8"
Approx. Weight: 7 psf
Fire Test: UL R1319-4, 6, 6-17-52; UL R2717-39, 1-20-66; UL R3501-52, 3-15-66, UL Design U305; ULC Design W301
Sound Test: OR 64-8, 2-4-64

CODE NOTES

Drawn RGF
Checked RGU
Reviewed RGU
CAD File No. 160071.0-0450-T-11-16

No.	REVISIONS/SUBMISSIONS	Date
0		

Seal

THE CONTRACTOR SHALL CHECK AND VERIFY ALL ASPECTS OF THE WORK AND REPORT ANY ERRORS OR OMISSIONS TO THE ARCHITECT PRIOR TO COMMENCING WORK. ALL CONSTRUCTION SHALL CONFORM TO CODES AND ORDINANCES, LOCAL AND NATIONAL, IN EFFECT AT THE TIME OF CONSTRUCTION. DRAWINGS ARE DIAGRAMMATIC IN NATURE, AND DO NOT PURPORT TO REPRESENT ALL ITEMS REQUIRED FOR COMPLETION OF THE WORK. DRAWINGS SHALL NOT BE SCALED.

Robert Gary Uhrich, AIA
architecture and planning
41 Morgan Road
P.O. Box 820
Applewood, WA 98092
P 509 758 8894

RGU architecture

CIVIL/STRUCTURAL ENGINEERING:
4TY ENGINEERING - SPOKANE WA
LANDSCAPE ARCHITECT
MTLA - LIBERTY LAKE WA
ELECTRICAL ENGINEERING
DEI ENGINEERING SPOKANE, WASHINGTON

KUNPENG LLC
RETAIL SHELL BUILDING
21801 E COUNTRY VISTA DR
LIBERTY LAKE WA

Drawing Title: TITLE SHEET

Submittal: CONSTRUCTION
Date: 09/21/2016
Scale: AS SHOWN
Project No.

Drawing No.

T101

ABBREVIATIONS

AB	ANCHOR BOLT
AC	ASPHALT CONCRETE
ACP	ACOUSTIC PANEL
ACON	ASBESTOS CEMENT
ADJ	ADJUSTABLE
AFF	ABOVE FINISHED FLOOR
AISC	AMERICAN INSTITUTE OF STEEL CONSTRUCTION
ALTR	ALTERNATE
ALUM	ALUMINUM
ANSI	AMERICAN NATIONAL STANDARDS INSTITUTE
AP	ACCESS PANEL
ASCE	AMERICAN SOCIETY OF CIVIL ENGINEERS
ASPH	ASPHALT
ASTM	AMERICAN SOCIETY OF TESTING AND MATERIALS
ASSY	ASSEMBLY
AVE	AVENUE
AWS	AMERICAN WELDING SOCIETY
BFP	BELT FILTER PRESS
BI	BLACK IRON
BLD FLG	BLIND FLANGE
BLDG	BUILDING
BLK	BLOCK
BOD	BOTTOM OF DUCT, BIOCHEMICAL OXYGEN DEMAND
BOW	BOTTOM OF WALL
BTWN	BETWEEN
BVC	BEGIN VERTICAL CURVE
C	CONDUIT
CAP	CORRUGATED ALUMINUM PIPE
CB	CATCH BASIN
CCP	CONCRETE CYLINDER PIPE
CD	CEILING DIFFUSER
CFM	CUBIC FEET PER MINUTE
CI	CAST IRON
CL	CLASS
CLAR	CLARIFIER
℄	CENTER LINE
CLR	CLEARANCE
CMP	CORRUGATED METAL PIPE
CMU	CONCRETE MASONRY UNIT
CO	CLEANOUT
CONC	CONCRETE
CONN	CONNECTION
CONT	CONTRACTOR
CONV	CONVEYOR
CPLG	COUPLING
CONTIN	CONTINUED
COP	COPPER
CP	CORNER POST
CSH	CONCRETE SURFACE HARDENER
CTR	CENTER
CX	CONNECT TO EXISTING
D	DRAIN
DI	DUCTILE IRON
DIA	DIRECTION
DIR	DIAMETER
DISCH	DISCHARGE
DN	DOWN
DO	DISSOLVED OXYGEN
DP	DIFFERENTIAL PRESSURE
E	EAST
EA	EACH
ECC	ECCENTRIC
EFF	EFFLUENT
EG	EXHAUST GRILLE
EL	ELEVATION
EL	ELBOW
ELEC	ELECTRICAL
EMERG	EMERGENCY
EXIST	EXISTING
EXP	EXPANSION
EW	EACH WAY
EVC	END VERTICAL CURVE
FAB	FABRICATED
FCA	FLANGED COUPLING ADAPTER
FCO	FLOOR CLEANOUT
FD	FLOOR DRAIN
FF	FACTORY FINISH, FINISHED FLOOR
FIG	FIGURE
FIN	FINISHED
FL	FLANGE
FL	FLOW LINE
FLEX	FLEXIBLE
FLR	FLOOR
FPM	FEET PER MINUTE
FT	FEET
FT^2	SQUARE FEET
GA	GAUGE
GALV	GALVANIZED
GEN	GENERAL
GI	GALVANIZED IRON
GOVT	GOVERNMENT
GPD	GALLONS PER DAY
GPM	GALLONS PER MINUTE
GRD	GRADE
GRV	GROOVED PIPE OR COUPLING
GSM	GALVANIZED SHEET METAL
GV	GATE VALVE
GWB	GYPSUM WALL BOARD
H	HEIGHT
HEX	HEXAGONAL
HDPE	HIGH DENSITY POLYETHYLENE
HORIZ	HORIZONTAL
HP	HORSEPOWER
HR	HOUR
HTP	HEAT TRACED PIPE
ID	INSIDE DIAMETER
IE	INVERT ELEVATION
INF	INFLUENT
INV	INVERT
J BOX	JUNCTION BOX
L	LENGTH
LB	POUND
LB/HR	POUNDS PER HOUR
LF	LINEAR FEET
MAG	MAGNETIC
MAX	MAXIMUM
MDO	MEDIUM DENSITY OVERLAY
MECH	MECHANICAL
MFGR, MFR	MANUFACTURER
MGD	MILLION GALLONS PER DAY
MG/L	MILLIGRAM PER LITER
MH	MANHOLE
MIN	MINIMUM
MJ	MECHANICAL JOINT
MO	MID ORDINATE
N	NORTH
No.	NUMBER
NIC	NOT IN CONTRACT
NTS	NOT TO SCALE
OBD	OPPOSED BLADE DAMPER
OC	ON CENTER
OD	OUTSIDE DIAMETER
OF	OUTSIDE FACE
OFCI	OWNER FURNISHED CONTRACTOR INSTALLED
OPNG	OPENING
OPP	OPPOSITE
OSHA	OCCUPATIONAL SAFETY AND HEALTH ADMINISTRATION
PE	PLAIN END
PERF	PERFORATED
PL	PLATE
PLYWD	PLYWOOD
POT	POTABLE
PRV	PRESSURE REDUCING VALVE
PS	PIPE SUPPORT
PSF	POUNDS PER SQUARE FOOT
PSI	POUNDS PER SQUARE INCH
PSIG	POUNDS PER SQUARE INCH GAUGE
PTS	PAINTED SURFACE
PVC	POLYVINYL CHLORIDE
PVI	POINT OF VERTICAL INTERSECTION
PVMT	PAVEMENT
QT	QUARTER
QUAD	QUADRANT
RAG	RETURN AIR GRILLE
RAS	RETURN ACTIVATED SLUDGE
RD	ROOF DRAIN
RED	REDUCER
REINF	REINFORCE
REQD	REQUIRED
RESTL	REINFORCING STEEL
RLX	RELOCATE EXISTING
RM	ROOM
RO	ROUGH OPENING
RS	RAW SEWAGE
R/W	RIGHT-OF-WAY
RX	REMOVE EXISTING
S	SOUTH
SBR	SEQUENCING BATCH REACTOR
SC	SCUM
SCH	SCHEDULE
SF	SQUARE FEET
SHT	SHEET
SL	SLOPE
SL	SLUDGE
SOC	SOCKET
SP	STATIC PRESSURE
SPECS	SPECIFICATIONS
SQ	SQUARE
SS	STAINLESS STEEL
STA	STATION
STD	STANDARD
STL	STEEL
STRG	STRONG
SUC	SUSPENDED CEILING
TAPD	TAPERED
TB	TOP AND BOTTOM
TC	TOP OF CURB
TDH	TOTAL DYNAMIC HEAD
TEL	TELEPHONE
THK	THICK
THRD	THREADED
THRU	THROUGH
TK	TANK
TOC	TOP OF CONCRETE
TOG	TOP OF GROUT
TOW	TOP OF WALL
TS	TOTAL SOLIDS
TYP	TYPICAL
VC	VERTICAL CURVE
VERT	VERTICAL
VFD	VARIABLE FREQUENCY DRIVE
VIS	VINYL SHEET
VS	VOLATILE SOLIDS
VTR	VENT THROUGH ROOF
W	WIDTH, WEST
W/	WITH
WAS	WASTE ACTIVATED SLUDGE
WCO	WALL CLEANOUT
WD	WIDE
W/O	WITHOUT
WS	WATER SURFACE
WWM	WELDED WIRE MESH
WWF	WELDED WIRE FABRIC

SYMBOL LEGEND

EXISTING	NEW
ASPHALT PAVEMENT	ASPHALT PAVEMENT
GRAVEL SURFACING	GRAVEL SURFACING
CONCRETE SURFACING	CONCRETE SURFACING
GRASS	GRASS
E — ELECTRICAL LINE	E — ELECTRICAL LINE
T — TELEPHONE LINE	T — TELEPHONE LINE
FENCE	FENCE
GATE VALVE	GATE VALVE
BUTTERFLY VALVE	BUTTERFLY VALVE
CHECK VALVE	CHECK VALVE
PLUG VALVE	PLUG VALVE
UTILITY POLE WITH GUY WIRE	UTILITY POLE WITH GUY WIRE
UTILITY POLE	UTILITY POLE
LUMINARY	LUMINARY (SEE ALSO ELECTRICAL)
JUNCTION BOX (AS NOTED)	JUNCTION BOX (AS NOTED)
SSMH MANHOLE	MANHOLE
FIRE HYDRANT	FIRE HYDRANT
TYPE 1 CATCH BASIN OR CURB INLET	TYPE 1 CATCH BASIN OR CURB INLET
TYPE 2 CATCH BASIN	TYPE 2 CATCH BASIN
PROPERTY LINE	
RIGHT-OF-WAY LINE	
SECTION CORNER	
1/4 CORNER	
WATER METER	WATER METER
MONUMENT	MONUMENT
TREES	TREES (SEE ALSO LANDSCAPE PLAN)
SHRUBS	SHRUBS
BORING AND TEST PIT LOCATIONS	BORING AND TEST PIT LOCATIONS
BUILDINGS	BUILDINGS
(20) CONTOUR	20 CONTOUR
YH YARD HYDRANT	YH YARD HYDRANT
C.O. CLEANOUT	C.O. CLEANOUT
ELECTRICAL PULL BOX	ELECTRICAL PULL BOX
X.XX FINISH GRADE ELEVATION	X.XX FINISH GRADE ELEVATION

Project Location
21801 E. Country Vista Dr.
Liberty Lake, WA

VICINITY MAP

N

POWER/GAS

AVISTA UTILITIES
1411 E. MISSION AVE.
SPOKANE, WA 99220
PHONE: (509) 495-8536
FAX: (509) 495-8734
CONTACT: SHERRY MILLER

WATER & SEWER

LIBERTY LAKE SEWER
AND WATER DISTRICT #1
22510 E. MISSION AVE.
LIBERTY LAKE, WA 99019
PHONE: (509) 922-5443

FIRE DEPARTMENT

SPOKANE VALLEY
FIRE DEPARTMENT
2120 N. WILBUR RD.
SPOKANE VALLEY, WA 99206

CIVIL ENGINEER

FOR TY CIVIL ENGINEERING
1923 W. FAIRVIEW
SPOKANE, WA 99205
PHONE: (509) 209-7455
CONTACT: DANNY PATTERSON

IMPERVIOUS AREA CALCULATIONS

TOTAL SITE AREA:	56,050 SQ. FT.
TOTAL EXISTING IMPERVIOUS AREA:	1,959 SQ. FT.
TOTAL PROPOSED LANDSCAPED AREA:	20,753 SQ. FT.
TOTAL PROPOSED PAVED AREA:	22,815 SQ. FT.
TOTAL PROPOSED ROOF AREA (NON POLLUTION):	12,482 SQ. FT.
TOTAL PROPOSED IMPERVIOUS AREA:	35,297 SQ. FT.

SHEET INDEX

COVER SHEET — C0.0
EXISTING SITE SURVEY — C1.0
EROSION CONTROL PLAN — C2.0
SITE PLAN — C2.1
GRADING & STORM DRAINAGE PLAN — C3.0
UTILITY PLAN — C4.0
NOTES — C5.0
DETAILS — C6.0

CONTRACTOR NOTE:

ALL EXISTING UTILITIES SHOWN ON PLANS ARE TO BE VERIFIED HORIZONTALLY AND VERTICALLY PRIOR TO ANY CONSTRUCTION. ALL EXISTING FEATURES INCLUDING BURIED UTILITIES ARE SHOWN AS INDICATED ON RECORD MAPS AND SURVEYS FURNISHED BY OTHERS. WE ASSUME NO LIABILITY FOR THE ACCURACY OF THOSE RECORDS AND SURVEYS. CONTACT THE UTILITY OWNER/AGENCY FOR THE FINAL LOCATION OF EXISTING UTILITIES IN AREAS CRITICAL TO CONSTRUCTION.

UNDERGROUND SERVICE ALERT
ONE-CALL NUMBER
(800)424-5555
CALL TWO BUSINESS DAYS BEFORE YOU DIG

4TY
Danny Paterson, P.E.
1923 W Fairview
Spokane, WA 99205
C: 509.209.7455
Email: 4TyCivil@gmail.com
Civil Engineering

DANNY LEE PATTERSON
STATE OF WASHINGTON
44446
REGISTERED
PROFESSIONAL ENGINEER

REVISIONS

#	DESCRIPTION	DATE

1

PERMIT DRAWINGS
LIBERTY LAKE RETAIL

21801 E. COUNTRY VISTA DR.
LIBERTY LAKE, WA

COVER SHEET

C0.0

4 TY NO.	1602	DRAWN	DLP
DATE	9-8-16	REVIEWED	DLP

TOPOGRAPHIC SURVEY
FOR
PETER CHEN, KUNPENG, LLC
A PORTION OF SECTION 16, TOWNSHIP 25 NORTH, RANGE 45 EAST, W.M.
LIBERTY LAKE, SPOKANE COUNTY, WASHINGTON

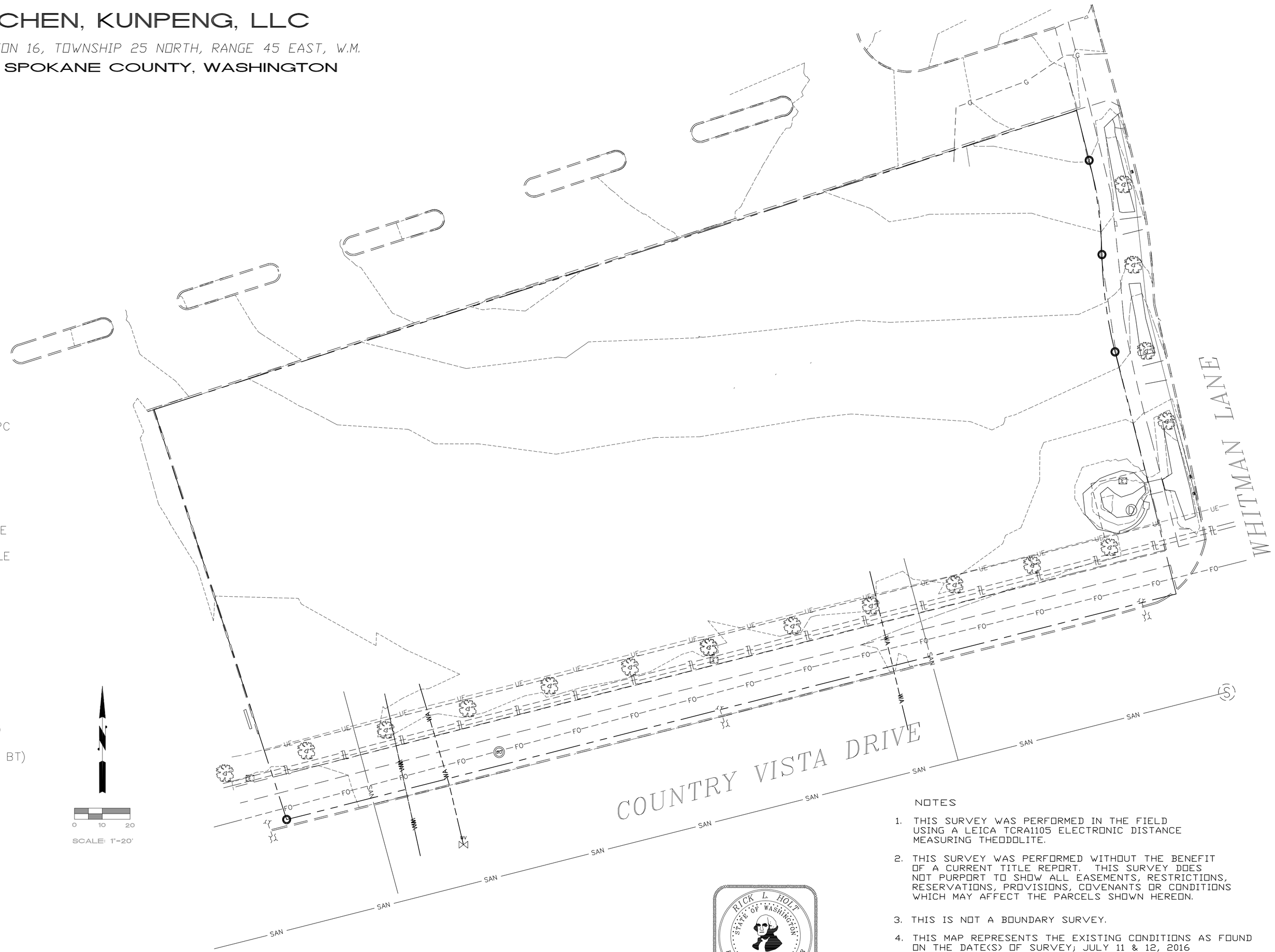

LEGEND

EXISTING FEATURES

- CURB
- FOUND 5/8" REBAR W/YPC
- DRYWELL
- LIGHT POLE
- WATER VALVE
- SANITARY SEWER MANHOLE
- WATER BLOW OFF MANHOLE
- IRRIGATION BOX
- ELECTRICAL BOX
- TREE (DECIDUOUS OR CONIFEROUS)
- WATER LINE
- SANITARY SEWER LINE
- POWER LINE (OHP OR BP)
- TELEPHONE LINE (OHT OR BT)
- GAS LINE
- CONTOURS
- FIBER OPTIC LINE

NOTES

1. THIS SURVEY WAS PERFORMED IN THE FIELD USING A LEICA TCRA1105 ELECTRONIC DISTANCE MEASURING THEODOLITE.
2. THIS SURVEY WAS PERFORMED WITHOUT THE BENEFIT OF A CURRENT TITLE REPORT. THIS SURVEY DOES NOT PURPORT TO SHOW ALL EASEMENTS, RESTRICTIONS, RESERVATIONS, PROVISIONS, COVENANTS OR CONDITIONS WHICH MAY AFFECT THE PARCELS SHOWN HEREON.
3. THIS IS NOT A BOUNDARY SURVEY.
4. THIS MAP REPRESENTS THE EXISTING CONDITIONS AS FOUND ON THE DATE(S) OF SURVEY; JULY 11 & 12, 2016
5. UNDERGROUND UTILITY LOCATIONS SHOWN HEREON ARE BASED UPON SURFACE INDICATORS AND THE 1-800 LOCATE SERVICE. PRIOR TO CONSTRUCTION USER SHOULD CALL THE UTILITY LOCATE SERVICE 48 HOURSBEFORE CONSTRUCTION.
6. CONTOURS AND SURFACE FEATURES AS REPRESENTED HEREON ARE IN CONFORMANCE WITH ACCEPTED INDUSTRY PRACTICE. CONTOUR INTERVAL: 1 FEET.

RICK L. HOLT
STATE OF WASHINGTON
37549
REGISTERED
PROFESSIONAL LAND SURVEYOR

LEGAL DESCRIPTION:

PARCEL A-22, EIGHTH AMENDMENT TO BINDING SITE PLAT BY SURVEY LIBERTY LAKE CORPORATION PART (BSP 50-96), ACCORDING TO THE PLAT THEREOF RECORDED IN VOLUME 1 OF PLATS, PAGE 91H, UNDER AUDITOR'S FILE NO. 5234572, RECORDS OF SPOKANE COUNTY, WASHINGTON.

SITUATE IN THE CITY OF LIBERTY LAKE, COUNTY OF SPOKANE, STATE OF WASHINGTON.

HOLT SURVEYING AND MAPPING, INC.
PROFESSIONAL LAND SURVEY SERVICES
PO BOX 271, CHENEY, WA 99004
Tel: 509-222-0468
rickholtsurveying@gmail.com

PROJECT	SCALE: 1"=20'	SHEET DESCRIPTION	JOB NO.
TOPOGRAPHIC SURVEY FOR PETER CHEN, KUNPENG, LLC — A PORTION OF SECTION 16, TOWNSHIP 25 NORTH, RANGE 45 EAST, W.M. — LIBERTY LAKE, SPOKANE COUNTY, WASHINGTON	DRAWN BY: R. HOLT CHECKED BY: R. HOLT FIELD BOOK: XX DATE: JULY 13, 2016	EXISTING CONDITIONS 21801 EAST COUNTRY VISTA DRIVE, LIBERTY LAKE, WA JULY, 2016	16-021 DRAWING NO. 16-021 CALC.DWG SHEET 1 OF 1

4 TY
Danny Paterson, P.E.
1923 W Fairview
Spokane, WA 99205
C: 509.209.7455
Email: 4TyCivil@gmail.com
Civil Engineering

REVISIONS

#	DESCRIPTION	DATE

PROJECT #: XXXXXX

PERMIT DRAWINGS
LIBERTY LAKE RETAIL

21801 E. COUNTRY VISTA DR.
LIBERTY LAKE, WA

EXISTING SITE SURVEY

C1.0

4 TY NO.	1602	DRAWN	DLP
DATE	9-8-16	REVIEWED	DLP

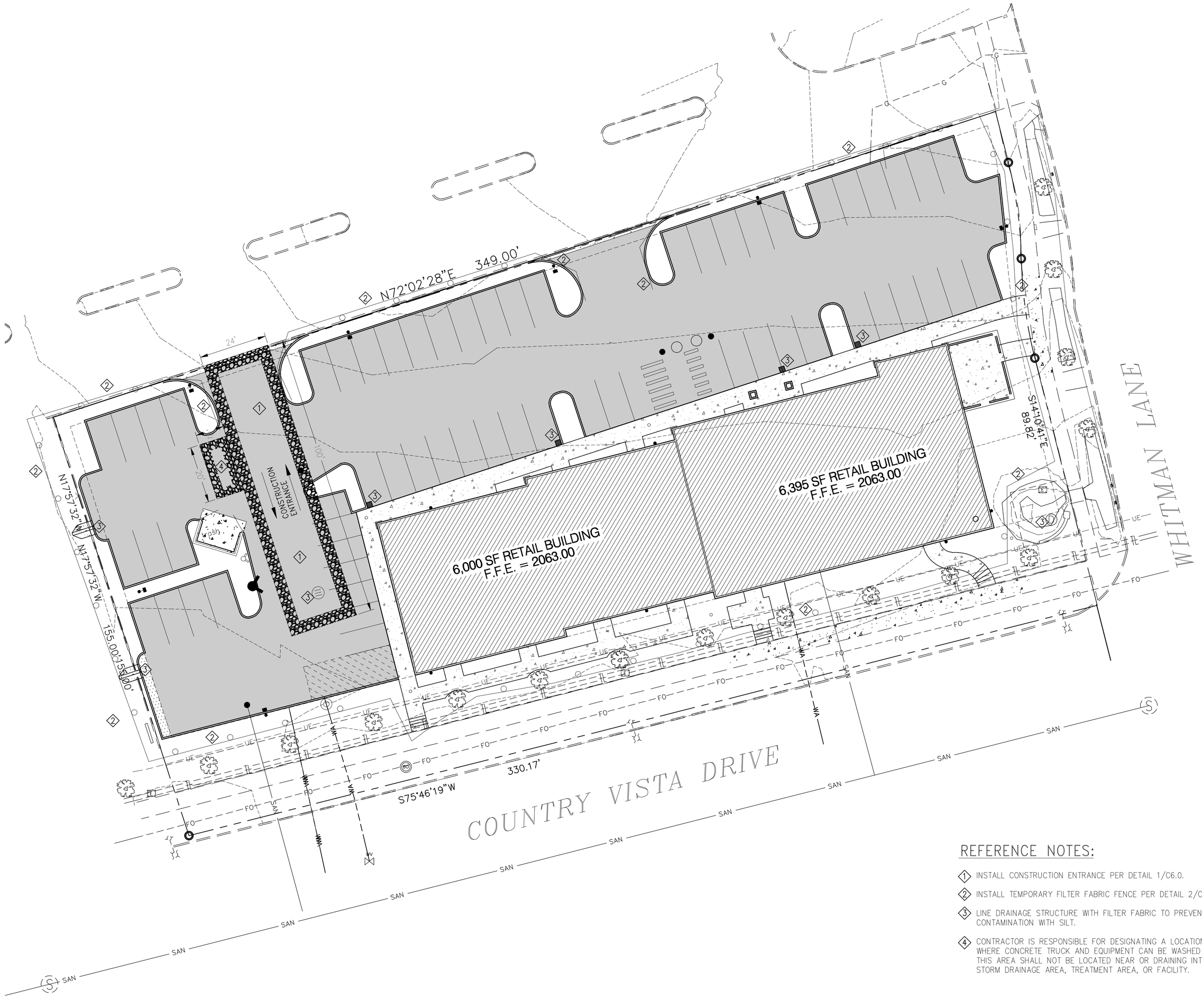

REFERENCE NOTES:

1. INSTALL CONSTRUCTION ENTRANCE PER DETAIL 1/C6.0.
2. INSTALL TEMPORARY FILTER FABRIC FENCE PER DETAIL 2/C6.0.
3. LINE DRAINAGE STRUCTURE WITH FILTER FABRIC TO PREVENT CONTAMINATION WITH SILT.
4. CONTRACTOR IS RESPONSIBLE FOR DESIGNATING A LOCATION WHERE CONCRETE TRUCK AND EQUIPMENT CAN BE WASHED OUT. THIS AREA SHALL NOT BE LOCATED NEAR OR DRAINING INTO A STORM DRAINAGE AREA, TREATMENT AREA, OR FACILITY.

CONTRACTOR NOTE:

ALL EXISTING UTILITIES SHOWN ON PLANS ARE TO BE VERIFIED HORIZONTALLY AND VERTICALLY PRIOR TO ANY CONSTRUCTION. ALL EXISTING FEATURES INCLUDING BURIED UTILITIES ARE SHOWN AS INDICATED ON RECORD MAPS AND SURVEYS FURNISHED BY OTHERS. WE ASSUME NO LIABILITY FOR THE ACCURACY OF THOSE RECORDS AND SURVEYS. CONTACT THE UTILITY OWNER/AGENCY FOR THE FINAL LOCATION OF EXISTING UTILITIES IN AREAS CRITICAL TO CONSTRUCTION.

GRAPHIC SCALE

20 0 10 20

(IN FEET)
1 inch = 20 ft.

UNDERGROUND SERVICE ALERT
ONE-CALL NUMBER
(800)424-5555
CALL TWO BUSINESS DAYS BEFORE YOU DIG

4 TY
Civil Engineering

Danny Paterson, P.E.
1923 W Fairview
Spokane, WA 99205
C: 509.209.7455
Email: 4TyCivil@gmail.com

DANNY LEE PATTERSON
STATE OF WASHINGTON
44446
REGISTERED
PROFESSIONAL ENGINEER

REVISIONS

#	DESCRIPTION	DATE

PERMIT DRAWINGS
LIBERTY LAKE RETAIL

21801 E. COUNTRY VISTA DR.
LIBERTY LAKE, WA

EROSION CONTROL PLAN

C2.0

4 TY NO.	1602	DRAWN	DLP
DATE	9-8-16	REVIEWED	DLP

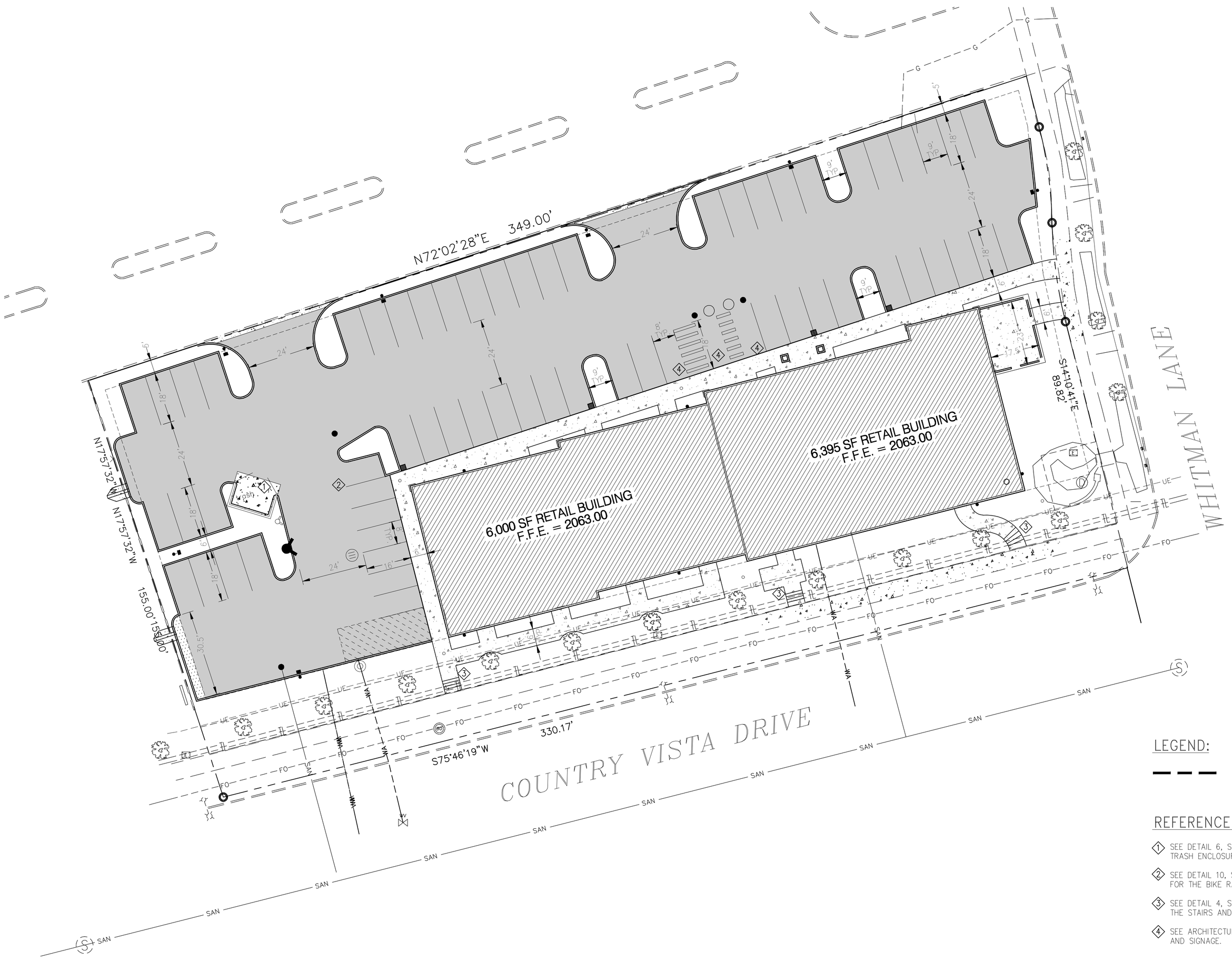

SITE PLAN INFORMATION:

Name of project: Liberty Lake Retail Building Date: 9/16/16
Street address: 21801 E Country Vista Dr., Liberty Lake, WA
Legal Description: Parcel # 55161.9167
Owner: Peter Chen, 832 Summerhill Ridge Dr. NW, Issaquah, WA 98027
Engineer/Architect: Danny Patterson, P.E. / Rick Giberson, AIA
Contractor: Baker Construction
Contact person: Reed Caudle
New _X_ Remodel __ Addition __
Existing lot/building use: Empty
Proposed use: Retail Building

Lot area (square feet): 56,050 Sq.Ft.
Percentage of lot covered by building(s): ~22%
Area of lot covered by Hard surfacing of any kind: ~73%

Project Description: Retail Building with parking and associated landscaping is proposed to be built on a fairly evenly sloped empty lot in Liberty Lake. The soils for this lot are described in the Geotechnical Report prepared for it. There is native grasses and weeds but for the most part the site is bare. There are no water bodies onsite but the site is located over the aquifer.

LEGEND:

LIMITS OF WORK

REFERENCE NOTES:

1. SEE DETAIL 6, SHEET A504 OF THE ARCHITECTURAL PLANS FOR TRASH ENCLOSURE.
2. SEE DETAIL 10, SHEET A504 OF THE ARCHITECTURAL PLANS FOR THE BIKE RACK.
3. SEE DETAIL 4, SHEET A504 OF THE ARCHITECTURAL PLANS FOR THE STAIRS AND RAILING.
4. SEE ARCHITECTURAL PLANS FOR TYPICAL ADA PARKING DETAILS AND SIGNAGE.

GRAPHIC SCALE

20 0 10 20

(IN FEET)
1 inch = 20 ft.

CONTRACTOR NOTE:

ALL EXISTING UTILITIES SHOWN ON PLANS ARE TO BE VERIFIED HORIZONTALLY AND VERTICALLY PRIOR TO ANY CONSTRUCTION. ALL EXISTING FEATURES INCLUDING BURIED UTILITIES ARE SHOWN AS INDICATED ON RECORD MAPS AND SURVEYS FURNISHED BY OTHERS. WE ASSUME NO LIABILITY FOR THE ACCURACY OF THOSE RECORDS AND SURVEYS. CONTACT THE UTILITY OWNER/AGENCY FOR THE FINAL LOCATION OF EXISTING UTILITIES IN AREAS CRITICAL TO CONSTRUCTION.

UNDERGROUND SERVICE ALERT
ONE-CALL NUMBER
(800)424-5555
CALL TWO BUSINESS DAYS BEFORE YOU DIG

4 Ty Civil Engineering
Danny Paterson, P.E.
1923 W Fairview
Spokane, WA 99205
C: 509.209.7455
Email: 4TyCivil@gmail.com

DANNY LEE PATTERSON
STATE OF WASHINGTON
44446
REGISTERED PROFESSIONAL ENGINEER

REVISIONS

#	DESCRIPTION	DATE

PERMIT DRAWINGS
LIBERTY LAKE RETAIL

21801 E. COUNTRY VISTA DR.
LIBERTY LAKE, WA

SITE PLAN

C2.1

4 TY NO.	1602	DRAWN	DLP
DATE	9-8-16	REVIEWED	DLP

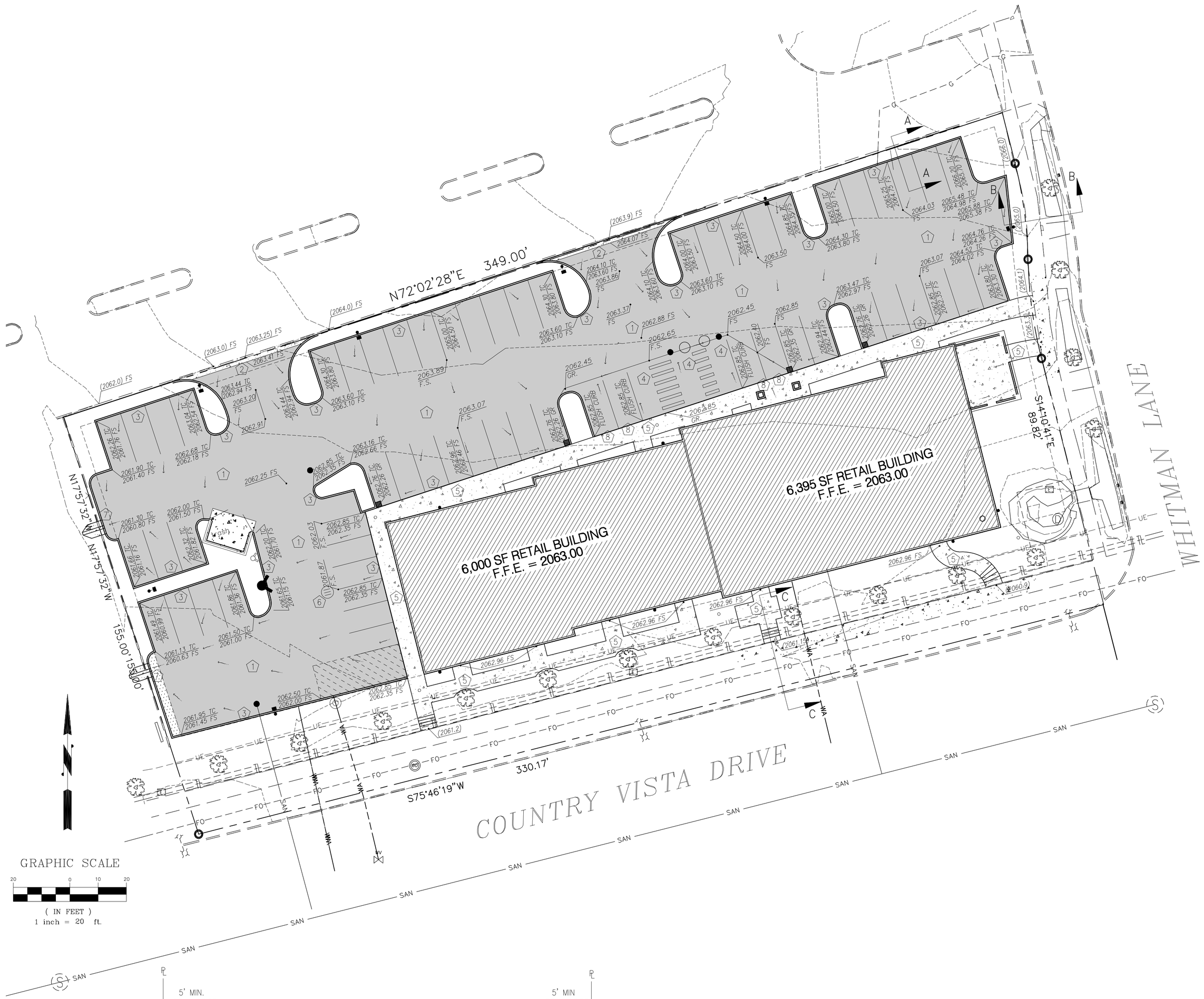

REFERENCE NOTES:

1. CONTRACTOR TO INSTALL NEW ASPHALT PAVEMENT, SEE DETAIL 4/C6.0.
2. CONTRACTOR TO INSTALL NEW 24' DRIVEWAY PER SPOKANE COUNTY STD. PLAN NO. B-18A AND TYPE 1 CROSS GUTTER.
3. CONTRACTOR TO INSTALL NEW 6" VERTICAL CONCRETE CURB, SEE DETAIL 5/C6.0.
4. ADA SIGNING AND STRIPING, SEE ARCHITECTURAL PLANS.
5. CONTRACTOR TO INSTALL NEW ONSITE 6' WIDE CONCRETE SIDEWALK, SEE DETAIL 3/C6.0.
6. CONTRACTOR TO INSTALL TYPE A DRYWELL PER COUNTY STD. PLAN B-1.
7. CONTRACTOR TO INSTALL 30' WIDE CURB CUT WITH 18" TRANSITION ON EACH SIDE PER COUNTY STD. PLAN B-8. CONTRACTOR TO EXTEND APRON TO BOTTOM OF EXISTING SWALE.
8. CONTRACTOR TO INSTALL TYPICAL CONCRETE WHEEL STOP PER DETAIL 7/C6.0.

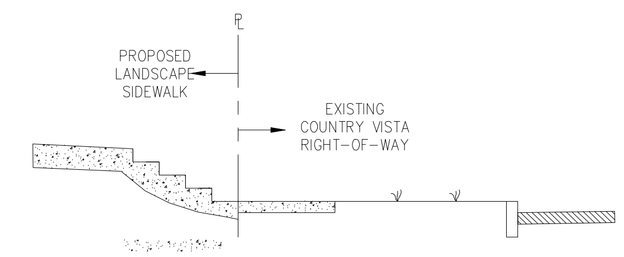

SITE X-SECTION C-C

SCALE : NTS

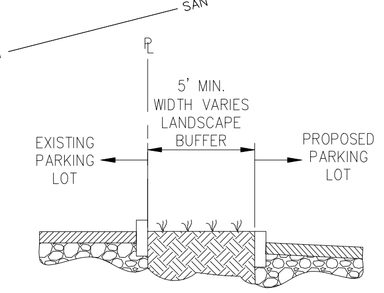

SITE X-SECTION A-A

SCALE : NTS

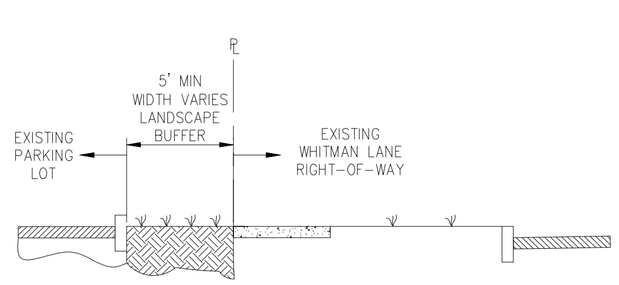

SITE X-SECTION B-B

SCALE : NTS

CONTRACTOR NOTE:

ALL EXISTING UTILITIES SHOWN ON PLANS ARE TO BE VERIFIED HORIZONTALLY AND VERTICALLY PRIOR TO ANY CONSTRUCTION. ALL EXISTING FEATURES INCLUDING BURIED UTILITIES ARE SHOWN AS INDICATED ON RECORD MAPS AND SURVEYS FURNISHED BY OTHERS. WE ASSUME NO LIABILITY FOR THE ACCURACY OF THOSE RECORDS AND SURVEYS. CONTACT THE UTILITY OWNER/AGENCY FOR THE FINAL LOCATION OF EXISTING UTILITIES IN AREAS CRITICAL TO CONSTRUCTION.

UNDERGROUND SERVICE ALERT
ONE-CALL NUMBER
(800)424-5555
CALL TWO BUSINESS DAYS BEFORE YOU DIG

4TY Civil Engineering
Danny Paterson, P.E.
1923 W Fairview
Spokane, WA 99205
C: 509.209.7455
Email: 4TyCivil@gmail.com

DANNY LEE PATERSON
STATE OF WASHINGTON
44446
REGISTERED
PROFESSIONAL ENGINEER

REVISIONS

#	DESCRIPTION	DATE

PERMIT DRAWINGS
LIBERTY LAKE RETAIL

21801 E. COUNTRY VISTA DR.
LIBERTY LAKE, WA

GRADING PLAN

C3.0

4 TY NO.	1602	DRAWN	DLP
DATE	9-8-16	REVIEWED	DLP

REFERENCE NOTES:

1. EXISTING WATER SERVICE TAP TO BE STUBBED AND CAPPED 3' AWAY FROM BUILDING.
2. EXISTING SEWER SERVICE TAP TO BE STUBBED AND CAPPED 3' AWAY FROM BUILDING.
3. CONTRACTOR TO VERIFY THE EXISTING LOCATION OF THE EXISTING SEWER MAIN AND PROVIDE AND INSTALL A 6" SEWER SERVICE.
4. CONTRACTOR TO PROVIDE AND INSTALL A CLEANOUT WITH LID TO GRADE AND INVERT PER PLAN PER SPOKANE COUNTY STANDARD PLAN U-13.
5. CONTRACTOR TO PROVIDE AND INSTALL FIRE DEPARTMENT CONNECTION (FDC) PER DETAIL HERE ON.
6. AT EXISTING 2' WATER SERVICE STUB, LLSWD TO INSTALL DOMESTIC AND IRRIGATION METERS INSIDE VAULT.
7. 1.5" TYPE K COPPER OR HDPE DOMESTIC SERVICE TO THE BUILDING. MIN. DEPTH OF 5' WITH A 12 GAUGE TRACER WIRE AFFIXED TO PIPE EVERY 10'.
8. EXTEND 8" EXISTING FIRE SERVICE ONSITE.
9. CONTRACTOR TO INSTALL 8"X6"X8" TEE.
10. CONTRACTOR TO INSTALL NEW PRIVATE FIRE HYDRANT PER LLSWD STANDARDS.
11. 6" CLASS 50 DI FIRE SERVICE TO THE BUILDING. MIN. 5.5' DEPTH.
12. 6" DOUBLE DETECTOR CHECK CHECK ASSEMBLE INSTALLED VERTICALLY IN RISER ROOM.
13. 4' LINE TO FDC WITH CHECK VALVE INSIDE BUILDING ON RISER. USE 4" CLASS 51 DI TO 5' OUTSIDE BUILDING THEN TRANSITION TO CLASS 150 C900 PVC.
14. 4" CLASS 150 C900 PVC FDC LINE.
15. 1" IRRIGATION STUB, SEE LANDSCAPING PLAN FOR EXTENSION. MIN 5' DEPTH.
16. 6' SEWER LINE FROM RETAIL BUILDING THAT REQUIRES OIL/WATER SEPERATOR.
17. 6" WASTE LINE FROM RETAIL BUILDING THAT DOES NOT REQUIRE OIL/WATER SEPARATOR.
18. 1000 GAL OIL/WATER SEPARATOR TO BE INSTALLED BY CONTRACTOR.
19. AVISTA TO VERIFY GAS LOCATION AND TO RUN CONNECTION TO BUILDING AT THIS LOCATION.
20. TRAFFIC RATED CATCH BASIN PER SPOKANE COUNTY STANDARD PLANS NO. B-5 OR APPROVED EQUAL.
21. PLACE RIP-RAP AROUND OUTFALL IN EXISTING SWALE TO DISSIPATE THE FLOWS. 5' BY 5' AREA MINIMUM.
22. ROOF DOWNSPOUT LOCATION. DOWNSPOUTS TO BE CONNECTED WITH WYE'S TO 6" DRAIN PIPE SHOWN. DRAIN PIPE CONNECTS DIRECTLY TO DRYWELL.
23. SPOKANE COUNTY TYPE 1 DRYWELL WITH SOLID LID, COLLECTS NON POLLUTION FLOWS FROM ROOF DRAINS ONLY.
24. SEWER CROSSES UNDER WATER, MAINTAIN 2.5' MINIMUM AND SLEEVE SEWER AT CROSSING.

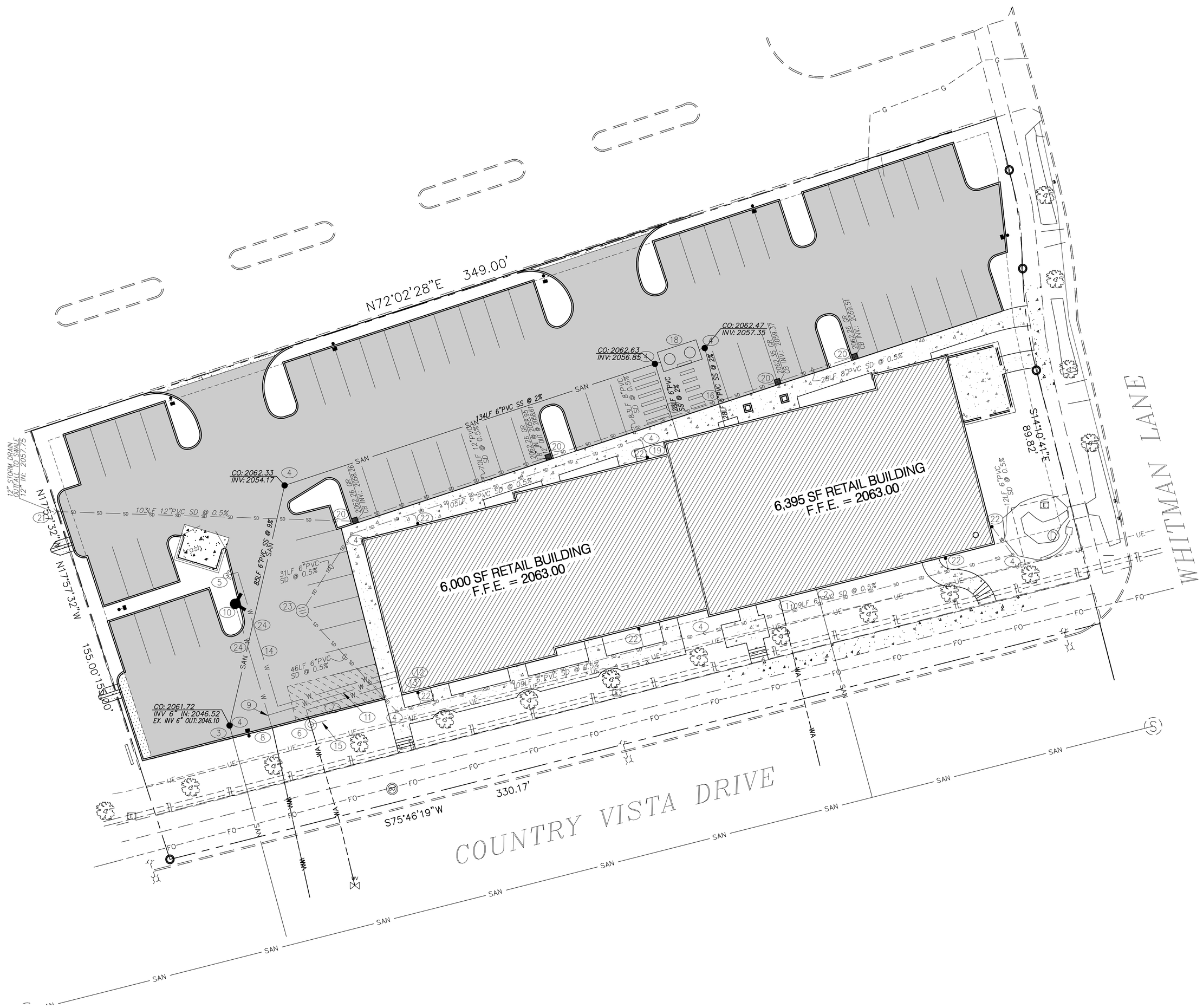

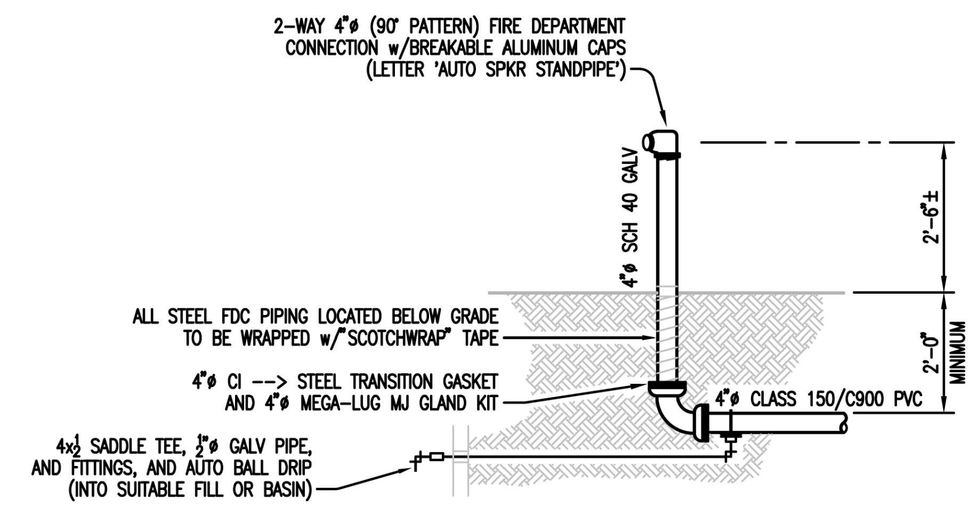

Fire Department Connection Detail

elevation view — **3/8"=1'-0"**

GRAPHIC SCALE

20 0 10 20

(IN FEET)
1 inch = 20 ft.

CONTRACTOR NOTE:

ALL EXISTING UTILITIES SHOWN ON PLANS ARE TO BE VERIFIED HORIZONTALLY AND VERTICALLY PRIOR TO ANY CONSTRUCTION. ALL EXISTING FEATURES INCLUDING BURIED UTILITIES ARE SHOWN AS INDICATED ON RECORD MAPS AND SURVEYS FURNISHED BY OTHERS. WE ASSUME NO LIABILITY FOR THE ACCURACY OF THOSE RECORDS AND SURVEYS. CONTACT THE UTILITY OWNER/AGENCY FOR THE FINAL LOCATION OF EXISTING UTILITIES IN AREAS CRITICAL TO CONSTRUCTION.

UNDERGROUND SERVICE ALERT
ONE-CALL NUMBER
(800)424-5555
CALL TWO BUSINESS DAYS BEFORE YOU DIG

Danny Paterson, P.E.
1923 W Fairview
Spokane, WA 99205
C: 509.209.7455
Email: 4TyCivil@gmail.com

4 Civil Engineering

DANNY LEE PATTERSON — STATE OF WASHINGTON — 44446 — REGISTERED PROFESSIONAL ENGINEER

REVISIONS		
#	DESCRIPTION	DATE

PERMIT DRAWINGS
LIBERTY LAKE RETAIL

21801 E. COUNTRY VISTA DR.
LIBERTY LAKE, WA

UTILITY PLAN

C4.0

4 TY NO.	1602	DRAWN	DLP
DATE	9-8-16	REVIEWED	DLP

STORM DRAINAGE NOTES:

1. DRAINAGE PONDS SHALL BE CONSTRUCTED PER THE REQUIREMENTS OF THESE DRAWINGS, INCLUDING GRADING, SOD OR SEED AS NOTED, AND DRYWELL INSTALLATION. SEE NOTE 4 FOR DRAINAGE PONDS THAT SHALL INCLUDE AN IRRIGATION SYSTEM. NO BARK, GRAVEL OR CINDERS ARE ALLOWED IN SWALE. TREES MAY NOT BE PLANTED IN TREATMENT AREA OF SWALES NOR IN GRASSY DITCHES THAT CONVEY STORM WATER TO SWALES.

2. INSTALL "GEOTEX" #4545 FILTER FABRIC (OR APPOVED EQUIVALENT) IN ALL DRYWELLS. SEE THE SPOKANE COUNTY STANDARDS FOR INSTALLATION LOCATIONS. FOR CONSTRUCTION OF DRYWELLS, INSTALL FILTER FABRIC (GEOTEX #4545 OR APPROVED EQUIVALENT) BETWEEN THE WASHED DRAINROCK AND THE NATIVE SOILS.

3. ALL DRAINAGE PONDS WITHIN THE SCOPE OF THIS PROJECT SHALL BE COMPLETED DURING THE CONSTRUCTION OF THE PARKING AREAS. THE CONTRACTOR SHALL PERFORM THE POND GRADE WORK AND INSTALL THE IRRIGATION SYSTEM AND SOD FOLLOWING THE ROADWAY/PARKING AREA PAVING WORK.

4. ALL DRAINAGE PONDS LISTED IN NOTE #3 ARE TO BE IRRIGATED BY AN AUTOMATIC IRRIGATION SYSTEM INSTALLED BY OR UNDER THE DIRECTION OF THE LANDSCAPE CONTRACTOR. THE IRRIGATION IS TO COMPLY WITH ALL LOCAL CODES AND ORDINANCES (90 DAY GUARANTEE) AND AN APPROVED BACKFLOW DEVICE IS TO BE INSTALLED TO PREVENT WATER FROM GOING BACK INTO THE WATER SUPPLY.

5. THE FLOOR OF A GRASSED PERCOLATION AREA (GPA) POND INCLUDES THE LEVEL PORTION OF THE FLOOR OF THE POND, AND THE SIDESLOPES OF THE POND OVERFLOW ELEVATION OR TOP OF DRYWELL. THE SOIL LOCATED IN THE FLOOR OF THE CONTAINMENT POND SHALL BE A MEDIUM TO WELL – DRAINING MATERAL, WITH A MINIMUM INFILTRATION RATE OF 0.5 INCHES PER HOUR OR GREATER. THE POND FLOOR MATERIAL SHALL BE INSTALLED TO A NATIVE SOIL STRATUM WHICH ALSO MEETS OR EXCEEDS THIS MINIMUM PERCOLATION RATE OF 0.5 INCHES PER HOUR.

6. SLEEVING: PROVIDE SLEEVING AS REQUIRED UNDER SIDEWALKS, PATHS, CURBING, PAVING, ETC. AS NEEDED FOR IRRIGATION ACCESS. ALL SLEEVING TO BE 4" PVC WITH AT LEAST 12" OF COVER. THE GENERAL CONTRACTOR IS RESPONSIBLE FOR INSTALLING SLEEVING BEFORE CURBING, SIDEWALKS, PAVING, ETC. ARE INSTALLED. PATCH ASPHALT AS NEEDED.

7. WATER–POWER SUPPLY FOR POND IRRIGATION: THE GENERAL CONTRACTOR IS TO SUPPLY WATER TAP(S) FOR HOOK–UP AND SUPPLY POWER FOR CONTROLLER.

8. POND BOTTOM ELEVATIONS SHOWN ON THESE PLANS ARE FINISHED GRADE. CONTRACTOR SHALL ROUGH GRADE ALL PONDS TO 0.2' BELOW ELEVATIONS SHOWN TO ALLOW FOR FINAL PLACEMENT OF SOD.

EROSION AND SEDIMENT CONTROL NOTES:

GENERAL EROSION CONTROL NOTES

1. AN EROSION/SEDIMENTATION CONTROL (ESC) PLAN IS REQUIRED FOR THIS PROJECT. IMPLEMENTATION OF THE ESC PLAN, AND CONSTRUCTION, MAINTENANCE, AND UPGRADING OF THE ESC FACILITIES ARE THE RESPONSIBILITY OF THE CONTRACTOR UNTIL ALL CONSTRUCTION IS COMPLETED AND ACCEPTED BY THE CITY OF LIBERTY LAKE, OR UNTIL VEGETATION IS ESTABLISHED THROUGHOUT THE SITE, AND ACCEPTED BY THE CITY OF LIBERTY LAKE, WHICHEVER IS LATER.

2. APPROVAL OF THE ESC PLAN DOES NOT CONSTITUTE APPROVAL OF ANY OF THE PROPOSED ROAD, STORM DRAINAGE, GRADING, OR UTILITY DESIGN ELEMENTS SHOWN ON THE ESC PLAN.

3. THE EROSION/SEDIMENTATION CONTROL MEASURES SHOWN ARE THE MINIMUM REQUIREMENTS OF THE ANTICIPATED SITE CONDITIONS. THE CONTRACTOR SHALL INSPECT AND MAINTAIN THESE ESC MEASURES DAILY, AND SHALL MAINTAIN AND UPGRADE THESE MEASURES AS NECESSARY TO PREVENT SEDIMENT–LADEN WATER FROM EITHER FLOWING OFF SITE, OR INTO NEW/EXISTING STORM DRAINAGE FACILITIES, SUCH AS DRYWELLS, CULVERTS, OR GRAVEL GALLERIES.

4. CONTRACTOR IS RESPONSIBLE FOR INSTALLING THE ROCK CONSTRUCTION ENTRIES AT ANY AND ALL LOCATIONS USED TO ENTER OR EXIT THE PROJECT SITE.

5. ANY DISTURBED AREAS, EXCEPT FOR POND BOTTOM AND SLOPES, WHICH WOULD BE LEFT BARE FOR MORE THAN 7 DAYS AND NOT INTENDED TO BE REWORKED WITHIN 30–45 DAYS SHALL BE SEEDED WITH A FAST STARTING NATIVE DRYLAND GRASS SUCH AS ANNUAL RYE, OR APPROVED EQUAL AT A RATE OF 60 LBS./ACRE.

6. GRADED AREAS, THAT WILL BE LEFT BARE FOR MORE THAN 7 DAYS, SHALL HAVE A MULCH APPLIED AT A RATE OF TWO THOUSAND (2,000) POUNDS PER ACRE. MULCH SHALL BE A VIRGIN WOOD CELLULOSE FIBER SPECIALLY PROCESSED AS A HYDROSEEDING MULCH AND CONTAINING NO GROWTH OR GERMINATION INHIBITING FACTORS. IF POND CONSTRUCTION HAS BEEN COMPLETED, INCLUDING DRAINAGE STRUCTURES AND HAVE RECEIVED FINAL INSPECTION APPROVAL, THEY SHALL BE SODDED. BASED UPON DIRECTION FROM THE INSPECTOR, A TACKFIER MAY BE REQUIRED.

7. DUST CONTROL: AN APPROVED METHOD OF DUST CONTROL, MEETING THE REQUIREMENTS OF LOCAL REGULATIONS, SHALL BE UTILIZED DURING CONSTRUCTION OF THIS PROJECT. THE CONTRACTOR SHALL BE RESPONSIBLE FOR ANY MATERIALS THAT SPILL ONTO LOCAL STREETS DURING THE TRANSPORTATION OF THE EQUIPMENT. SHOULD A SPILL OCCUR, THE CONTRACTOR SHALL REMOVE THE MATERIAL BY THE END OF THE WORK DAY. NO MATERIAL SHALL BE ALLOWED TO SET, DRY, OR BE WASHED INTO ADJACENT STORMWATER FACILITIES.

8. GEOTEXTILE FABRIC IS TO BE PLACED ON THE RIMS OF DRYWELLS, CATCH BASINS, AND INLETS UNTIL SUCH TIME AS THE VEGETATION ON THE SITE IS ESTABLISHED AND THE THREAT OF SEDIMENT DEPOSITION INTO THE DRAINAGE SYSTEM IS MITIGATED.

9. THE CONTRACTOR SHALL PROTECT ALL CATCH BASINS, DRYWELLS, AND OTHER STORM DRAINAGE STRUCTURES FROM BEING CONTAMINATED WITH SILT BY INSTALLING FILTER FABRIC OVER THE METAL FRAME DURING CONSTRUCTION AND KEEPING IT IN PLACE UNTIL THE STREET HAS BEEN PAVED AND CLEANED.

EROSION CONTROL MAINTENANCE NOTES

1. SEDIMENT BARRIERS SHALL BE INSPECTED IMMEDIATELY AFTER EACH RUNOFF–PRODUCING RAINFALL AND AT LEAST DAILY DURING PROLONGED RAINFALL (24 CONTINUOUS HOURS OR 48 HOURS IN ANY ONE WEEK).

2. NECESSARY REPAIRS TO BARRIERS OR REPLACEMENT OF BARRIERS SHALL BE ACCOMPLISHED PROMPTLY.

3. SEDIMENT DEPOSITS SHOULD BE REMOVED AFTER EACH RUNOFF–PRODUCING RAINFALL. THEY MUST BE REMOVED WHEN THE LEVEL OF DEPOSITION REACHES APPROXIMATELY ½ THE HEIGHT OF THE FILTER FABRIC BARRIER, OR ½ THE DEPTH OF THE CUTOFF DITCH, OR ½ THE VOLUME OF THE SEDIMENT POND.

4. ANY SEDIMENT DEPOSITS REMAINING IN PLACE AFTER THE ESC STRUCTURE IS NO LONGER REQUIRED SHALL BE DRESSED TO CONFORM TO THE EXISTING GRADE, PREPARED, AND HYDRO/HAND SEEDED AT THE SAME RATE AS THE POND.

5. ALL TEMPORARY AND PERMANENT ESC PRACTICES SHALL BE MAINTAINED AND PREPARED AS NEEDED TO ASSURE CONTINUED PERFORMANCE OF THEIR INTENDED FUNCTION.

6. ALL TEMPORARY ESC MEASURES SHALL BE REMOVED WITHIN 30 DAYS AFTER FINAL SITE STABILIZATION IS ACHIEVED OR AFTER THE TEMPORARY ESC MEASURES ARE NO LONGER NEEDED. TRAPPED SEDIMENT SHALL BE REMOVED OR STABILIZED ON SITE. DISTURBED SOIL AREAS RESULTING FROM REMOVAL WITHOUT PERMISSION OF THE ENGINEER OR INSPECTOR THAT RESULT IN CONTAMINATION OF THE DRYWELLS SHALL BE THE CONTRACTOR'S SOLE RESPONSIBILITY TO REMEDY. REMEDY MAY ENTAIL DRYWELL CLEANING OR REMOVAL AND RECONSTRUCTION.

UTILITY NOTES:

1. CONTRACTOR TO COORDINATE WITH AVISTA UTILITIES. THE SIZE AND ROUTE OF THE GAS SERVICE, GAS DISTRIBUTION MANIFOLDS AND METER SHALL BE LOCATED INSIDE OR OUTSIDE BUILDING AS REQUIRED BY AVISTA UTILITIES

2. CONTRACTOR SHALL COORDINATE NEW PHONE SERVICE WITH QWEST COMMUNICATIONS.

3. SEWER LINES MUST BE LAID 10 FEET HORIZONTALLY FROM ANY EXISTING OR PROPOSED WATER LINES. THE DISTANCE SHALL BE MEASURED EDGE TO EDGE.

4. SEWER LINES CROSSING WATER LINES SHALL BE LAID TO PROVIDE A MINIMUM VERTICAL DISTANCE OF 18 INCHES BETWEEN THE OUTSIDE OF THE SEWER AND THE BOTTOM OF THE WATER WITH THE SEWER LINE BELOW THE WATER LINE. IF THIS CANNOT BE ACHIEVED, THE SEWER LINE MUST BE ENCASED 10 FEET ON EACH SIDE OF CROSSING WITH A CONTINUOUS 20 FOOT LENGTH OF C900 PVC PIPE.

5. ALL DRAINAGE AND UTILITY RIM ELEVATIONS SHOULD BE ADJUSTABLE 0.5 FT UP OR DOWN TO MATCH FINISHED GRADE.

6. CONTRACTOR SHALL COORDINATE WITH AVISTA UTILITIES FOR POWER SERVICE TO BUILDING.

7. WATER PIPE SHALL BE INSTALLED 4.5 FEET MIN. AND 5.5 FEET MAX. BELOW FINISHED GRADE.

WATER CONSTRUCTION NOTES:

1. ALL WATER SYSTEM WORK SHALL BE IN ACCORDANCE WITH LLSWD GENERAL CONSTRUCTION SPECIFICATIONS FOR WATER PIPELINES.

2. WATERLINES SHALL BE INSTALLED WITH TOP OF PIPE ELEVATIONS A MINIMUM OF 4.5' BELOW FINISHED GRADE UNLESS OTHERWISE NOTED. PROVIDE TRENCHING AND BEDDING PER LLSWD GENERAL CONSTRUCTION SPECIFICATIONS FOR WATER PIPELINES. WATER PIPELINES SHALL BE CONSTRUCTED ON A CONTINUOUS POSITIVE GRADE FROM THE VAULT TO THE BUILDING WITH NO ADVERSE GRADE. THERE SHALL BE NO HIGH POINTS IN THE PIPELINE.

3. NO UTILITIES SHALL BE INSTALLED WITHIN 5' PARALLEL TO WATER SERVICE LINES.

4. ALL PIPE AND SERVICES 6" AND LARGER SHALL BE INSTALLED WITH CONTINUOUS TRACER WIRE (#9) ALONG THE PIPELINE AND BROUGHT UP TO THE GROUND SURFACE INSIDE ALL VALVE BOXES.

5. ALL WATER MAINS SHALL BE STAKED FOR GRADES AND ALIGNMENT BY AN ENGINEERING OR SURVEYING FIRM CAPABLE OF PERFORMING SUCH WORK.

6. WHERE CONNECTIONS REQUIRE "FIELD VERIFICATION," CONNECTION POINTS SHALL BE EXPOSED BY THE CONTRACTOR AND FITTINGS VERIFIED 48 HOURS PRIOR TO DISTRIBUTION OF SHUTDOWN NOTICES.

7. AT ANY CONNECTION TO AN EXISTING LINE WHERE A NEW VALVE IS NOT INSTALLED, THE EXISTING VALVE MUST BE PRESSURE TESTED PRIOR TO CONNECTION. IF AN EXISTING VALVE FAILS TO PASS THE TEST, THE CONTRACTOR SHALL MAKE THE NECESSARY PROVISIONS TO TEST THE NEW LINE PRIOR TO CONNECTION TO THE EXISTING SYSTEM OR SHALL INSTALL A NEW VALVE.

8. WHEN FIRE FLOW WILL BE INTERRUPTED, THE FIRE DISTRICT #1 SHALL BE GIVEN 24 HOURS NOTICE OF TIME AND LOCATIONS AFFECTED.

9. DEFLECTIONS AT PIPE JOINTS SHALL NOT EXCEED 75% OF MAXIMUM ALLOWED DEFLECTION, PER MANUFACTURER'S RECOMMENDATIONS.

10. PIPE RESTRAINMENT SHALL BE INSTALLED AT ALL BENDS (VERTICAL AND HORIZONTAL), TEES, CROSSES, PLUGS, AND VALVES.

11. LOCATION OF EXISTING WATER MAINS AND SERVICES SHOWN ARE APPROXIMATE AND ONLY BASED ON INFORMATION PROVIDED BY SURVEYOR. CONTRACTOR TO VERIFY ALL LOCATIONS PRIOR TO CONSTRUCTION.

12. NEW WATER LINES SHALL BE TESTED FOR 2 HOURS AT NO LESS THAN 225 PSI IN ACCORDANCE WITH LLSWD SPECIFICATIONS.

SANITARY SEWER CONSTRUCTION NOTES:

1. FIELD VERIFY ALL ELEVATIONS BEFORE STARTING CONSTRUCTION.

2. ALL SEWER CONSTRUCTION PROCEDURES AND MATERIALS SHALL BE IN ACCORDANCE WITH LLSWD CONSTRUCTION SPECIFICATIONS.

3. ALL SIDE SEWER LINES SHALL BE AS INDICATED ON THE PLANS.

4. ALL SEWER LINES AND WATER LINES SHALL BE LOCATED TO MEET STATE SEPARATION REQUIREMENTS.

5. ALL SIDE SEWERS THAT THE CONTRACTOR IS UNABLE TO MAINTAIN A MINIMUM OF 18" COVER AT WATER MAIN CROSSINGS OR THAT THE SIDE SEWER MUST CROSS ABOVE THE WATER, THE CONTRACTOR SHALL SLEEVE THE SIDE SEWER WITH CONTINUOUS 20' SECTION OF C900 PVC SEWER PIPE CENTERED ON THE CROSSING.

6. SANITARY SEWER PIPE SHALL BE PVC ASTM D 3034, SDR 35, OR ASTM F 789 WITH PUSH–ON JOINTS AND RUBBER GASKETS CONFORMING TO ASTM D 3212 AND ASTM F 477. PROVIDE TRENCHING AND BEDDING PER LLSWD STANDARDS.

7. ALL SEWER LINES SHALL BE FIELD STAKED FOR GRADES AND ALIGNMENT BY A LICENSED ENGINEERING OR SURVEYING FIRM QUALIFIED TO PERFORM SUCH WORK.

PAVING NOTES:

1. ALL CONSTRUCTION SHALL BE DONE IN ACCORDANCE WITH THE CITY OF LIBERTY LAKE AND WSDOT STANDARD DRAWINGS AND SPECIFICATIONS (LATEST EDITION) UNLESS OTHERWISE NOTED. IF THERE ARE ANY CONFLICTS, THE CITY OF LIBERTY LAKE SPECIFICATIONS SHALL GOVERN.

2. CONTRACTOR SHALL CONTACT ALL APPROPRIATE UTILITY COMPANIES AND THE CITY OF LIBERTY LAKE TO OBTAIN NECESSARY LOCATES 48 HOURS BEFORE CONSTRUCTION BEGINS.

3. CONCRETE, AGGREGATE BASE AND ASPHALTIC MIX DESIGN SHALL BE SUBMITTED BY THE SUPPLIER AND APPROVED IN WRITING BY THE OWNER PRIOR TO ANY ROAD OR PARKING LOT CONSTRUCTION. MATERIALS SHALL BE IN CONFORMANCE WITH THE RECOMMENDATIONS IN THE SOILS REPORT (IF ONE IS COMPLETED).

4. ALL EXISTING PAVEMENT SHALL BE REMOVED IN THE SECTIONS REQUIRING REMOVAL AND REPLACEMENT. THE EXISTING BASE COURSE MATERIALS IN THESE SECTIONS SHALL BE COMPACTED TO A MINIMUM OF 95% OF MODIFIED PROCTOR DRY DENSITY @ +/–95% OF THE OPTIMUM MOISTURE CONTENT. ALL COMPACTION SHALL BE DONE IN ACCORDANCE WITH ASTM D–1557. THE NEW PAVEMENT SHALL BE REPLACED TO A DEPTH OF THE PAVEMENT DETAIL SHOWN IN THESE PLANS.

5. ASPHALT/CONCRETE PAVING SHALL CONFORM TO WSDOT STANDARD SPECIFICATIONS (2004) DIVISION 9, HMA CLASS 1/2". ASPHALT PAVED AREAS SHALL BE A MINIMUM OF 2 INCHES OF ASPHALT/CONCRETE PLACED OVER A MINIMUM OF 4 INCHES OF FREE–DRAINING, COMPACT, GRANULAR BASE MATERIAL CONFORMING TO THE FOLLOWING PARTICLE SIZE DISTRIBUTION:

PASSING 1" SQUARE SIEVE	100%
PASSING 3/4" SQUARE SIEVE	95 – 100%
PASSING 3/8" SQUARE SIEVE	50 – 75%
PASSING 1/4" SQUARE SIEVE	15 – 40%
PASSING U.S. NO. 40 SIEVE	10 – 30%
PASSING U.S. NO. 200 SIEVE	8% MAX.

6. ALL AREAS TO BE PAVED SHALL BE CLEARED OF ALL GRASS, ROOTS, TRASH, METAL AND ORGANIC MATERIALS DOWN TO FULL DEPTH BELOW THE PAVING MAT. THE EXPOSED SURFACE SHOULD THEN BE PROOF ROLLED TO 95% OF MAXIMUM COMPACTION AS DETERMINED BY ASTM D–1557 USING A MECHANICAL VIBRATORY COMPACTOR. ANY BACK FILL MATERIAL SHOULD BE SIMILARLY COMPACTED.

7. BEFORE PLACING THE BASE MATERIAL, THE SURFACE OF THE SUBGRADE SHALL BE COMPACTED TO 95% OF MAXIMUM DENSITY AS DETERMINED BY ASTM D–1557. THE GRANULAR BASE MATERIAL SHALL BE PLACED IN LAYERS NOT EXCEEDING 3 INCHES IN THICKNESS AND COMPACTED TO 95% OF MAXIMUM DENSITY AS DETERMINED BY ASTM D–1557. PLACE THE BASE MATERIAL OVER GEOTEXTILE SUCH AS MIRAFI 500X (OR APPROVED EQUAL) WHERE SUBGRADE IS TOO MOIST TO ACHIEVE SPECIFIED COMPACTION. SWELL TESTS PERFORMED AT 200 PSF SEATING LOAD INDICATE THAT 1.0 FT OF MOISTURE TREATMENT SHALL BE APPLIED TO THE SUBGRADE SOILS.

8. BITUMINOUS TACK COAT SHALL BE APPLIED BETWEEN ASPHALT PAVING LIFTS AND SHALL BE USED PRIOR TO OVERLAY, (CSS–1H), 50:50 DILUTION, 0.05 GAL/SY TO 0.15 GAL/SY OR AS DIRECTED BY THE ENGINEER. ALL EDGES ABUTTING NEW PAVEMENT SHALL BE TACKED.

9. ALL VALVE AND MANHOLE COVERS SHALL BE ADJUSTED TO PAVEMENT GRADE DURING INITIAL CONSTRUCTION.

10. ALL TRAFFIC CONTROL, IF REQUIRED, SHALL CONFORM TO THE APPLICABLE REGULATIONS SET FORTH IN THE MANUAL ON UNIFORM TRAFFIC CONTROL DEVICES (MUTCD).

11. ALL THE OPERATIONS SHALL CONFORM TO THE APPLICABLE REGULATIONS SET FORTH BY WISAA.

GRADING NOTES:

1. EXCAVATION AND EMBANKMENT SHALL BE IN ACCORDANCE WITH APPLICABLE REQUIREMENTS OF THE WSDOT STANDARD SPECIFICATIONS. ALL COMPACTION OF SUBGRADES, ROCK, AND ASPHALT SHALL BE IN ACCORDANCE WITH WSDOT STANDARD SPECIFICATIONS.

2. ALL FINISHED GRADING ELEVATIONS SHALL MATCH EXISTING ELEVATIONS AT THE SITE'S BOUNDARY, EXCEPT AS SHOWN OTHERWISE ON THE GRADING PLAN. WHERE CONFLICTS EXIST, THE CONTRACTOR SHALL NOTIFY THE OWNER TO RESOLVE THE ISSUE PRIOR TO PROCEEDING.

3. THE CONTRACTOR MAY WORK WITH THE OWNER AND ARCHITECT TO IDENTIFY ON–SITE BORROW OR WASTE SITES. CONTRACTOR SHALL VERIFY EARTHWORK QUANTITIES.

4. GRADING: ALL GRADING SHALL BE LIMITED TO THE AREAS IDENTIFIED IN THE GRADING PLAN AND SHALL NOT INFRINGE ON ADJACENT OWNERSHIPS, EXCEPT AS SHOWN OTHERWISE ON THE PLANS.

5. CUT SLOPES IN SOLID ROCK SHALL NOT EXCEED 1/2:1 (HORIZONTAL:VERTICAL), AND SOIL CUT SLOPES SHALL NOT EXCEED 2:1 (HORIZONTAL:VERTICAL), EXCEPT AS SHOWN OTHERWISE ON THE PLANS.

6. FILL SLOPES ACROSS THE PROPERTY SHOULD BE DESIGNED FOR A MAXIMUM SLOPE OF 2:1 (HORIZONTAL:VERTICAL), EXCEPT AS SHOWN OTHERWISE ON THE PLANS.

7. ALL CURB AND GUTTER, STREET GRADES, SIDEWALK GRADES, AND ANY OTHER VERTICAL AND OR HORIZONTAL ALIGNMENT SHALL BE STAKED BY AN ENGINEERING OR SURVEYING FIRM CAPABLE OF PERFORMING SUCH WORK.

8. FORM AND SUBGRADE INSPECTION BY THE INSPECTOR IS REQUIRED BEFORE POURING THE CONCRETE. TWENTY–FOUR HOURS NOTICE IS REQUIRED FOR FORM INSPECTION.

9. CONTRACTOR SHALL VERIFY AND MATCH THE EXISTING GRADES. WHERE APPLICABLE GRADES MAY NEED ADJUSTING TO PROVIDE A POSITIVE DRAINAGE SLOPE.

10. TOP OF CURB (T.C.) IS 0.5' ABOVE ACP OR CCP UNLESS OTHERWISE NOTED.

11. RIM ELEVATIONS OF UTILITY AND DRAINAGE STRUCTURES SHALL BE INSTALLED SO THAT RIMS MAY BE ADJUSTED ±0.5' TO MATCH FINISHED GRADE.

4TY Civil Engineering
Danny Paterson, P.E.
1923 W Fairview
Spokane, WA 99205
C: 509.209.7455
Email: 4TyCivil@gmail.com

REVISIONS		
#	DESCRIPTION	DATE

PERMIT DRAWINGS
LIBERTY LAKE RETAIL

21801 E. COUNTRY VISTA DR.
LIBERTY LAKE, WA

NOTES

C5.0

4 TY NO.	1602	DRAWN	DLP
DATE	9-8-16	REVIEWED	DLP

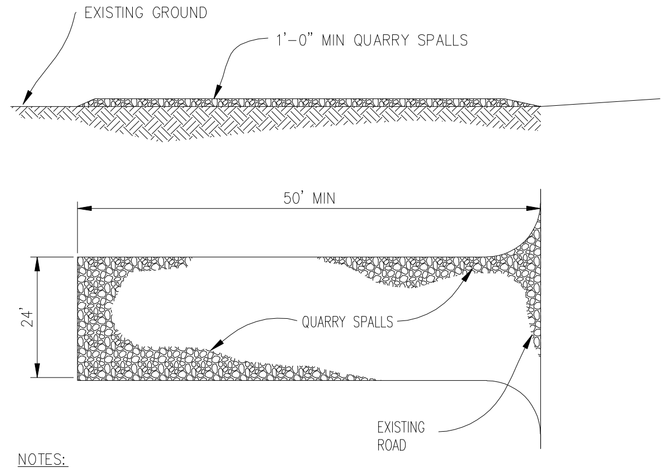

NOTES:

1. USE 4" TO 6" QUARRY SPALLS. MATERIAL WITH "FINES" IS NOT ACCEPTABLE.
2. THE 50' MINIMUM LENGTH SHALL BE LENGTHENED AS NECESSARY TO INSURE MATERIAL IS NOT TRACKED INTO THE PUBLIC RIGHT-OF-WAY.

CONSTRUCTION ENTRANCE (1)

SCALE : NTS

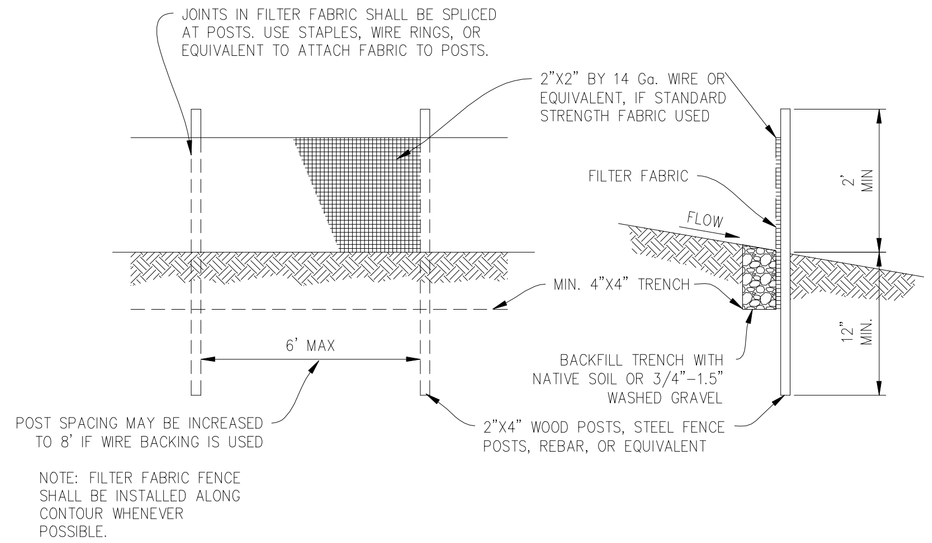

NOTE: FILTER FABRIC FENCE SHALL BE INSTALLED ALONG CONTOUR WHENEVER POSSIBLE.

MAINTENANCE STANDARDS

1. ANY DAMAGE SHALL BE REPAIRED IMMEDIATELY.
2. IF CONCENTRATED FLOWS ARE EVIDENT UPHILL OF THE FENCE, THEY MUST BE INTERCEPTED AND CONVEYED TO A SEDIMENT TRAP OR POND.
3. IT IS IMPORTANT TO CHECK THE UPHILL SIDE OF THE FENCE FOR SIGN OF THE FENCE CLOGGING AND ACTING AS A BARRIER TO FLOW AND THEN CAUSING CHANNELIZATION OF FLOWS PARALLEL TO THE FENCE. IF THIS OCCUR, REPLACE THE FENCE AND/OR REMOVE THE TRAPPED SEDIMENT.
4. SEDIMENT MUST BE REMOVED WHEN THE SEDIMENT IS 6" HIGH.
5. IF THE FILTER FABRIC HAS DETERIORATED DUE TO ULTRAVIOLET BREAKDOWN, IT SHALL BE REPLACED.

FILTER FABRIC FENCE DETAIL (2)

SCALE : NTS

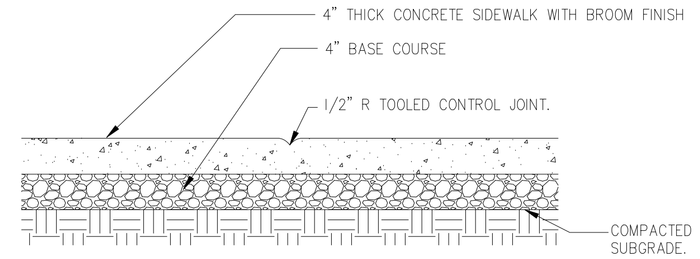

(5'-0" MAXIMUM SPACING IN SIDEWALKS)

TYP. CONTROL JOINT

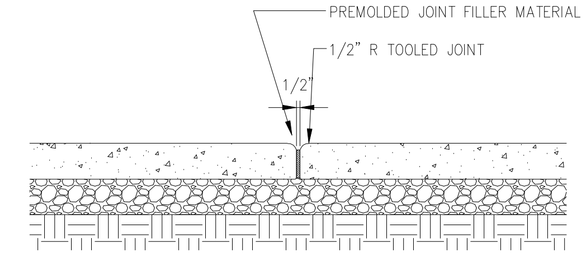

(50'-0" MAXIMUM SPACING IN SIDEWALKS)

TYP. EXPANSION JOINT

TYPICAL SIDEWALK DETAIL (3)

SCALE : NTS

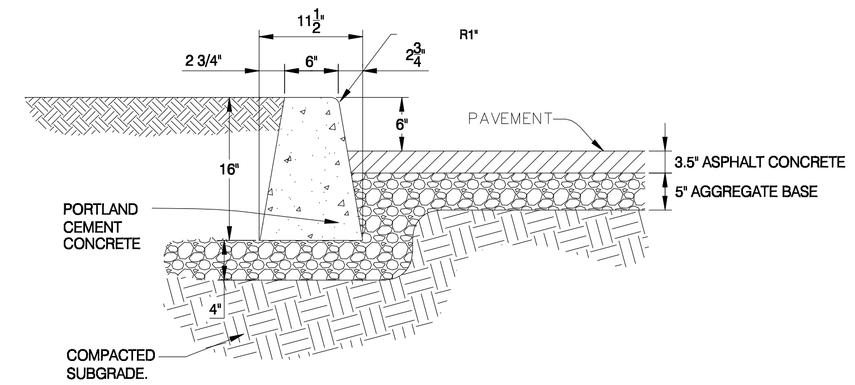

VERTICAL CURB (5)

SCALE : NTS

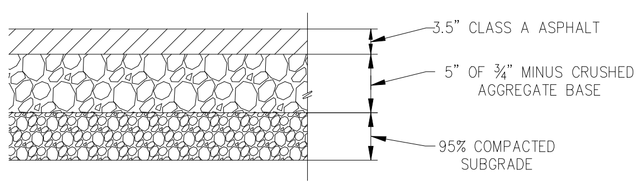

ASPHALT PAVEMENT SECTION (4)

SCALE : NTS

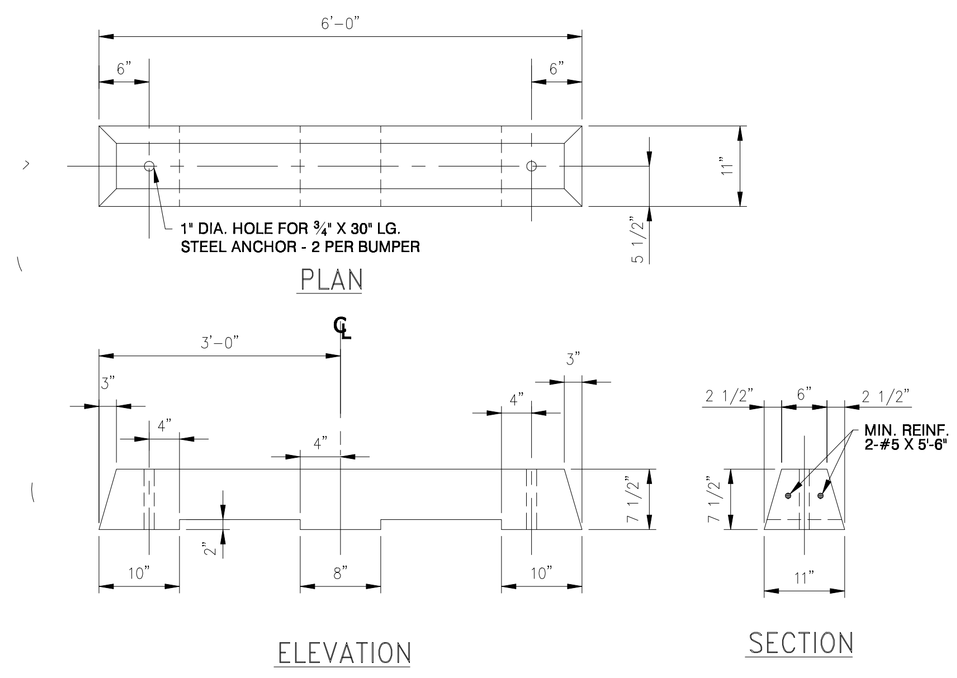

CONCRETE WHEEL STOP (7)

SCALE : NOT TO SCALE

Danny Paterson, P.E.
1923 W Fairview
Spokane, WA 99205
C: 509.209.7455
Email: 4TyCivil@gmail.com

Civil Engineering

DANNY LEE PATTERSON
STATE OF WASHINGTON
44446
REGISTERED
PROFESSIONAL ENGINEER

REVISIONS

#	DESCRIPTION	DATE

PERMIT DRAWINGS
LIBERTY LAKE RETAIL

21801 E. COUNTRY VISTA DR.
LIBERTY LAKE, WA

DETAILS

C6.0

4 TY NO.	1602	DRAWN	DLP
DATE	9-8-16	REVIEWED	DLP

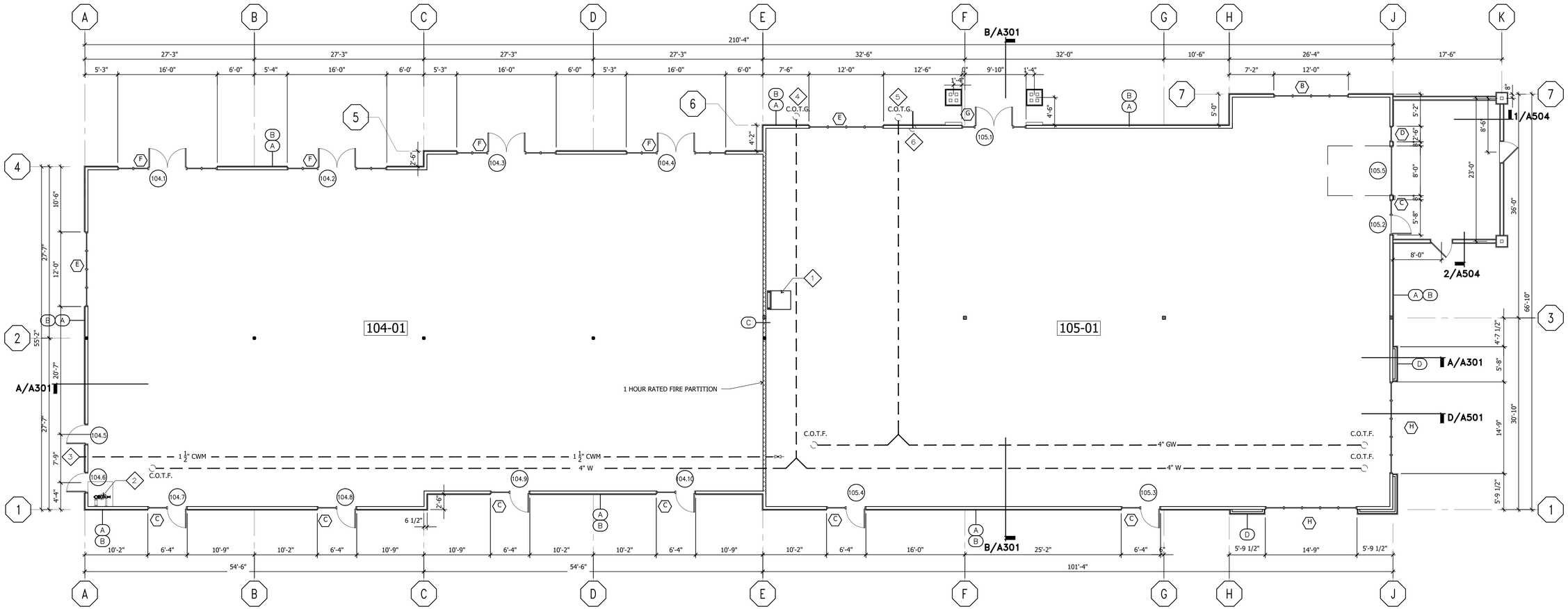

FLOOR PLAN

SCALE: 1/8" = 1'-0"

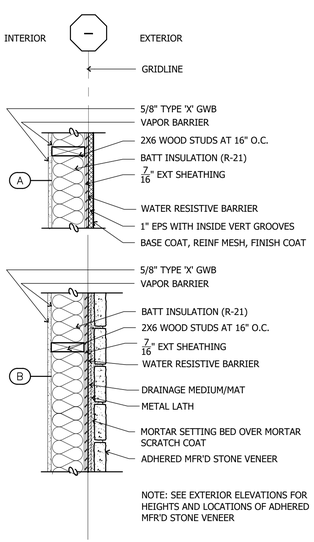

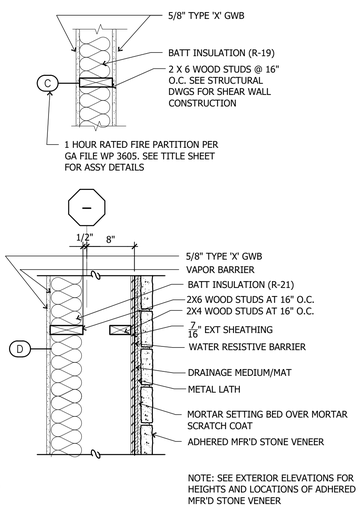

WALL TYPES

1. FOR ADDITIONAL NOTES AND LEGEND, SEE T101.
2. ALL DIMENSIONS TO FACE OF EXTERIOR SHEATHING, ROUGH OPENING, OR AS NOTED.

ARCHITECTURAL NOTES

####	ROOM NUMBER, SEE SCHEDULE
###	DOOR NUMBER, SEE SCHEDULE
X	WINDOW TYPE, SEE SCHEDULE
X	WALL TYPE
	NEW WALL
	FIRE RATED PARTITION

LEGEND

1	LADDER TO ROOF ACCESS ABOVE, COORDINATE LOCATION WITH TENANT IMPROVEMENT PLANS.
2	FIRE RISER, SEE NOTE 6 ON T101.
3	1 1/2" CW TO MAIN
4	4" TO SEWER - SEE CIVIL FOR CONTINUATION
5	4" TO GREASE TRAP. SEE CIVIL FOR CONTINUATION
6	2" VENT TO OUTLET FROM GREASE TRAP

KEY NOTES

(E)	EXISTING
ADA	AMERICANS WITH DISABILITIES ACT
AFF	ABOVE FINISHED FLOOR
ALUM	ALUMINUM
ANDZ	ANODIZED
BC	BABY CHANGER
BOB	BOTTOM OF BEAM
C/C	CENTER TO CENTER
CD	CONDENSATE DRAIN
CJ	CONTROL JOINT
CLG	CEILING
C-BRD	CEMENT BOARD
CG	CORNER GUARD
CLR	CLEAR
CMU	CONCRETE MASONRY UNIT
CONC	CONCRETE
CONST	CONSTRUCTION
CONT	CONTINUOUS
CPT	CARPET
CT	CERAMIC TILE
CW	CURTAIN WALL
D	DEPTH
DF	DRINKING FOUNTAIN
DN	DOWN
DS	DOWN SPOUT
EIFS	EXTERIOR INSULATION FINISH SYSTEM
ELEV	ELEVATION
ENAM	ENAMEL
EPDM	ETHYLENE PROPYLENE DIENE POLYMETHYLENE
EPOX	EPOXY
EQP	EQUIPMENT
EWC	ELECTRIC WATER COOLER
EXPD	EXPOSED
FBO	FURNISHED BY OTHERS
FD	FLOOR DRAIN
FE	FIRE EXTINGUISHER
FEC	FIRE EXTINGUISHER CABINET
FF	FINISHED FLOOR
FFIN	FACTORY FINISH
FND	FEMININE NAPKIN DISPENSER
FRP	FIBERGLASS REINFORCED PLASTIC
FS	FINISHED SURFACE
FOIC	FURNISHED BY OWNER, INSTALLED BY CONTRACTOR
GA	GAUGE
GALV	GALVANIZED
GB	GRAB BAR
GCS	GALVANIZED CARBON STEEL
GWB	GYPSUM WALL BOARD
GYP-C	GYPCRETE
HB	HOSE BIB
HC	HOLLOW CORE
HM	HOLLOW METAL
HORIZ	HORIZONTAL
HR	HOUR
L	LENGTH
LAV	LAVATORY
LS	LANDSCAPING
MATL	MATERIAL
MAX	MAXIMUM
MFRS	MANUFACTURERS
MIN	MINIMUM
MISC	MISCELLANEOUS
MTL	METAL
NIC	NOT IN CONTRACT
NTS	NOT TO SCALE
OFCI	OWNER FURNISHED, CONTRACTOR INSTALLED
OFOI	OWNER FURNISHED, OWNER INSTALLED
OSB	ORIENTED STRAND BOARD
P-#	PAINT TYPE NUMBER
PLAM	PLASTIC LAMINATE
PLWD	PLYWOOD
PM	PRESSED METAL
PRE	PRE FINISHED
PT	PRESSURE TREATED
PTD	PAPER TOWEL DISPENSER
RBR	RUBBER
RD	ROOF DRAIN
REFR	REFRIGERATOR
RM	ROOM
RO	ROUGH OPENING
RWL	RAIN WATER LEADER
S-TRD	STAIR TREAD
SAI	SOUND ATTENUATION INSULATION
SATC	SUSPENDED ACOUSTICAL TILE CEILING
SC	SOLID CORE
SCU	SCUPPER
SD	SOAP DISPENSER
SF	SQUARE FEET
SHT	SHEET
SHT-V	SHEET VINYL
SIM	SIMILAR
SLR	SEALER
SNV	SANITARY NAPKIN VENDOR
SPEC	SPECIFICATION
STL	STEEL
T&B	TOP AND BOTTOM
TBD	TO BE DETERMINED
TBR	TO BE REMOVED
TPD	TOILET PAPER DISPENSER
TOC	TOP OF CONCRETE
TSCD	TOILET SEAT COVER DISPENSER
TYP	TYPICAL
UNO	UNLESS NOTED OTHERWISE
UR	URINAL
VERT	VERTICAL
VCT	VINYL COMPOSITION TILE
VGB	VERTICAL GRAB BAR
VIN	VINYL
VWC	VINYL WALL COVERING
WC	WATER CLOSET
WD	WOOD
WH	WATER HEATER
WP	WORK POINT / WATER PROOF
WVP	WOOD VENEER PANEL
"X"	FIRE RESISTANT LABELED GWB
"XP"	FIRE AND MOLD RESISTANT GWB

ABBREVIATIONS

Reviewed RG
CAD File No. 16012-X-BASE-8-2-16
Date
Drawn RGE
Checked RG
No. REVISIONS/SUBMISSIONS

Seal

REGISTERED ARCHITECT 7904 ROBERT GARY UHRICH STATE OF WASHINGTON

THE CONTRACTOR SHALL CHECK AND VERIFY ALL ASPECTS OF THE WORK AND REPORT ERRORS AND/OR OMISSIONS TO THE ARCHITECT PRIOR TO COMMENCING WORK. ALL CONSTRUCTION SHALL CONFORM TO CODES AND ORDINANCES, LOCAL AND STATE LAWS IN EFFECT AT THE TIME OF CONSTRUCTION. DRAWINGS ARE DIAGRAMMATIC IN NATURE, AND DO NOT PURPORT TO REPRESENT ALL ITEMS REQUIRED FOR COMPLETION OF THE WORK. DRAWINGS SHALL NOT BE SCALED.

Robert Gary Uhrich, AIA
architecture and planning
41 Morgan Road
P.O. Box 820
Ardenvoir, WA 98802
P 509 ■ 763 ■ 8894

RGU architecture

CIVIL/STRUCTURAL ENGINEERING:
4TY ENGINEERING – SPOKANE WA
LANDSCAPE ARCHITECT
MTLA – LIBERTY LAKE WA
ELECTRICAL ENGINEERING
DEI ENGINEERING SPOKANE, WASHINGTON

KUNPENG LLC
RETAIL SHELL BUILDING
21801 E COUNTRY VISTA DR
LIBERTY LAKE WA

Drawing Title: FLOOR PLAN

Submittal: CONSTRUCTION
Date: 09/21/2016
Project No.
Scale: AS SHOWN

Drawing No.

A101

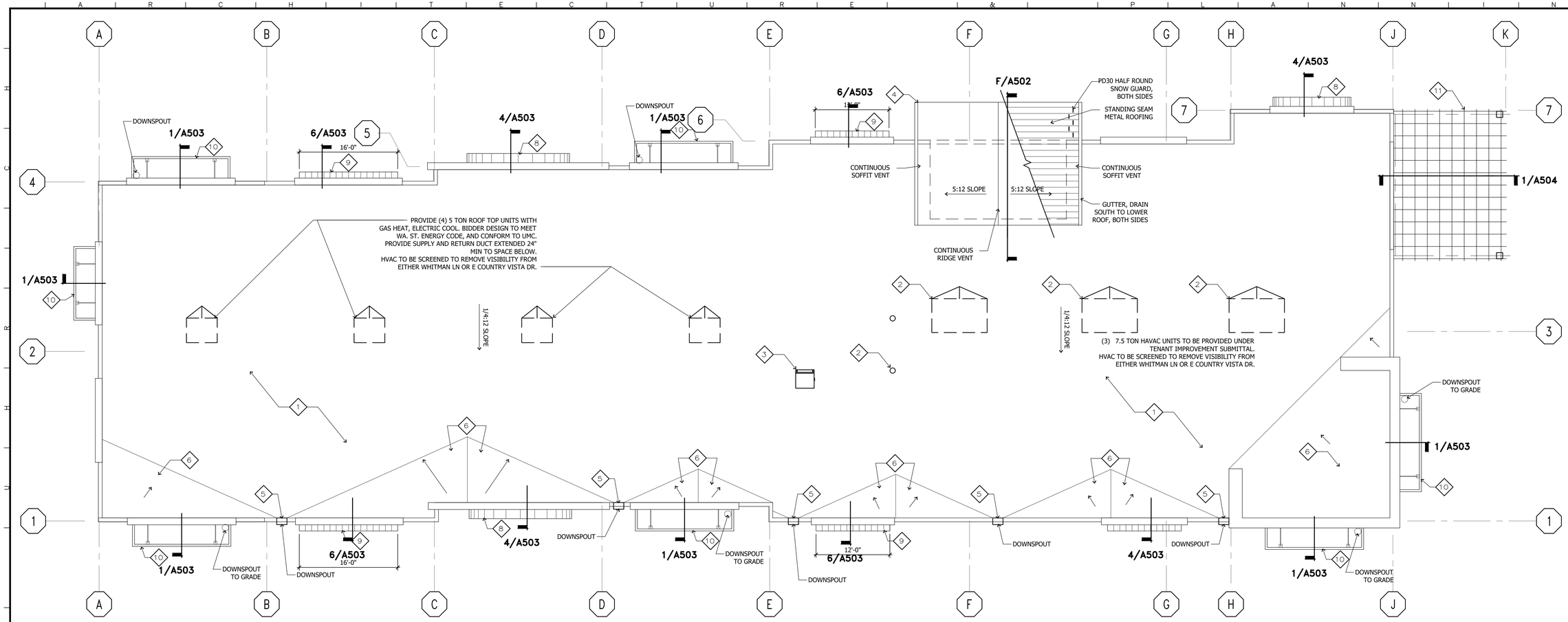

ROOF PLAN

SCALE: 1/8" = 1'-0"

1. MECHANICALLY FASTENED 60 MIL TPO MEMBRANE ROOFING OVER 1/4" PROTECTION BOARD ON +/- 7" LAYER POLYISO INSUL (R-38)
2. COORDINATE VENTS AND MECHANICAL UNIT LOCATIONS WITH TENANT IMPROVEMENT PLANS, SEE DETAILS 3 & 4/A102.
3. ROOF HATCH - 3'-0" W. x 3'-0" D., SEE DETAIL 1/A102. COORDINATE LOCATION WITH TENANT IMPROVEMENT DRAWINGS
4. PITCHED ROOF FEATURE, SEE SECTION F, A502 AND STRUCTURAL DRAWINGS.
5. THRU-WALL SCUPPER AND CONDUCTOR HEAD SEE DETAIL 2/A102.
6. PLYWOOD CRICKET W/ MIN 1/2" PER FOOT SLOPE.
7. EAVE, SEE DETAIL 7/A503.
8. BARREL VAULT CANOPY, SEE DERTAILS 2 THRU 4/A503 AND STRUCTURAL DRAWINGS.
9. MONO-PITCH CANOPY, SEE DETAILS 5 & 6/A503 AND STRUCTURAL DRAWINGS.
10. SUSPENDED CANOPY W/ INTEGRAL DOWNSPOUT, SEE DETAILS 5/A102 & 1/A503 AND STRUCTURAL DRAWINGS.
11. WOOD-FRAMED ARBOR, SEE DETAIL 1/A504 AND STRUCTURAL DRAWINGS.

FLAG NOTES

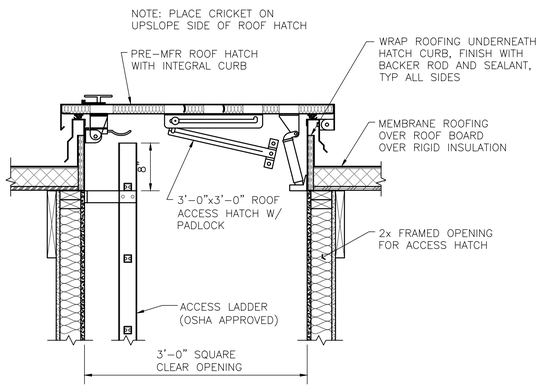

DETAIL 1

SCALE: 1" = 1'-0"

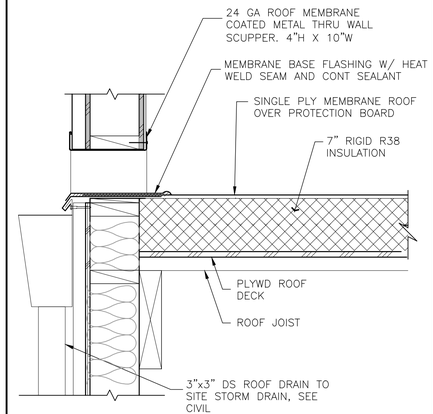

DETAIL 2

SCALE: 1 1/2" = 1'-0"

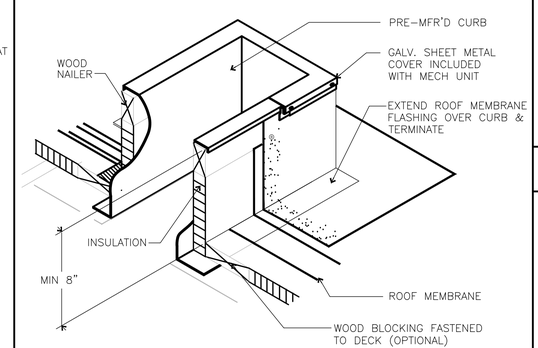

DETAIL 3

SCALE: 1 1/2" = 1'-0"

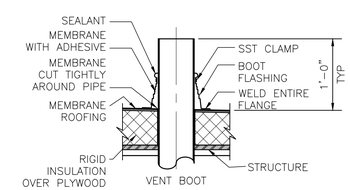

DETAIL 4

SCALE: 1" = 1'-0"

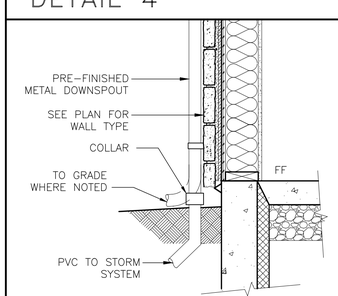

DETAIL 5

SCALE: 1" = 1'-0"

No.	REVISIONS/SUBMISSIONS	Date

Drawn RGE
Checked RG
Reviewed RG
CAD File No. 16012-X-BASE-8-2-16

Seal

REGISTERED ARCHITECT 7904 STATE OF WASHINGTON

THE CONTRACTOR SHALL CHECK AND VERIFY ALL ASPECTS OF THE WORK AND REPORT ERRORS AND/OR OMISSIONS TO THE ARCHITECT PRIOR TO COMMENCING WORK. ALL CONSTRUCTION SHALL CONFORM TO CODES AND ORDINANCES, LOCAL AND NATIONAL, IN EFFECT AT THE TIME OF CONSTRUCTION. DRAWINGS ARE DIAGRAMMATIC IN NATURE, AND DO NOT PURPORT TO REPRESENT ALL ITEMS REQUIRED FOR COMPLETION OF THE WORK. DRAWINGS SHALL NOT BE SCALED.

Robert Gary Uhrich, AIA
architecture and planning
41 Morgan Road
P.O. Box 829
Ancram, NY 12502
P 509 • 755 • 8804

RGU architecture

CIVIL/STRUCTURAL ENGINEERING:
4TY ENGINEERING – SPOKANE WA
LANDSCAPE ARCHITECT
MTLA – LIBERTY LAKE WA
ELECTRICAL ENGINEERING
DEI ENGINEERING SPOKANE, WASHINGTON

KUNPENG LLC
RETAIL SHELL BUILDING
21801 E COUNTRY VISTA DR
LIBERTY LAKE WA

Drawing Title: ROOF PLAN

Date 09/21/2016
Scale AS SHOWN
Submittal CONSTRUCTION
Project No.

Drawing No.

A102

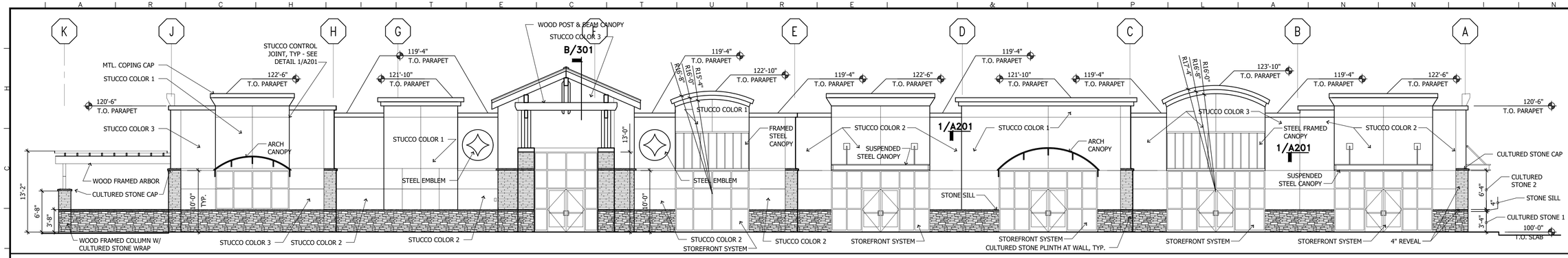

NORTH ELEVATION

SCALE: 1/8" = 1'-0"

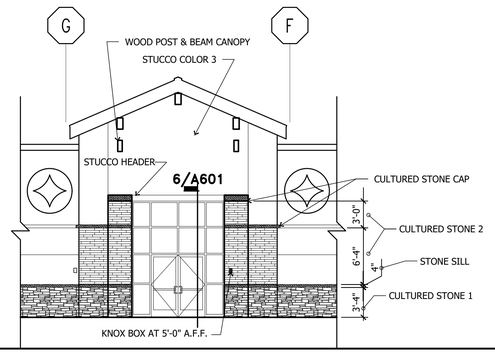

NORTH ELEVATION AT ENTRY

SCALE: 1/8" = 1'-0"

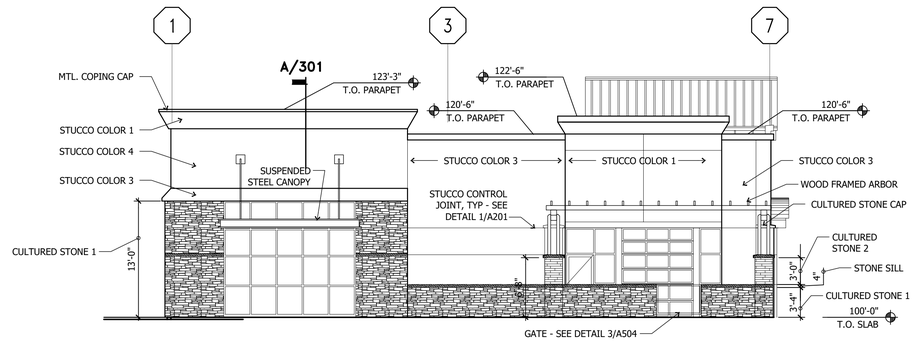

EAST ELEVATION AT ARBOR

SCALE: 1/8" = 1'-0"

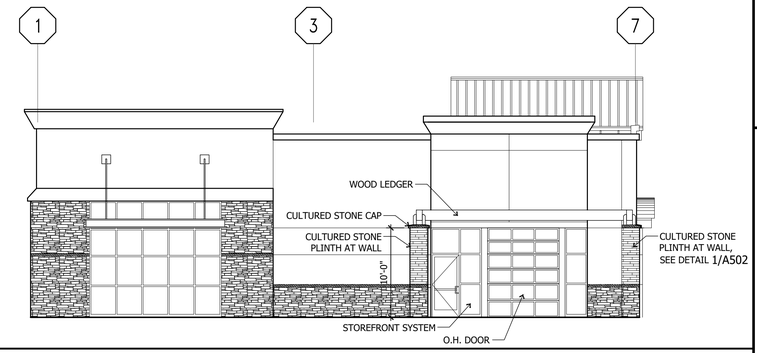

EAST ELEVATION

SCALE: 1/8" = 1'-0"

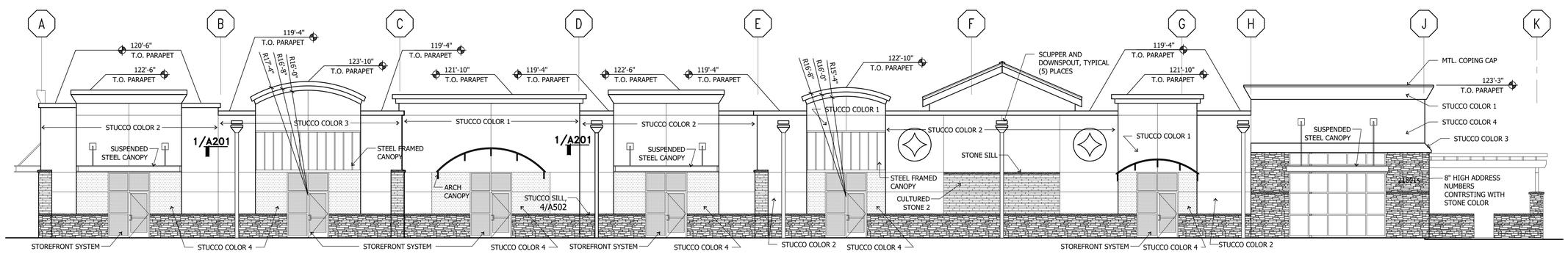

SOUTH ELEVATION

SCALE: 1/8" = 1'-0"

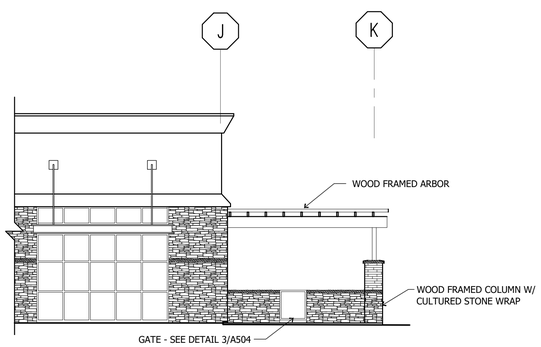

PARTIAL SOUTH ELEVATION

SCALE: 1/8" = 1'-0"

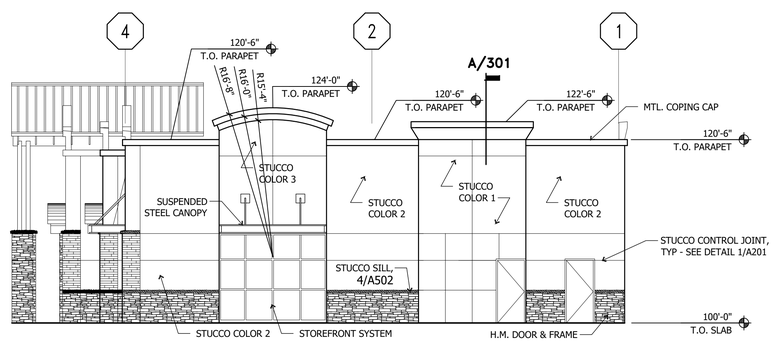

WEST ELEVATION

SCALE: 1/8" = 1'-0"

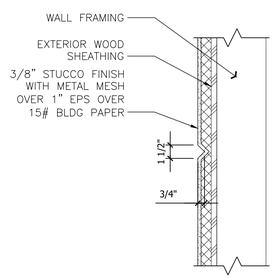

DETAIL 1

SCALE: 1 1/2" = 1'-0"

Drawn RGE
Checked RG
Reviewed RG
CAD File No. 16012-X-BASE-8-2-16

No. REVISIONS/SUBMISSIONS Date

Seal

7904 REGISTERED ARCHITECT STATE OF WASHINGTON

THE CONTRACTOR SHALL CHECK AND VERIFY ALL ASPECTS OF THE WORK AND REPORT ERRORS AND OR OMISSIONS TO THE ARCHITECT PRIOR TO COMMENCING WORK. ALL CONSTRUCTION SHALL CONFORM TO CODES AND ORDINANCES, LOCAL AND STATE LAWS, AND ALL ASPECTS AT THE TIME OF CONSTRUCTION. DRAWINGS ARE DIAGRAMMATIC IN NATURE, AND DO NOT PURPORT TO REPRESENT ALL ITEMS REQUIRED FOR COMPLETION OF THE WORK. DRAWINGS SHALL NOT BE SCALED.

Robert Gary Uhrich, AIA
architecture and planning
41 Morgan Road
P.O. Box 820
Ardenvoir, WA 98802
P. 509 ■ 763 ■ 8894
RGU architecture

CIVIL/STRUCTURAL ENGINEERING:
4TY ENGINEERING – SPOKANE WA
LANDSCAPE ARCHITECT
MTLA – LIBERTY LAKE WA
ELECTRICAL ENGINEERING
DEI ENGINEERING SPOKANE, WASHINGTON

KUNPENG LLC
RETAIL SHELL BUILDING
21801 E COUNTRY VISTA DR
LIBERTY LAKE WA

Drawing Title
EXTERIOR ELEVATIONS

Submittal CONSTRUCTION
Date 09/21/2016
Scale AS SHOWN
Project No.

Drawing No.
A201

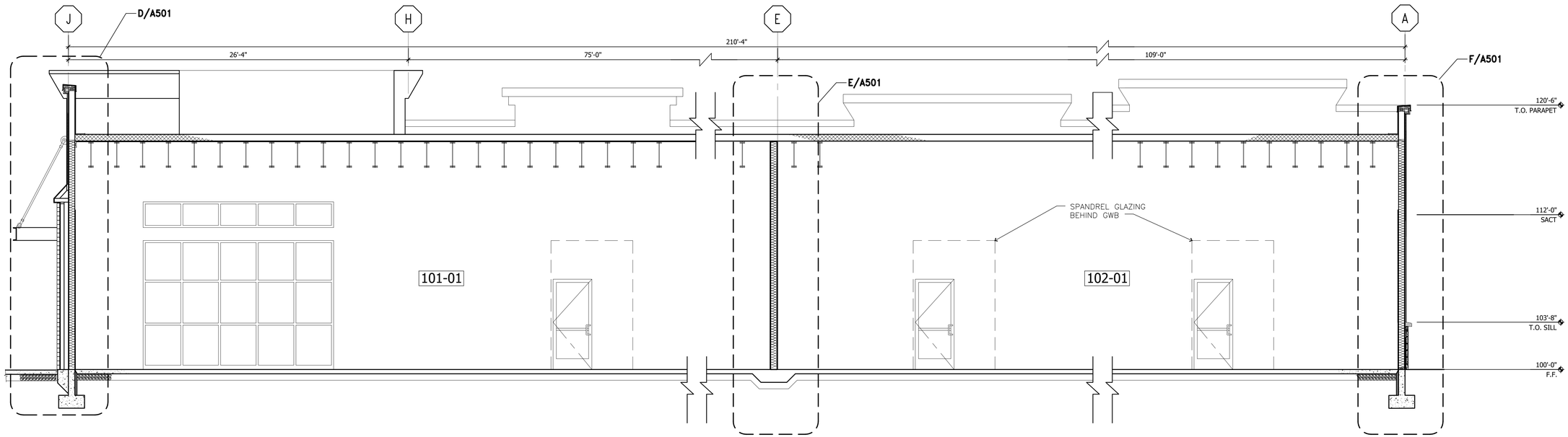

SECTION A

SCALE: 1/4" = 1'-0"

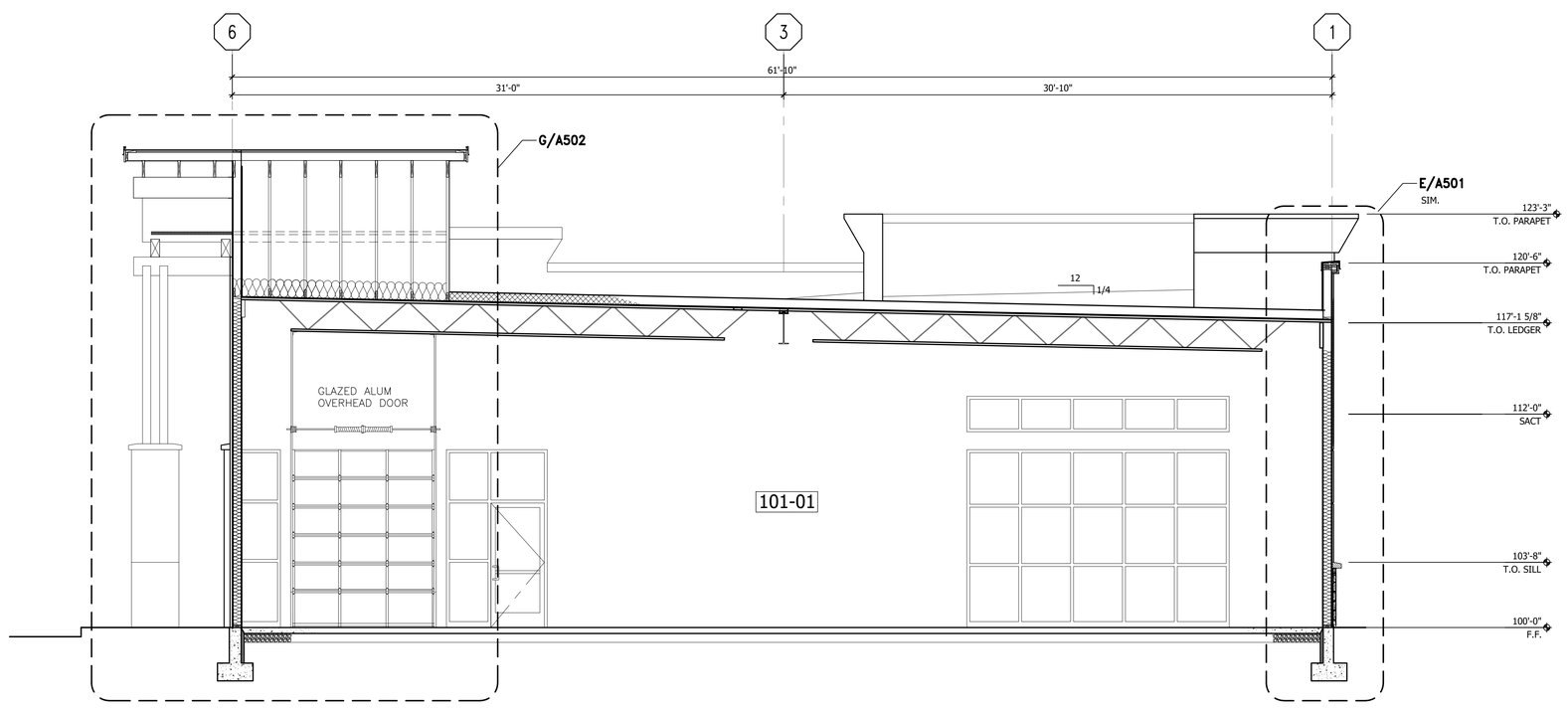

SECTION B

SCALE: 1/4" = 1'-0"

1. FOR NOTES AND LEGEND, SEE T101.

NOTES

Reviewed	RGU
CAD File No.	16.007-1.0-PSP-7-11-16
Drawn	RGF
Checked	RGU

No.	REVISIONS/SUBMISSIONS	Date

Seal

REGISTERED ARCHITECT 7904 STATE OF WASHINGTON

THE CONTRACTOR SHALL CHECK AND VERIFY ALL ASPECTS OF THE WORK AND REPORT ERRORS AND OR OMISSIONS TO THE ARCHITECT PRIOR TO COMMENCING WORK. ALL CONSTRUCTION SHALL CONFORM TO CODES AND ORDINANCES, LOCAL AND NATIONAL INSPECTORS AT THE TIME OF CONSTRUCTION. DRAWINGS ARE DIAGRAMMATIC IN NATURE, AND DO NOT PURPORT TO REPRESENT ALL ITEMS REQUIRED FOR COMPLETION OF THE WORK. DRAWINGS SHALL NOT BE SCALED.

Robert Gary Uhrich, AIA
architecture and planning
41 Morgan Road
P.O. Box 820 ■ ■
Ardenvoir, WA 98802
P. 509 ■ 763 ■ 8894

RGU architecture

CIVIL/STRUCTURAL ENGINEERING:
4TY ENGINEERING – SPOKANE WA
LANDSCAPE ARCHITECT
MTLA – LIBERTY LAKE WA
ELECTRICAL ENGINEERING
DEI ENGINEERING SPOKANE, WASHINGTON

KUNPENG LLC
RETAIL SHELL BUILDING
21801 E COUNTRY VISTA DR
LIBERTY LAKE WA

Drawing Title: BUILDING SECTIONS

Submittal: CONSTRUCTION
Date: 09/21/2016
Project No.
Scale: AS SHOWN

Drawing No.

A301

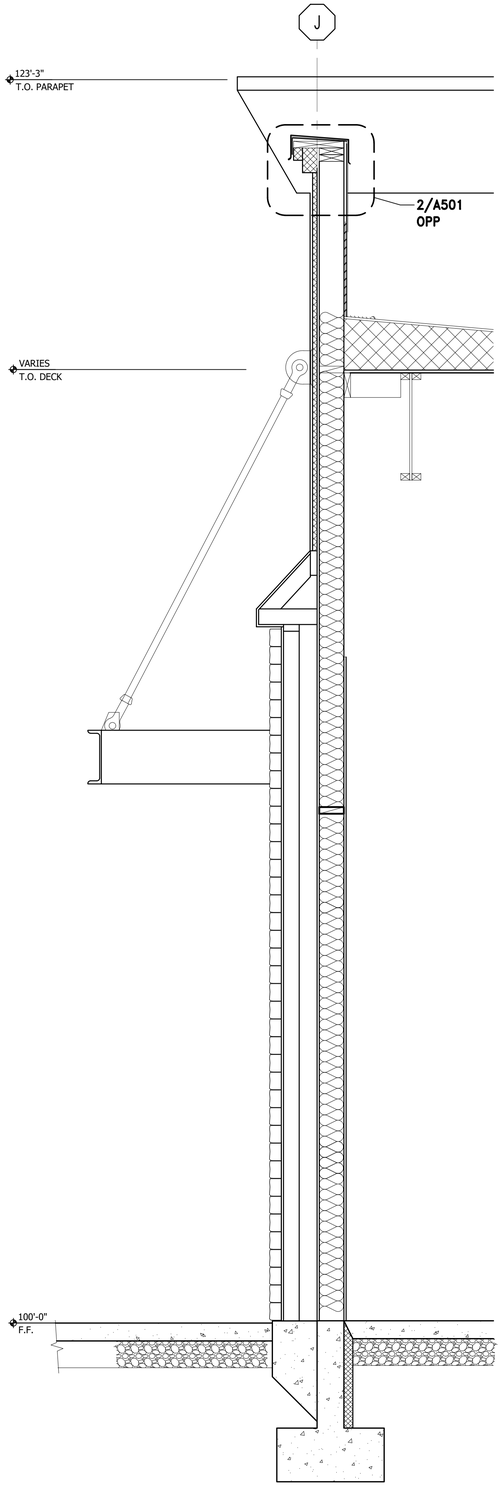

SECTION C SCALE: 3/4" = 1'-0"

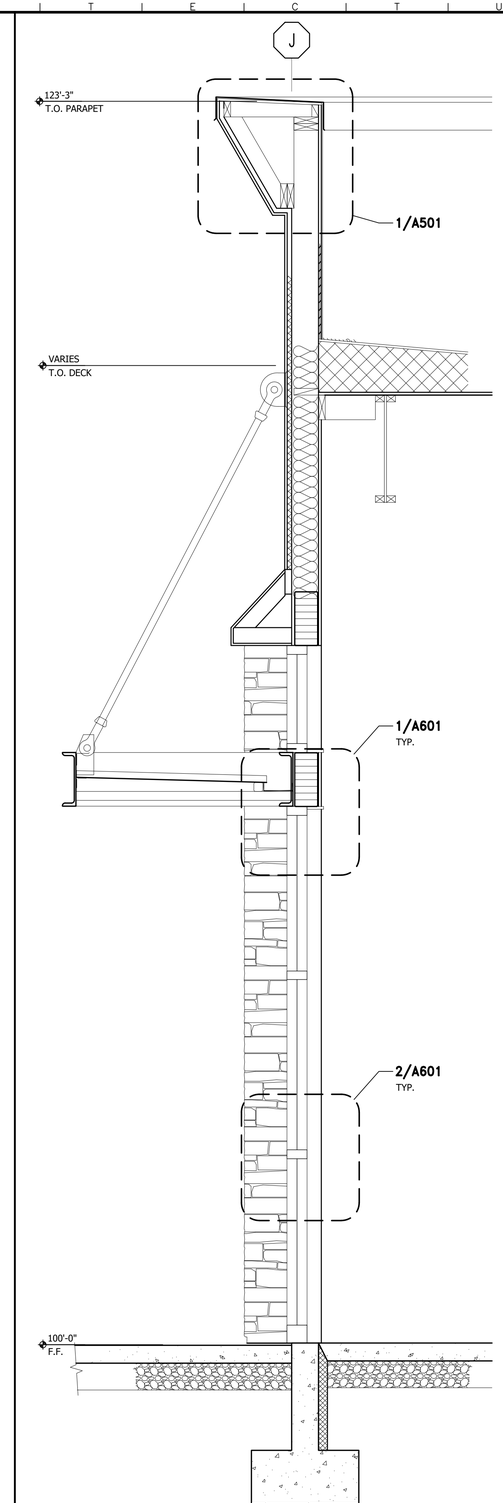

SECTION D SCALE: 3/4" = 1'-0"

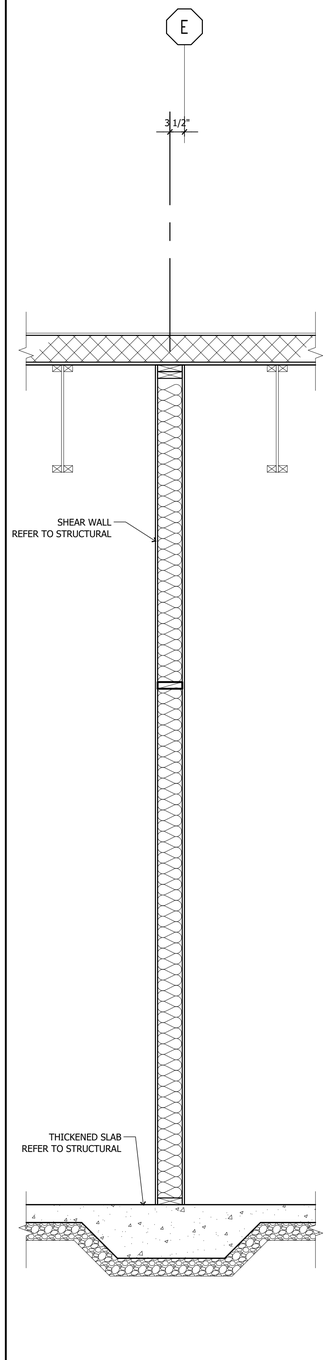

SECTION E SCALE: 3/4" = 1'-0"

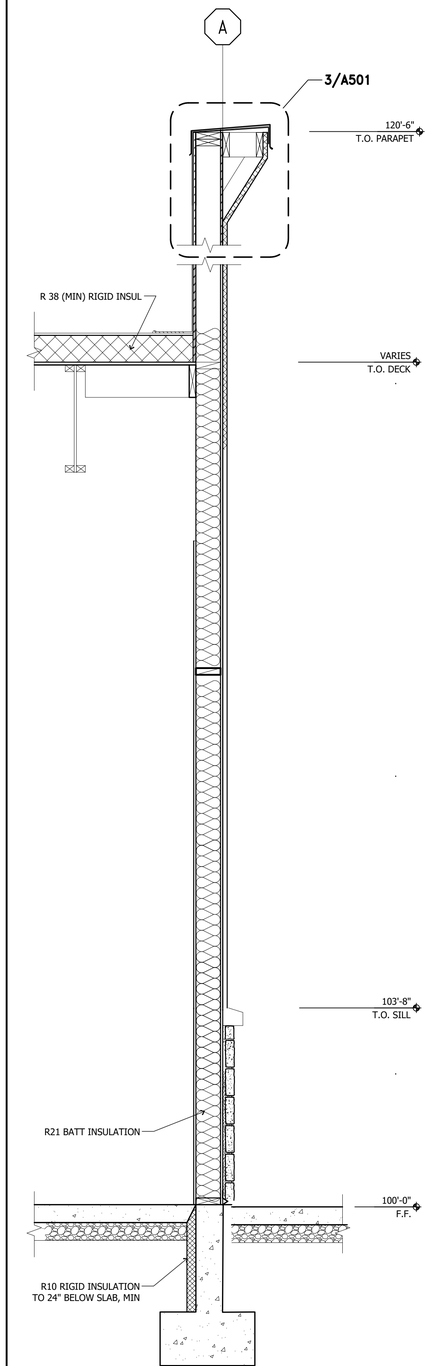

SECTION F SCALE: 3/4" = 1'-0"

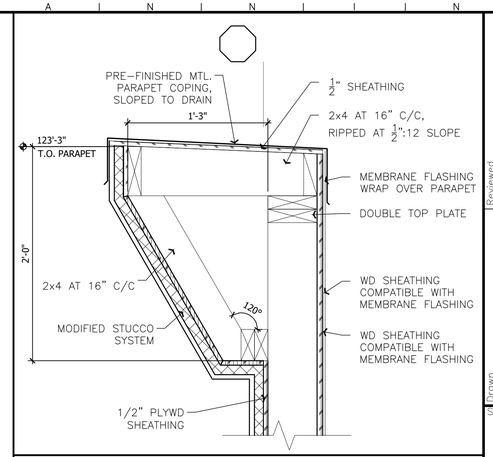

DETAIL 1 SCALE: 1 1/2" = 1'-0"

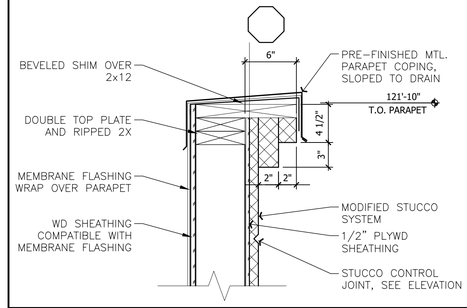

DETAIL 2 SCALE: 1 1/2" = 1'-0"

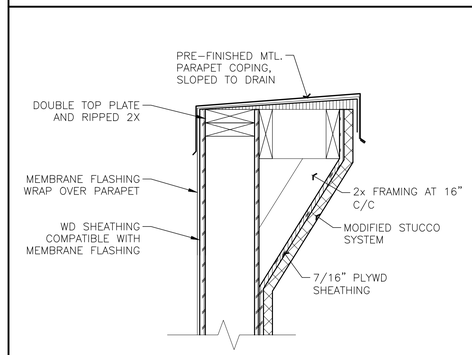

DETAIL 3 SCALE: 1 1/2" = 1'-0"

No.	REVISIONS/SUBMISSIONS	Date

Drawn RGF
Checked RGU
Reviewed RGU
CAD File No. 16.0071.0.0450-7-11-16

Seal

REGISTERED ARCHITECT
STATE OF WASHINGTON

THE CONTRACTOR SHALL CHECK AND VERIFY ALL ASPECTS OF THE WORK AND REPORT ERRORS AND OR OMISSIONS TO THE ARCHITECT PRIOR TO COMMENCING WORK. ALL CONSTRUCTION SHALL CONFORM TO CODES AND ORDINANCES, LOCAL AND NATIONAL INSPECTORS AT THE TIME OF CONSTRUCTION. DRAWINGS ARE DIAGRAMMATIC IN NATURE, AND DO NOT PURPORT TO REPRESENT ALL ITEMS REQUIRED FOR COMPLETION OF THE WORK. DRAWINGS SHALL NOT BE SCALED.

Robert Gary Uhrich, AIA
architecture and planning
41 Morgan Road
P.O. Box 820
Airway Heights, WA 99001
P. 509 ■ 789 ■ 8894

RGU architecture

CIVIL/STRUCTURAL ENGINEERING:
4TY ENGINEERING – SPOKANE WA
LANDSCAPE ARCHITECT
MTLA – LIBERTY LAKE WA
ELECTRICAL ENGINEERING
DEI ENGINEERING SPOKANE, WASHINGTON

KUNPENG LLC
RETAIL SHELL BUILDING
21801 E COUNTRY VISTA DR
LIBERTY LAKE WA

Drawing Title: SECTIONS AND DETAILS

Submittal: CONSTRUCTION
Project No.
Date: 09/21/2016
Scale: AS SHOWN

Drawing No.

A501

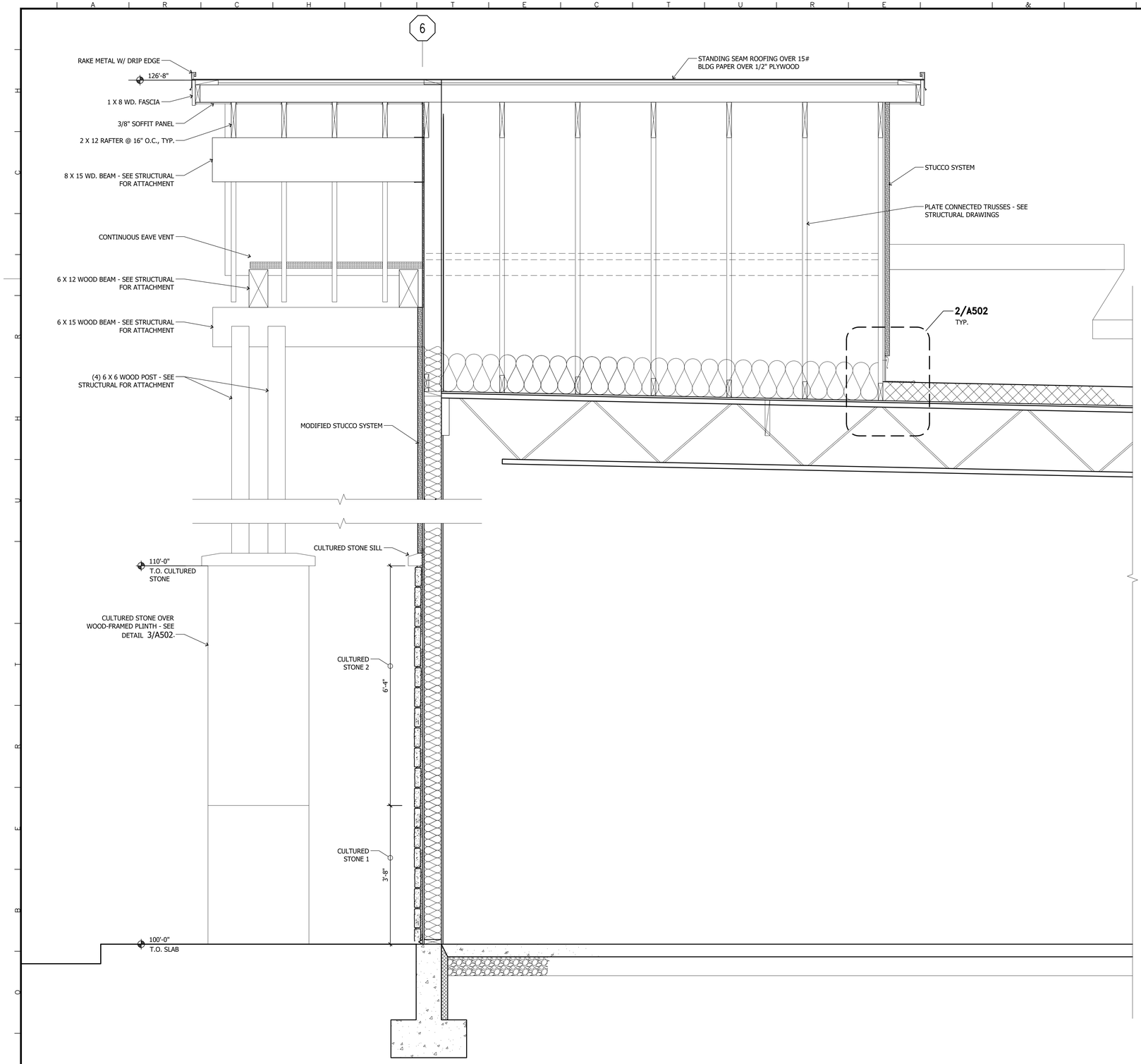

SECTION F

SCALE: 3/4" = 1'-0"

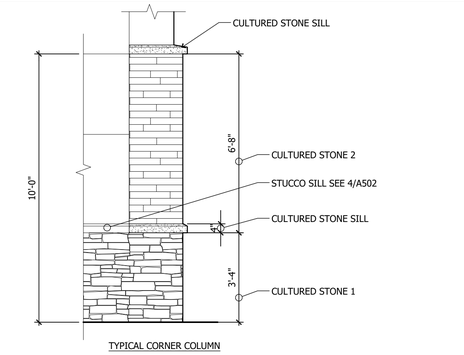

TYPICAL CORNER COLUMN

DETAIL 1

SCALE: 3/8" = 1'-0"

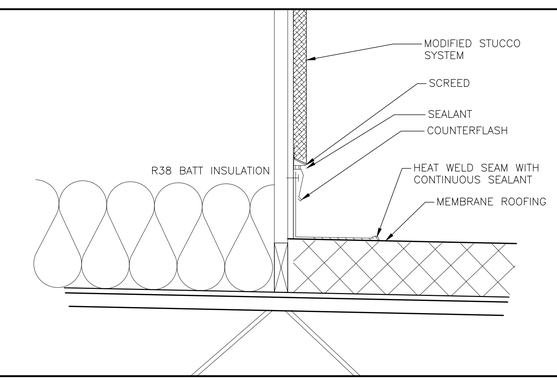

DETAIL 2

SCALE: 3/8" = 1'-0"

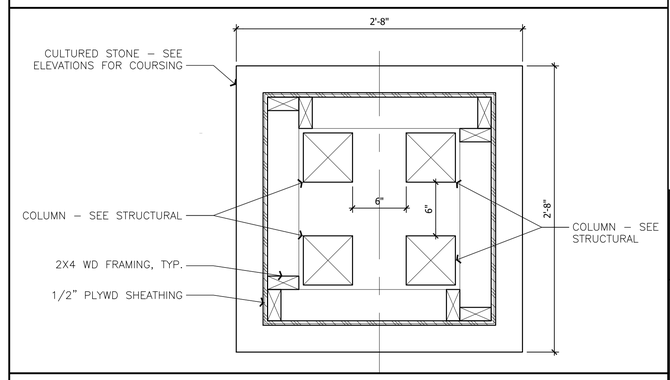

DETAIL 3

SCALE: 1 1/2" = 1'-0"

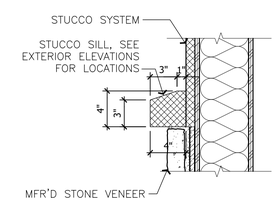

DETAIL 4

SCALE: 1 1/2" = 1'-0"

Reviewed RG
CAD File No. 16012-X-BASE-8-2-16
Drawn RGE
Checked RG

No.	REVISIONS/SUBMISSIONS	Date

Seal

7904 REGISTERED ARCHITECT ROBERT GARY UHRICH STATE OF WASHINGTON

THE CONTRACTOR SHALL CHECK AND VERIFY ALL ASPECTS OF THE WORK AND REPORT ERRORS AND OR OMISSIONS TO THE ARCHITECT PRIOR TO COMMENCING WORK. ALL CONSTRUCTION SHALL CONFORM TO CODES AND ORDINANCES, LOCAL AND NATIONAL INSPECTORS AT THE TIME OF CONSTRUCTION. DRAWINGS ARE DIAGRAMMATIC IN NATURE, AND DO NOT PURPORT TO REPRESENT ALL ITEMS REQUIRED FOR COMPLETION OF THE WORK. DRAWINGS SHALL NOT BE SCALED.

Robert Gary Uhrich, AIA
architecture and planning
41 Morgan Road
P.O. Box 820 ■■
Addy, Washington 99020
P 509 ■ 758 ■ 8894

RGU architecture

CIVIL/STRUCTURAL ENGINEERING:
4TY ENGINEERING – SPOKANE WA
LANDSCAPE ARCHITECT
M/TLA – LIBERTY LAKE WA
ELECTRICAL ENGINEERING
DEI ENGINEERING SPOKANE, WASHINGTON

KUNPENG LLC
RETAIL SHELL BUILDING
21801 E COUNTRY VISTA DR
LIBERTY LAKE WA

Drawing Title
SECTIONS AND DETAILS

Submittal CONSTRUCTION
Date 09/21/2016
Scale AS SHOWN
Project No.

Drawing No.
A502

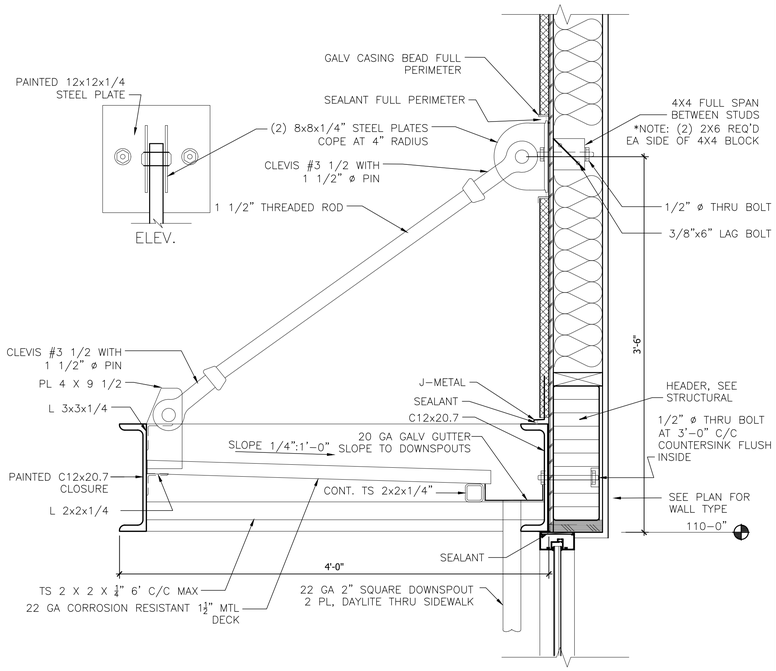

DETAIL 1

SCALE: 1 1/2" = 1'-0"

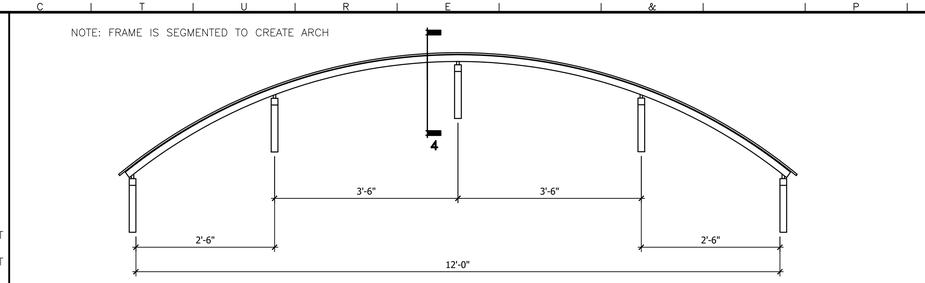

DETAIL 2

REF A201 - ARCH CANOPY

SCALE: 3/4" = 1'-0"

1. FOR NOTES AND LEGEND, SEE T101 & A101.

NOTES

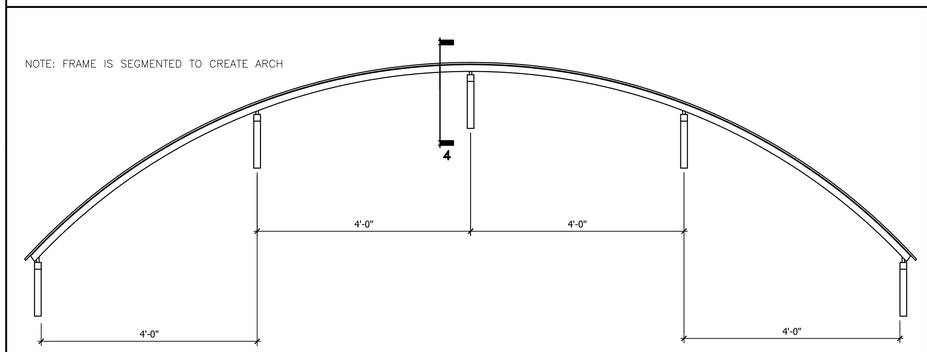

DETAIL 3

REF A201 - ARCH CANOPY

SCALE: 3/4" = 1'-0"

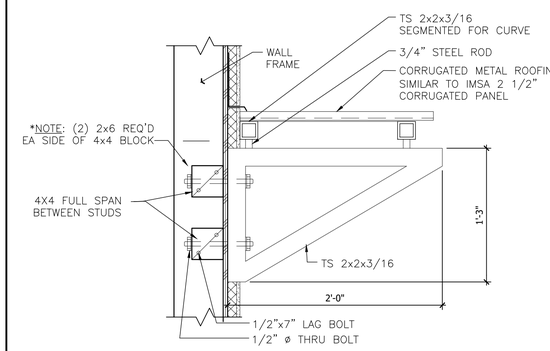

DETAIL 4

SCALE: 1 1/2" = 1'-0"

NOT USED

DETAIL 5

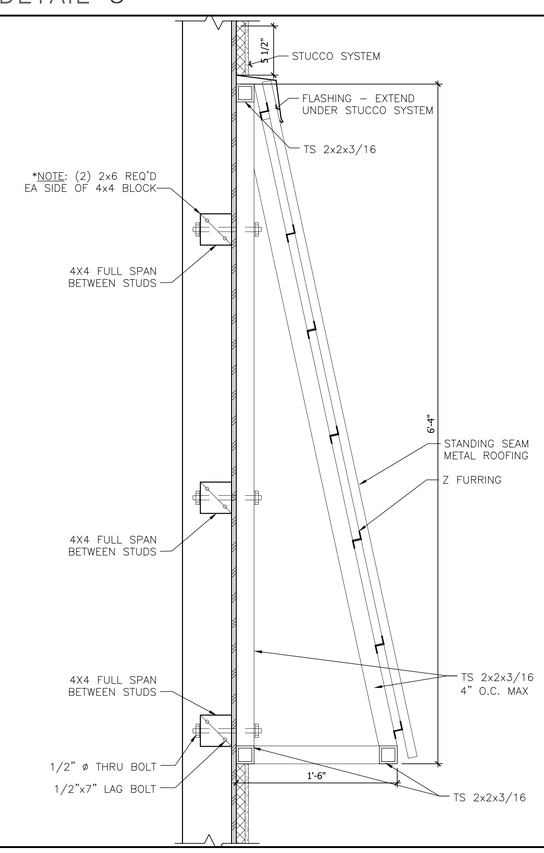

DETAIL 6

SCALE: 1 1/2" = 1'-0"

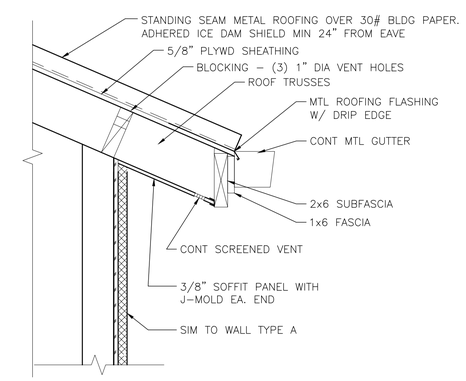

DETAIL 7

SCALE: 1 1/2" = 1'-0"

No.	REVISIONS/SUBMISSIONS	Date

Drawn RGE
Checked RG
Reviewed RG
CAD File No. 16012-X-BASE-8-2-16

Seal

REGISTERED ARCHITECT ROBERT GARY UHRICH STATE OF WASHINGTON 7904

THE CONTRACTOR SHALL CHECK AND VERIFY ALL ASPECTS OF THE WORK AND REPORT ERRORS AND OR OMISSIONS TO THE ARCHITECT PRIOR TO COMMENCING WORK. ALL CONSTRUCTION SHALL CONFORM TO CODES AND ORDINANCES, LOCAL AND NATIONAL, IN EFFECT AT THE TIME OF CONSTRUCTION. DRAWINGS ARE DIAGRAMMATIC IN NATURE, AND DO NOT PURPORT TO REPRESENT ALL ITEMS REQUIRED FOR COMPLETION OF THE WORK. DRAWINGS SHALL NOT BE SCALED.

Robert Gary Uhrich, AIA
architecture and planning
41 Morgan Road
P.O. Box 820 ■■
Airway Heights, WA 99001
P. 509 ■ 838 ■ 8802
F. 509 ■ 838 ■ 8894
RGU architecture

CIVIL/STRUCTURAL ENGINEERING:
4TY ENGINEERING - SPOKANE WA
LANDSCAPE ARCHITECT
MTLA - LIBERTY LAKE WA
ELECTRICAL ENGINEERING
DEI ENGINEERING SPOKANE, WASHINGTON

KUNPENG LLC
RETAIL SHELL BUILDING
21801 E COUNTRY VISTA DR
LIBERTY LAKE WA

Drawing Title
EXTERIOR ELEVATIONS

Submittal CONSTRUCTION
Project No.
Date 09/21/2016
Scale AS SHOWN

Drawing No.
A503

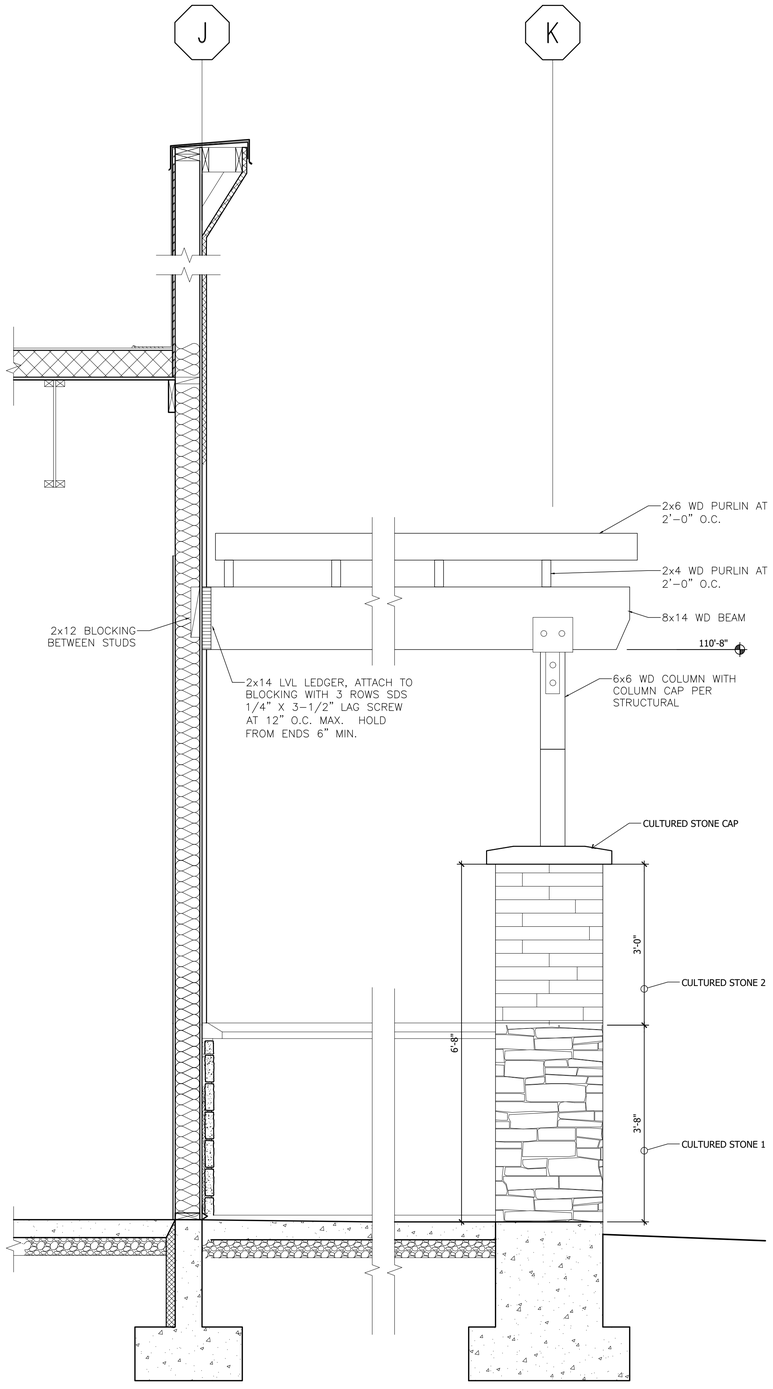

DETAIL 1 SCALE: 3/4" = 1'-0"

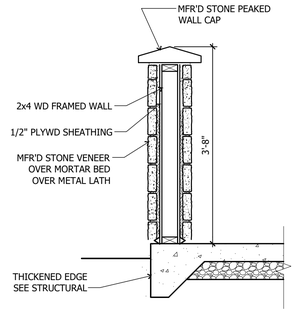

DETAIL 2 SCALE: 3/4" = 1'-0"

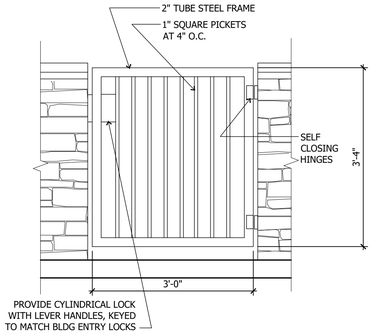

DETAIL 3 SCALE: 3/4" = 1'-0"

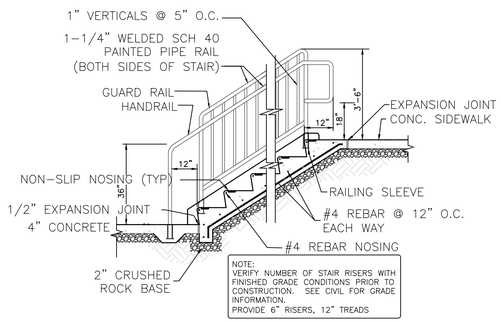

DETAIL 4 SCALE: 3/8" = 1'-0"

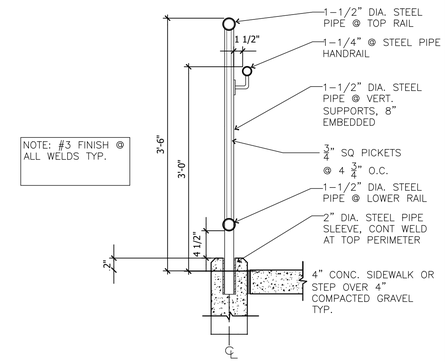

DETAIL 5 SCALE: 1" = 1'-0"

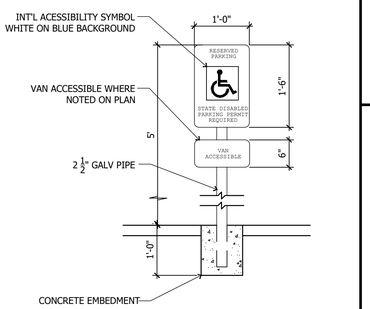

DETAIL 12 NTS

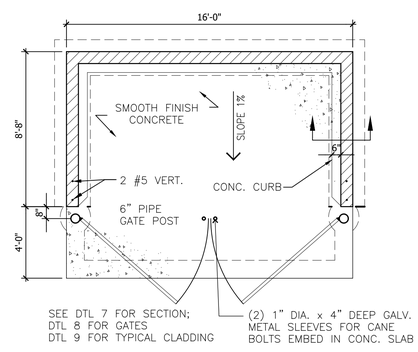

DETAIL 6 SCALE: 1/4" = 1'-0"

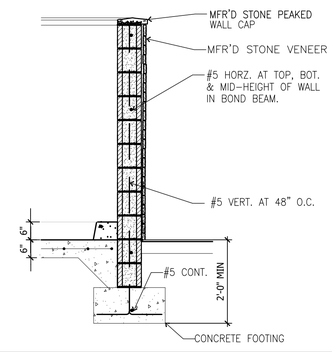

DETAIL 7 SCALE: 1/2" = 1'-0"

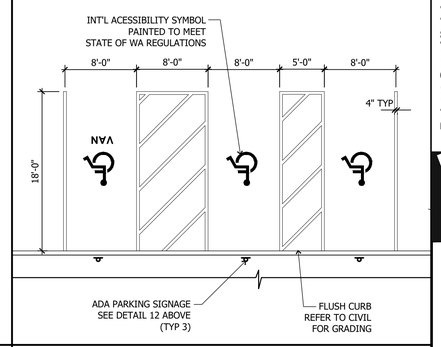

DETAIL 11 NTS

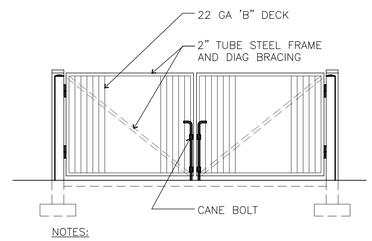

NOTES:

1. ALL CONC. BLOCK MORTAR JOINTS SHALL BE FLUSH & SMOOTH AT INSIDE FACE.
2. SEE SITE PLAN FOR LOCATION OF TRASH ENCLOSURE.

DETAIL 8 SCALE: 1/4" = 1'-0"

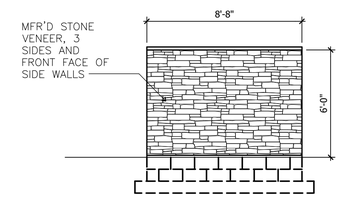

DETAIL 9 SCALE: 1/4" = 1'-0"

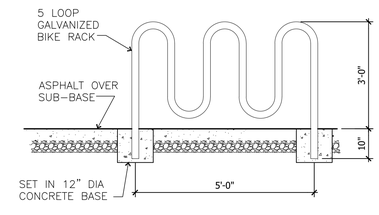

DETAIL 10 SCALE: 1/2" = 1'-0"

Drawn RGE
Checked RG
Reviewed RG
CAD File No. 16012-X-BASE-8-2-16

No.	REVISIONS/SUBMISSIONS	Date

Seal

REGISTERED ARCHITECT 7904 ROBERT GARY UHRICH STATE OF WASHINGTON

THE CONTRACTOR SHALL CHECK AND VERIFY ALL ASPECTS OF THE WORK AND REPORT ANY ERRORS OR OMISSIONS TO THE ARCHITECT PRIOR TO COMMENCING WORK. ALL CONSTRUCTION SHALL CONFORM TO CODES AND ORDINANCES, LOCAL AND STATE REGULATIONS AT THE TIME OF CONSTRUCTION. DRAWINGS ARE DIAGRAMMATIC IN NATURE, AND DO NOT PURPORT TO REPRESENT ALL ITEMS REQUIRED FOR COMPLETION OF THE WORK. DRAWINGS SHALL NOT BE SCALED.

Robert Gary Uhrich, AIA
architecture and planning
41 Morgan Road
P.O. Box 820
Ardenvoir, WA 98810
P. 509 • 763 • 9894
RGU architecture
CIVIL/STRUCTURAL ENGINEERING:
4TY ENGINEERING – SPOKANE WA
LANDSCAPE ARCHITECT
MTLA – LIBERTY LAKE WA
ELECTRICAL ENGINEERING
DEI ENGINEERING SPOKANE, WASHINGTON

KUNPENG LLC
RETAIL SHELL BUILDING
21801 E COUNTRY VISTA DR
LIBERTY LAKE WA

Drawing Title: DETAILS

Date 09/21/2016
Scale AS SHOWN
Submittal CONSTRUCTION
Project No.

Drawing No.

A504

DOOR SCHEDULE

SHEET NUM.	DOOR NUM.	NUM. OF DRS	DOOR OPENING W	DOOR OPENING H	DOOR OPENING T	DOOR TYPE	DOOR MAT'L	DOOR FINISH	DOOR LOUVER	DOOR GLASS	LABEL	FRAME TYPE	FRAME MAT'L	FRAME FINISH	HARDWARE GROUP
A101	104.1	2	3'-0	7'-0	1-3/4"	B	ALUM	ANDZ	–	–	–	F	ALUM	ANDZ	PANIC HW
A101	104.2	2	3'-0	10'-0	1-3/4"	B	ALUM	ANDZ	–	–	–	F	ALUM	ANDZ	PANIC HW
A101	104.3	2	3'-0	7'-0	1-3/4"	B	ALUM	ANDZ	–	–	–	F	ALUM	ANDZ	PANIC HW
A101	104.4	2	3'-0	7'-0	1-3/4"	B	ALUM	ANDZ	–	–	–	F	ALUM	ANDZ	PANIC HW
A101	104.5	1	3'-0	7'-0	1-3/4"	A	HM	PAINT	–	–	–	1	HM	ANDZ	1
A101	104.6	1	3'-0	7'-0	1-3/4"	A	HM	PAINT	–	–	–	1	HM	ANDZ	1
A101	104.7	1	3'-0	7'-0	1-3/4"	B	ALUM	ANDZ	–	–	–	C	ALUM	ANDZ	PANIC HW
A101	104.8	1	3'-0	7'-0	1-3/4"	B	ALUM	ANDZ	–	–	–	C	ALUM	ANDZ	PANIC HW
A101	104.9	1	3'-0	7'-0	1-3/4"	B	ALUM	ANDZ	–	–	–	C	ALUM	ANDZ	PANIC HW
A101	104.10	1	3'-0	7'-0	1-3/4"	B	ALUM	ANDZ	–	–	–	C	ALUM	ANDZ	PANIC HW
A101	105.1	2	3'-0	7'-0	1-3/4"	B	ALUM	ANDZ	–	–	–	G	ALUM	ANDZ	PANIC HW
A101	105.2	1	3'-0	7'-0	1-3/4"	B	ALUM	ANDZ	–	–	–	C	ALUM	ANDZ	PANIC HW
A101	105.3	1	3'-0	7'-0	1-3/4"	B	ALUM	ANDZ	–	–	–	C	ALUM	ANDZ	PANIC HW
A101	105.4	1	3'-0	7'-0	1-3/4"	A	HM	PAINT	–	–	–	C	HM	PAINT	PANIC HW
A101	105.5	1	8'-0	10'-0	1-3/4"	C	HM	PAINT	–	–	–	MFR	HM	PAINT	MANUF.

DOOR TYPES

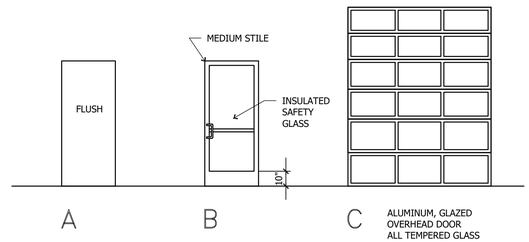

HARDWARE GROUP 1
MEDIUM DUTY MORTISE LEVER LOCKSET WITH DEADBOLT, KEYED OUTSIDE ENTRY
1 ½ PAIR BALL BEARING HINGES
CLOSER, 180° SWING
KICK STOP
GASKETING
THRESHOLD
ALL HARDWARE DARK BRONZE

WINDOW TYPES

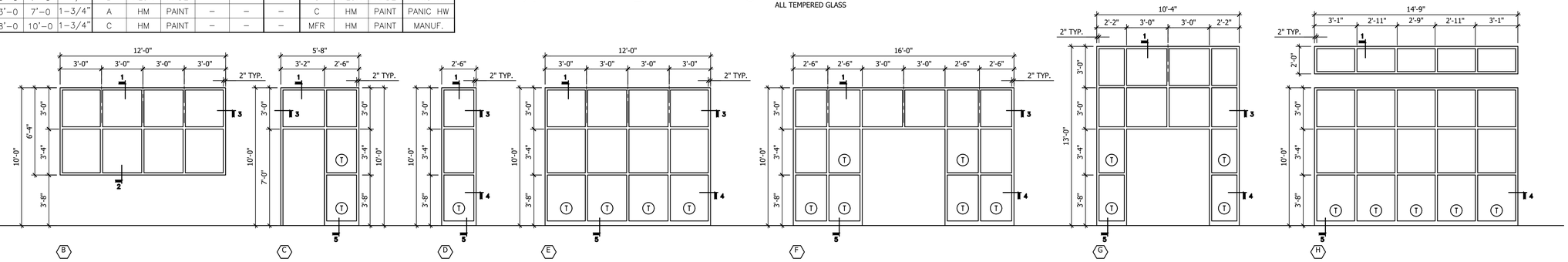

DETAIL 1

SCALE: 3" = 1'-0"

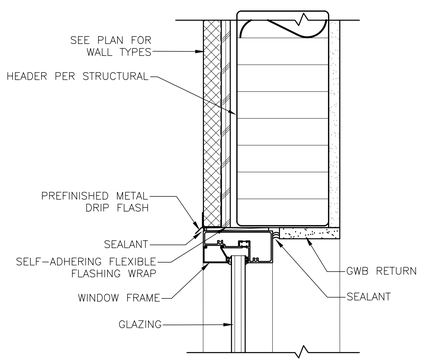

DETAIL 3

SCALE: 3" = 1'-0"

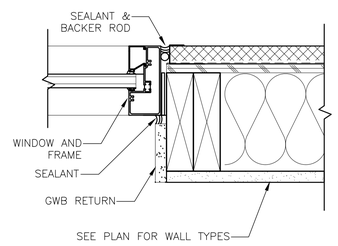

DETAIL 5

SCALE: 3" = 1'-0"

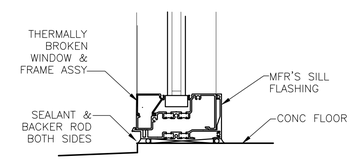

DETAIL 2

SCALE: 3" = 1'-0"

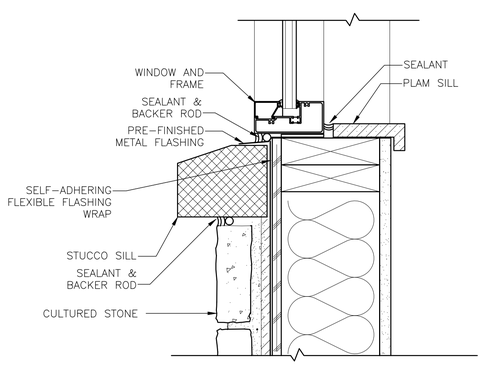

DETAIL 4

SCALE: 3" = 1'-0"

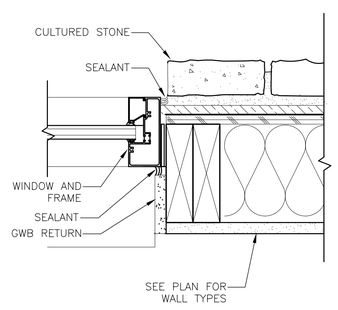

DETAIL 6

SCALE: 1 1/2" = 1'-0"

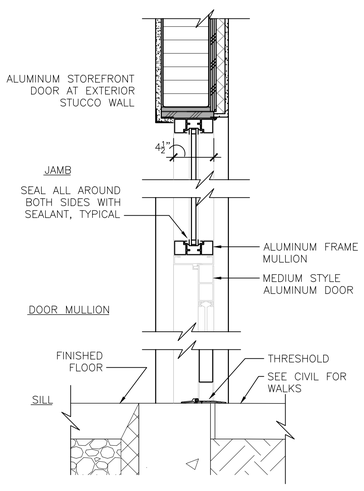

1. FOR NOTES AND LEGEND, SEE T101.
2. DOOR AND FRAME FINISH COLORS SHALL BE DETERMINED BY THE OWNER. CONTRACTOR SHALL SUBMIT SAMPLES FOR APPROVAL.
3. ALL HARDWARE IS DESIGN–BUILD, COORDINATE REQUIREMENTS WITH OWNER. ALL HARDWARE SHALL HAVE ALL OPERABLE PARTS OF A SHAPE THAT IS EASY TO GRASP WITH ONE HAND AND DOES NOT REQUIRE TIGHT GRASPING, PINCHING, OR TWISTING OF THE WRIST TO OPERATE AS PER ICC/ANSI 117.1.

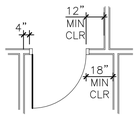

- EXTERIOR WINDOW FRAMES BASIS OF DESIGN IS KAWNEER TRIFAB VG 451T, CENTER GLAZED. DARK BRONZE ANODIZED FINISH.
- ALL EXTERIOR GLAZING IS 1" INSULATED, ARGON FILLED WITH CLEAR GLASS OUTER PANE 1/4", LOW–E #2 SURFACE, CLEAR FLOAT GLASS INNER LITE. U–FACTOR 0.30, SHGC 0.33, SHADING COEFFICIENT 0.39

ALL WINDOWS AND ENTRANCES SHALL BE LABLED WITH U FACTOR, SHGC, VT, AND LEAKAGE RATINIG

(T) = TEMPERED GLASS

NOTES

Reviewed ETB
CAD File No. 16012-X-BASE-8-2-16
Drawn RGE
Checked RG
No. REVISIONS/SUBMISSIONS Date

Seal

THE CONTRACTOR SHALL CHECK AND VERIFY ALL ASPECTS OF THE WORK AND REPORT ERRORS AND OR OMISSIONS TO THE ARCHITECT PRIOR TO COMMENCING WORK. ALL CONSTRUCTION SHALL CONFORM TO CODES AND ORDINANCES, LOCAL AND NATIONAL AS ADOPTED AT THE TIME OF CONSTRUCTION. DRAWINGS ARE DIAGRAMMATIC IN NATURE, AND DO NOT PURPORT TO REPRESENT ALL ITEMS REQUIRED FOR COMPLETION OF THE WORK. DRAWINGS SHALL NOT BE SCALED.

Robert Gary Uhrich, AIA
architecture and planning
41 Morgan Road
P.O. Box 820
Liberty Lake, WA 99019
P. 509.924.9900 F. 509.924.9904
RGU architecture
CIVIL/STRUCTURAL ENGINEERING: 4TY ENGINEERING – SPOKANE WA
LANDSCAPE ARCHITECT MTLA – LIBERTY LAKE WA
ELECTRICAL ENGINEERING DEI ENGINEERING SPOKANE, WASHINGTON

KUNPENG LLC
RETAIL SHELL BUILDING
21801 E COUNTRY VISTA DR
LIBERTY LAKE WA

Drawing Title: EXTERIOR ELEVATIONS

Submittal: CONSTRUCTION
Date: 09/21/2016
Project No.
Scale: AS SHOWN

Drawing No.

A601

STRUCTURAL - GENERAL NOTES

GENERAL REQUIREMENTS

GOVERNING CODE: The design and construction of this project is governed by the International Building Code, 2012 Edition, hereafter referred to as the IBC, as adopted and modified by the Liberty Lake, WA understood to be the Authority Having Jurisdiction (AHJ).

REFERENCE STANDARDS: Refer to Chapter 35 of 2012 IBC. Where other Standards are noted in the drawings, use the latest edition of the standard unless a specific date is indicated. Reference to a specific section in a code does not relieve the contractor from compliance with the entire standard.

DEFINITIONS: The following definitions cover the meanings of certain terms used in these notes:

"Architect/Engineer" - The Architect of Record and the Structural Engineer of Record.

- "Structural Engineer of Record" (SER) - The structural engineer who is licensed to stamp & sign the structural documents for the project. The SER is responsible for the design of the Primary Structural System.
- "Submit for review" - Submit to the Architect/Engineer for review prior to fabrication or construction.
- "Per Plan" - Indicates references to the structural plans, elevations and structural general notes.

SPECIFICATIONS: Refer to the project specifications issued as part of the contract documents for information supplemental to these drawings.

OTHER DRAWINGS: Refer to the architectural, mechanical, electrical, civil and plumbing drawings for additional information including but not limited to: dimensions, elevations, slopes, door and window openings, non-bearing walls, stairs, finishes, drains, waterproofing, railings, mechanical unit locations, and other nonstructural items.

STRUCTURAL DETAILS: The structural drawings are intended to show the general character and extent of the project and are not intended to show all details of the work. Use details marked "typical" wherever they apply.

STRUCTURAL RESPONSIBILITIES: The structural engineer (SER) is responsible for the strength and stability of the primary structure in its completed form.

COORDINATION: The Contractor is responsible for coordinating details and accuracy of the work; for confirming and correlating all quantities and dimensions; for selecting fabrication processes; for techniques of assembly; and for performing work in a safe and secure manner.

MEANS, METHODS and SAFETY REQUIREMENTS: The contractor is responsible for the means and methods of construction and all job related safety standards such as OSHA and DOSH (Department of Occupational Safety and Health).

BRACING/SHORING DESIGN ENGINEER: The contractor shall at his discretion employ an SSE, a registered professional engineer for the design of any temporary bracing and shoring.

TEMPORARY SHORING, BRACING: The contractor is responsible for the strength and stability of the structure during construction and shall provide temporary shoring, bracing and other elements required to maintain stability until the structure is complete. It is the contractor's responsibility to be familiar with the work required in the construction documents and the requirements for executing it properly.

CONSTRUCTION LOADS: Loads on the structure during construction shall not exceed the design loads as noted in DESIGN CRITERIA & LOADS below or the capacity of partially completed construction as determined by the Contractor's SSE for Bracing/Shoring.

CHANGES IN LOADING: The contractor has the responsibility to notify the SER of any architectural, mechanical, electrical, or plumbing load imposed onto the structure that differs from, or that is not documented on the original Contract Documents (architectural / structural / mechanical / electrical or plumbing drawings). Provide documentation of location, load, size and anchorage of all undocumented loads in excess of 400 pounds. Provide marked-up structural plan indicating locations of any new equipment or loads. Submit plans to the Architect/Engineer for review prior to installation.

NOTE PRIORITIES: Plan and detail notes and specific loading data provided on individual plans and detail drawings supplements information in the Structural General Notes.

DISCREPANCIES: In case of discrepancies between the General Notes, Specifications Plan/details or Reference Standards, the Architect/Engineer shall determine which shall govern. Discrepancies shall be brought to the attention of the Architect/Engineer before proceeding with the work. Should any discrepancy be found in the Contract Documents, the Contractor will be deemed to have included in the price the most expensive way of completing the work, unless prior to the submission of the price, the Contractor asks for a decision from the Architect as to which shall govern. Accordingly, any conflict in or between the Contract Documents shall not be a basis for adjustment in the Contract Price.

SITE VERIFICATION: The contractor shall verify all dimensions and conditions at the site. Conflicts between the drawings and actual site conditions shall be brought to the attention of the Architect/Engineer before proceeding with the work.

ADJACENT UTILITIES: The contractor shall determine the location of all adjacent underground utilities prior to earthwork, foundations, shoring, and excavation. Any utility information shown on the drawings and details is approximate and not necessarily complete.

ALTERNATES: Alternate products of similar strength, nature and form for specified items may be submitted with adequate technical documentation to the Architect/Engineer for review. Alternate materials that are submitted without adequate technical documentation or that significantly deviate from the design intent of materials specified may be returned without review. Alternates that require substantial effort to review will not be reviewed unless authorized by the Owner.

DESIGN CRITERIA AND LOADS

OCCUPANCY:	Occupancy Category of Building per 2009 IBC Table 1604.5 =	II

WIND DESIGN:	MAIN WIND FORCE RESISTING SYSTEM		
	Basic Wind Speed	MPH	85
	Exposure Category		B
	Wind Importance	I_w =	1.0
	Internal Pressure Coefficient	Cpi =	+/- 0.18
	Topographic Factor	Kzt =	1.0
	Wind Analysis procedure used:		Method 1 - Simplified
	COMPONENT & CLADDING PRESSURES for DESIGN		PSF
	Wall Cladding, Typical Zone		13, -14.1
	Wall Cladding, Edge Zone within 7 feet of corners		13, -17.4
	Roof Cladding, Middle Zone		13
	Roof Cladding, Edge Zone within 7 feet of edge		22
	Roof Cladding, Corner Zone within 7 feet of corners		32
	Uplift Load [Net]		15

SEISMIC DESIGN:	Seismic Design Category:	SDC =	C
	Basic Structural System		Bearing Wall, Building Frame,
	Seismic Force Resisting System		Wood Shear Walls
	Response Modification Factor:	R =	6.5 wood
	System Over strength Factor	Omega =	3
	Deflection Amplification Factor	Cd =	4
	Site Classification per IBC Table 1613.5.2	Site Class =	D
	Seismic Importance Factor per ASCE 7-05 Table 11.5-1	Ie =	1.0
	Spectral Response Acceleration (Short Period)	S_s =	0.4047
	Spectral Response Acceleration (1-Second Period)	S_1 =	0.1138
	Spectral Design Response Coefficient (Short Period)	S_{DS} =	0.398
	Spectral Design Response Coefficient (1-Second Period)	S_{D1} =	0.178
	Seismic response coefficient(s)	Cs =	0.0613
	Redundancy Factor (North/South Direction)	N/S rho=	1.0
	Redundancy Factor (East / West Direction)	E/W rho=	1.0
	Design Base Shear (North/South Direction)	KIPS	26.9 ASD Wood
	Design Base Shear (East / West Direction)	KIPS	10.8 ASD Wood
	Base shear governed by:		Wind (transverse), EQ (longitudinal)
	Seismic Analysis procedure used:		Equivalent Lateral Force (ELF)

SNOW LOAD: (1)	Flat Roof Snow Load, (PSF)	p_f =	40 (3)
	Snow Drift Loading required by Authority Having Jurisdiction?		Yes
	Snow Load Importance Factor	I_s =	1.0 (3)
	Ground Snow Load, (PSF)	p_g =	40
	Snow Exposure Factor	C_e =	B
	Thermal Factor	C_t =	1.0
	See Roof Plan for Drift Loading		

1) Snow Load is un-reducible.
2) Snow Load based on ASCE Fig 7-1.
3) Snow Load Importance Factor per ASCE 7-05 Table 7-4.

DESIGN LIVE LOADS	AREA	LIVE LOADS (PSF) UNO	REMARKS & FOOTNOTES
	Roof Live	20	

DESIGN DEAD LOADS	BIDDER DESIGN	DEAD LOADS (PSF) UNO		REMARKS & FOOTNOTES
	Roof Dead Load, Total	15	PSF	For Pre-Fabricated Wood Roof Truss design
	Top Chord	10	PSF	
	Bottom Chord	5	PSF	

SUBMITTALS

SUBMIT FOR REVIEW: SUBMITTALS of shop drawings are required for items noted in the individual materials sections and for bidder designed elements.

SUBMITTAL REVIEW PERIOD: Submittals shall be made in time to provide a minimum of TWO WEEKS for review by the Architect/Engineer prior to the onset of fabrication.

GENERAL CONTRACTOR'S PRIOR REVIEW: Prior to submission to the Architect/Engineer, the Contractor shall review the submittal for completeness. Dimensions and quantities are not reviewed by the SER, and therefore, must be verified by the General Contractor. Contractor shall provide any necessary dimensional details requested by the Detailer and provide the Contractor's review stamp and signature before forwarding to the Architect/Engineer.

SHOP DRAWING REVIEW: Once the contractor has completed his review, the SER will review the submittal for general conformance with the design concept and the contract documents of the building and will stamp the submittal accordingly. Markings or comments shall not be construed as relieving the contractor from compliance with the project plans and specifications, nor departures there from.

SHOP DRAWING DEVIATIONS: When shop drawings (component design drawings) differ from or add to the requirements of the structural drawings they shall be designed and stamped by the responsible SSE.

DEFERRED SUBMITTALS

BIDDER-DESIGNED ELEMENTS
Submit "Bidder-Designed" deferred submittals to the Architect and SER for review prior to submission to the city for approval.

Design of prefabricated, "bidder designed", manufactured, pre-engineered, or other fabricated products shall be comply with the following requirements:

1) Design considers tributary dead, live, wind and earthquake loads in combinations required by IBC.
2) Design within the Deflection Limits noted herein and as specified or referenced in 2009 IBC.
3) Design shall conform to the specifications and reference standards of the governing code.
4) Submittal shall include:
   a. Calculations prepared, stamped and signed by the SSE demonstrating code conformance.
   b. Engineered component design drawings are prepared, stamped and signed by the SSE.
   c. Product data, technical information and manufacturer's written requirements and Agency approvals as applicable.
   d. SSE may submit to the Architect/Engineer, a request to utilize relevant alternate design criteria of similar nature and generally equivalency which is recognized by the Code and acceptable to the Authority Having Jurisdiction. Submit adequate documentation of design.

DEFLECTION LIMITS:	VERTICAL	LIMIT
	Roof Members, Dead + Live or Snow or Wind, Total Load (TL) Deflection	L / 240, where (L is span length,inches)
	Roof, Live or Snow or Wind Load (RLL)	L / 360
	Floor Members, Total Load (TL) uno	L / 240
	Floor Live Load (LL) uno	L / 360
	HORIZONTAL	LIMIT and FOOTNOTE
	Members Supporting Brittle Finishes	L / 240 (1)
	Members Supporting Flexible Finishes	L / 180 (1)

(1) Wind Load is reducible to 0.7 times the Component and Cladding Loads per Table 1604.3 footnote f.

GENERAL CONTRACTOR'S PRIOR REVIEW: Once the contractor has completed his review of the SSE component drawings, the SER will review the submittal for general conformance with the design of the building and will stamp the submittal accordingly. Review of the Specialty Structural Engineer's (SSE) shop drawings (component design drawings) is for compliance with design criteria and compatibility with the design of the primary structure and does not relieve the SSE of responsibility for that design. All necessary bracing, ties, anchorage, proprietary products shall be furnished and installed per manufacturer's instructions or the SSE's design drawings and calculations. These elements include but are not limited to:

- Mechanical, Electrical, Plumbing & Sprinkler Hanger Plans
- Temporary Shoring Systems
- Prefabricated Wood Roof Trusses
- Engineered Wood Products, (PSL, LSL, LVL)
- Pre-fabricated wood shear & bearing wall panels
- Open Web Wood Joists

TESTS AND INSPECTIONS

INSPECTIONS: Special Inspections and Testing shall be done in accordance the STATEMENT OF SPECIAL INSPECTIONS per IBC Sections 1704, 1705, as applicable. Foundations, footings, under slab systems and framing are subject to inspection by the Building Official in accordance with IBC 110.3. Contractor shall coordinate all required inspections with the Building Official.

SPECIAL INSPECTORS: Special Inspectors shall be employed by the Owner, to provide Special Inspections for the project. Special Inspectors shall be qualified persons who are registered with an Approved Agency.

STATEMENT OF SPECIAL INSPECTIONS per 1704 and 1705. Special Inspections and Testing are required by 1704, 1706, 1707 and 1708 for the following:

FABRICATION SHOP INSPECTION: Where off-site Fabrication of gravity LOAD BEARING MEMBERS & ASSEMBLIES is performed, Special Inspector shall verify that the fabricator complies with IBC 1704.2

SOILS & FOUNDATION CONSTRUCTION

per IBC Section 1704.7

- Periodic inspection of soils earthwork per Table 1704.7 is required for:
  - Footing soil bearing surfaces prior to placing any reinforcing steel
  - Excavation depth and bearing layer prior to placing any reinforcing steel.
  - Compacted fill material classification.
  - Subgrade preparation prior to filling.

CONCRETE CONSTRUCTION per IBC Section 1704.4 and Table 1704.4 including:

- Periodic inspection required for:
  - Size & placement of all reinforcing steel prior to the pour.
  - Placement clearances around reinforcing steel at embedded conduit.
  - Shape, location & dimensions of members formed.
  - Use of the required design concrete mix.
  - Maintenance of specified curing temperature and techniques.
  - Verification of in-situ concrete strength prior to removal of shores and forms from beams and structural slabs.
- Continuous inspection required during the:
  - Placing of reinforced concrete for proper application techniques.
  - Placing & size of cast-in-place bolts and embedded fabrications prior to the pour.
  - Placing of concrete around cast-in-place bolts and embeds.
  - Sampling of fresh concrete.
  - Determinations of slump, air content and temperature.
  - Grouting operation of post-installed bolts or rebar dowels.

STRUCTURAL STEEL per IBC Section 1704.3 and Table 1704.3 at the site and the fabrication Shop, (without IBC 1704.2.2 waiver), shall be done in accordance with the following requirements:

- Periodic inspection required:
  - Prior to the start of Fabrication for:
    - Verification of Shop compliance with IBC Section 1704.2.1 for completeness and adequacy of Fabrication and Quality Control procedures.
    - Verification of Shop compliance with AWS D1.1-2004 Structural Welding Code
    - Verification of Shop compliance with AISC 360-05 Chapter M & Code of Standard Practice.
  - During welding of Single-pass Fillet Welds NOT exceeding 5/16" size as noted in IBC Table 1704.3.
  - During Field welding of all Metal Floor and Metal Roof Deck per AWS D1.3 as noted in IBC Table 1704.3.
  - During the welding operations - Verification of welder qualifications
  - During the welding operations - Verification of valid weld procedure specifications per AWS D1.1.
  - Prior to painting, shipping to site and erection - Verification of all welded joints per AWS D1.1 Table 6.1.
  - Prior to the start of Erection - Verification of framing requirements and bolting procedures per AISC.
  - During High Strength Bolting per IBC Section 1704.3.2 and 1704.3.3
- Continuous inspection required during:
  - Welding of Complete- or Partial Joint Penetration (CJP or PJP) Groove Welds per IBC Table 1704.3 & 1707.
  - Welding of Multi-pass Fillet Welds and Fillet Welds exceeding 5/16" size per IBC Table 1704.3 & 1707

WOOD CONSTRUCTION per IBC Section 1704.6 & 1707.3:

- Periodic inspection required for verification of:
  - Shear Walls: Anchor Bolts, Hold-downs (HD) and Continuous Rod Tie-Down Systems (TDS) including squash blocks, LPT shear connectors, strap connectors, boundary edge nailing, plate nailing and panel edge shear nailing for size & spacing [where fastener spacing of the sheathing is 4 inches or less].
  - Diaphragms: blocking, strap connections, boundary edge and panel shear nailing size & spacing [where fastener spacing of the sheathing is 4 inches or less].
  - Moisture content of wood studs, plates, beams and joists.
  - Proper bottom plates sizes (2x and 3x) and plate washers.
  - Roof truss "hurricane" clips.

POST-INSTALLED ANCHORS TO CONCRETE AND MASONRY: shall comply with IBC Section 1703. Inspections shall be in accordance with the requirements set forth in the approved ICC Evaluation Report and as indicated by the design requirements specified on the drawings. Refer to the POST INSTALLED ANCHORS section of these notes for anchors that are the basis of the design. Special inspector shall verify anchors are as specified in the POST INSTALLED ANCHORS section of these notes or as otherwise specified on the drawings. Substitutions require approval by the SER and require substantiating calculations and current 2009 IBC recognized ICC Evaluation Services (ES) Report. Special Inspector shall document in their Special Inspection Report compliance with each of the elements required within the applicable ICC Evaluation Services (ES) Report.

INSPECTION SUBMITTALS: Special inspection reports shall be provided on a weekly basis. Final special inspection reports will be required by each special inspection firm per IBC 1704.1.2. Submit copies of all inspection reports to the Architect/Engineer and the Authority Having Jurisdiction for review.

STRUCTURAL OBSERVATION: This project is Seismic Design Category (A B C) and Structural Observation is not required., however structural observation site visits are recommended as follows: during foundation installation, prior to each elevated floor pour, after the third level floor diaphragm is complete and after roof diaphragm is complete and prior roofing. Contractor shall notify the SER in a timely manner to allow scheduled Observations to occur. Field (Observation) Reports will be distributed to the Architect, the Contractor, Special Inspector and the Authority Having Jurisdiction.

CONTRACTOR RESPONSIBILITY: Prior to issuance of the building permit, the Contractor is required to provide the Authority Having Jurisdiction a signed, written acknowledgement of the Contractor's responsibilities associated with the above Statement of Special Inspections addressing the requirements listed in IBC Section 1709. Contractor is referred to IBC Chapter 1707.6 and 1707.7 for architectural and MEP building systems that may be subject to additional inspections (based on the building's designated Seismic Design Category listed in the CRITERIA), including anchorage of HVAC ductwork containing hazardous materials, piping systems and mechanical units containing flammable, combustible or highly toxic materials, electrical equipment used for emergency or standby power, exterior wall panels and suspended ceiling systems.

PREFABRICATED CONSTRUCTION: All prefabricated construction shall conform to IBC Section 1703.

SOILS AND FOUNDATIONS

REFERENCE STANDARDS: Conform to IBC Chapter 18 "Soils and Foundations."

GEOTECHNICAL REPORT: Recommendations contained in "Geotechnical Investigation Report Proposed Liberty Lake Commercial Development Parcels A-20, A-21, and A-22 Country Vista Drive and Whitman Lane, Liberty Lake, WA" by Kleinfelder (6/21/05) were used for design.

CONTRACTOR'S RESPONSIBILITIES: Contractor shall be responsible to review the Geotechnical Report and shall follow the recommendations specified therein including, but not limited to, subgrade preparations, pile installation procedures, ground water management and steep slope Best Management Practices."

GEOTECHNICAL SUBGRADE INSPECTION: The Geotechnical Engineer shall inspect all sub-grades and prepared soil bearing surfaces, prior to placement of foundation reinforcing steel and concrete. Geotechnical Engineers shall provide a letter to the owner stating that soils are adequate to support the "Allowable Foundation Bearing Pressure(s)" shown below.

DESIGN SOIL VALUES:

Allowable Foundation Bearing Pressure	3000	PSF - Structural Fill
Passive Lateral Pressure	350PSF/FT	
Active Lateral Pressure (unrestrained)	35 PSF/FT	
Active Lateral Pressure (restrained)	55 PSF/FT	
Coefficient of Sliding Friction	0.35	

FOUNDATIONS and FOOTINGS: Foundations shall bear on either on competent native soil or compacted structural fill as per the geotechnical report. Exterior perimeter footings shall bear not less than 24 inches below finish grade, unless otherwise specified by the geotechnical engineer and/or the building official.

FOOTING DEPTH: Tops of footings shall be as shown on plans with vertical changes as indicated with steps in the footings; locations of steps shown as approximate and shall be coordinated with the civil grading plans to ensure that the exterior perimeter footings bear no less than 24 inches below finish grade, or as otherwise indicated by the geotechnical engineer or building official.

SLABS-ON-GRADE: All slabs-on-grade shall bear on compacted structural fill or competent native soil per the geotechnical report. All moisture sensitive slabs-on-grade or those subject to receive moisture sensitive coatings/covering shall be provided with an appropriate capillary break and vapor barrier/retardant over the subgrade prepared and installed as noted in the geotechnical report, barrier manufacturer's written recommendations and coordinated with the finishes specified by the Architect.

CAST-IN-PLACE CONCRETE

REFERENCE STANDARDS: Conform to:
(1) ACI 301-05 "Specifications for Structural Concrete",
(2) IBC Chapter 19-Concrete,
(3) ACI 318-08/318R-08
(4) ACI 117-10

FIELD REFERENCE: The contractor shall keep a copy of ACI Field Reference manual, SP-15, "Standard Specifications for Structural Concrete (ACI 301) with Selected ACI and ASTM References."

CONCRETE MIXTURES: Conform to ACI 301 Section 4 "Concrete Mixtures" and IBC Section 1904.3.

MATERIALS: Conform to ACI 301 Section 4.2.1 "Materials" for requirements for cementitious materials, aggregates, mixing water and admixtures.

SUBMITTALS: Provide all submittals required by ACI 301 Section 4.1.2. Submit mix designs for each mix in the table below. Substantiating strength results from past tests shall not be older than 12 months per ACI 318 Section 5.3.

TABLE OF MIX DESIGN REQUIREMENTS

Member Type/Location	Strength f'c (psi)	Test Age (days)	Maximum Aggregate	Exposure Class	Max W/C Ratio	Air Content	Notes (1 to 8TypicalUNO)
Footings	3000	28	1"	-	-	-	-
Exterior Slabs on Grade & Sidewalks	3000	28	1"	-	0.45	5%	-
Interior Slabs on Grade	3000	28	1"	-	0.5	-	-
Stem Walls & Curbs	3000	28	1"	-	-	-	-
Exterior Stem Walls & Curbs	3000	28	1"	-	0.45	5%	-

Table of Mix Design Requirements Notes:

(1) W/C Ratio: Water-cementitious material ratios shall be based on the total weight of cementitious materials. Maximum ratios are controlled by strength noted in the Table of Mix Design Requirements and durability requirements given in ACI 318 Section 4.3.

(2) Cementitious Materials:
   a. The use of fly ash, other pozzolans, silica fume, or slag shall conform to ACI 318 Sections 4.3.1 and 4.4.2. Maximum amount of fly ash shall be 25% of total cementitious content unless reviewed and approved otherwise by SER.
   b. For concrete used in elevated floors, minimum cementitious-materials content shall conform to ACI 301 Table 4.2.2.1. Acceptance of lower cement content is contingent on providing supporting data to the SER for review and acceptance.
   c. Cementitious materials shall conform to the relevant ASTM standards listed in ACI 318 Section 3.2.1.

(3) Air Content: Conform to ACI 318 Section 4.4.1. Minimum standards for exposure class are noted in the table. If freezing and thawing class is not noted, air content given is that required by the SER. Concrete surfaces in contact with the soil require entrained air. Tolerance is ±1-½%. Air content shall be measured at point of placement.

(4) Aggregates shall conform to ASTM C33.

(5) Slump: Conform to ACI 301 Section 4.2.2.2. Slump shall be determined at point of placement.

(6) Chloride Content: Conform to ACI 318 Section 4.3.1.

(7) Non- chloride accelerator: Non-chloride accelerating admixture may be used in concrete placed at ambient temperatures below 50°F at the contractor's option.

(8) ACI 318, Section 4 exposure classes shall be assumed to be F0, S0, P0, and C0 unless different exposure classes are listed in the Table of Mix Design Requirements that modify these base requirements.

(9) Shrinkage Limit: Concrete used in elevated slabs and beams shall have a shrinkage limit of .035% at 28 days measured in accordance with ASTM C157. Submit laboratory test results to SER for approval prior to construction.

(10) Type: All concrete mix for foundations shall be type I/II Portland cement.

FORMWORK & RESHORING: Conform to ACI 301 Section 2 "Formwork and Form Accessories." Removal of Forms shall conform to Section 2.3.2 except strength indicated in Section 2.3.2.5 shall be 0.75 f' c. Reshoring shall conform to Section 2.3.3.

MEASURING, MIXING, AND DELIVERY: Conform to ACI 301 Section 4.3.

HANDLING, PLACING, CONSTRUCTING AND CURING: Conform to ACI 301 Section 5. In addition, hot weather concreting shall conform to ACI 305.1-06 and cold weather concreting shall conform to ACI 306.1-90.

CONCRETE CURING: Provide curing compounds for concrete as follows:

(1)Use membrane curing compounds that are compatible with and will not affect surfaces to be covered with finish materials applied directly to concrete.

(2) Apply curing compounds at a rate equivalent to the rate of application at which curing compound was originally tested for in conformance to the requirements of ASTM C 309-07 and the manufacturer's recommendations.

(3) Apply specified curing compound to concrete slabs as soon as final finishing operations are complete (within 2 hours and after surface water sheen has disappeared). Apply uniformly in continuous operation by power spray or roller in accordance with manufacturer's directions. Recoat areas subjected to heavy rainfall within 3 hours after initial application. Maintain continuity of coating and repair damage during curing period.

(4) Use curing compound compatible with and applied under direction of system manufacturer of protective sealer.

(5) Apply two separate coats with first allowed to become tacky before applying second. Direction of second application shall be at right angles to direction of first.

CONCRETE SEALER: Concrete silane sealer containing 40% solids shall be applied to the top surface of elevated slabs exposed to weather and the top surface of elevated slabs used for parking ramps and parking decks and extended up vertical surfaces twenty-four (24) inches.

CONSTRUCTION JOINTS: Conform to ACI 301 Sections. 2.2.2.5, 5.2.2.1 and 5.3.2.6. Construction joints shall be located and detailed as on the construction drawings. Submit alternate locations per ACI 301 Section 5.1.2.3a for review and approval by the SER two weeks minimum prior to forming. Use of an acceptable adhesive, surface retardant, portland cement grout or roughening the surface is not required unless specifically noted on the drawings.

EMBEDDED ITEMS: Position and secure in place expansion joint material, anchors and other structural and non-structural embedded items before placing concrete. Contractor shall refer to mechanical, electrical, plumbing and architectural drawings and coordinate other embedded items.

SHRINKAGE: Conventional and post-tensioned concrete slabs will continue to shrink after initial placement and stressing of concrete. Contractor and subcontractor shall coordinate jointing and interior material finishes to provide adequate tolerance for expected structural frame shrinkage and shall include, but not be limited to: curtain wall, dryvit, storefront, skylight, floor finish, and ceiling suppliers. Contact Engineer for expected range of shrinkage.

FLOOR FINISHES: The contractor must provide and correctly install an isolation membrane and properly detailed expansion joints to help minimize cracking of finishes with cementitious setting beds or finish properties (tile, stone, terrazzo, concrete topping, etc). The expansion joints shall be sized for an expected shortening movement of 0.01 inches per foot.

STRENGTH TESTING AND ACCEPTANCE:

Testing: Obtain samples and conduct tests in accordance with ACI 301 Section 1.6.4.2. Additional samples may be required to obtain concrete strengths at alternate intervals than shown below.

- Cure 5 cylinders for 56-day test age. Test one at 7 days, one at 28 days, 2 at 56 days and hold 1 cylinder in reserve for use as the Engineer directs. After 72 days, unless notified by the Engineer to the contrary, the reserve cylinder may be discarded without being tested for specimens meeting 56-day strength requirements.

Acceptance. Strength is satisfactory when:

(1) The averages of all sets of 3 consecutive tests equal or exceed the specified strength.

(2) No individual test falls below the specified strength by more than 500 psi.

A "test" for acceptance is the average strength of two 6 by 12 in. cylinders or three 4 by 8 in. cylinders tested at the specified test age.

CONCRETE PLACEMENT TOLERANCE: Conform to ACI 117-10 for concrete placement tolerance.

CONCRETE REINFORCEMENT

REFERENCE STANDARDS: Conform to:
(1) ACI 301-05 "Standard Specifications for Structural Concrete", Section 3 "Reinforcement and Reinforcement Supports."
(2) ACI SP-66-04 "ACI Detailing Manual" including ACI 315-99 "Details and Detailing of Concrete Reinforcement."
(3) CRSI MSP-09, 28th Edition, "Manual of Standard Practice."
(4) ANSI/AWS D1.4 "Structural Welding Code - Reinforcing Steel."
(5) IBC Chapter 19-Concrete.
(6) ACI 318-08.
(7) ACI 117-10

SUBMITTALS: Conform to ACI 301 Section 3.1.1 "Submittals, data and drawings." Submit placing drawings showing fabrication dimensions and locations for placement of reinforcement and reinforcement supports.

MATERIALS:

Reinforcing Bars	ASTM A615, Grade 60, deformed bars.
Weldable Reinforcing Bars	ASTM A706, Grade 60, deformed bars.
Smooth Welded Wire Fabric	ASTM A185
Deformed Welded Wire Fabric	ASTM A497
Bar Supports	CRSI MSP-09, Chapter 3 "Bar Supports."
Tie Wire	16 gage or heavier, black annealed.
Headed Deformed Bars.....ASTM A970	

FABRICATION: Conform to ACI 301, Section 3.2.2. "Fabrication", and ACI SP-66 "ACI Detailing Manual."

No.	REVISIONS/SUBMISSIONS	Date

Reviewed
Drawn
Checked
CAD File No.

Seal

THE CONTRACTOR SHALL CHECK AND VERIFY ALL ASPECTS OF THE DRAWINGS AND REPORT ANY OMISSIONS TO THE ARCHITECT PRIOR TO COMMENCING WORK. ALL CONSTRUCTION SHALL CONFORM TO CODES AND ORDINANCES, LEGAL REQUIREMENTS AVAILABLE AT THE TIME OF CONSTRUCTION. DRAWINGS ARE DIAGRAMMATIC IN NATURE, AND DO NOT PURPORT TO REPRESENT ALL ITEMS REQUIRED FOR COMPLETION OF THE WORK. DRAWINGS SHALL NOT BE SCALED.

KUNPENG LLC
RETAIL SHELL BUILDING
LIBERTY LAKE, WASHINGTON

Drawing Title: GENERAL NOTES

Submittal
Date: 9/20/2016
Scale
Project No.

Drawing No.
S1.0
NO. of SET

WELDING: Bars shall not be welded unless authorized. When authorized, conform to ACI 301, Section 3.2.2.2. "Welding" and provide ASTM A706, grade 60 reinforcement.

PLACING: Conform to ACI 301, Section 3.3.2 "Placement." Placing tolerances shall conform to ACI 117.

CAST-IN-PLACE CONCRETE COVER AND REINFORCING PROTECTION: Conform to the following cover and corrosion protection requirements unless noted otherwise in the drawings:

Reinforcement Location	Minimum Cover	Rebar Protection
Footing Bottom Reinforcing	3"	Uncoated
Footing Top Reinforcing	2"	Uncoated
Slab-on-Grade Reinforcing	2" from top	Uncoated

SPLICES: Conform to ACI 301, Section 3.3.2.7, "Splices". Refer to "Typical Lap Splice and Development Length Schedule" for typical reinforcement splices. Refer to "Column Vertical Reinforcing Splice Schedule" and "Shear Wall Reinforcing Splice Schedule" for those specific elements. Splices indicated on individual sheets shall control over the schedule. Mechanical connections may be used when approved by the SER. For reinforcing within the lateral system and reinforcing connecting the diaphragm slab to the lateral system, mechanical splice strength is increased to develop 100 percent of the specified tensile strength of the splices bar.

FIELD BENDING: Conform to ACI 301 Section 3.3.2.8, "Field Bending or Straightening." Bar sizes #3 through #5 may be field bent cold the first time. Other bars require preheating. Do not twist bars. Bars shall not be bent past 45 degrees.

STRUCTURAL STEEL

DESIGN STANDARDS:
Structural Steel for this project is designed in accordance with American Institute of Steel Construction (AISC) Specifications.

REFERENCE STANDARDS: Conform to:
1) IBC Chapter 22 "Steel"
2) AISC - Manual of Steel Construction, Thirteenth Edition
3) ANSI/AISC 303-05 - Code of Standard Practice for Steel Buildings & Bridges, hereafter referenced as AISC 303
4) ANSI/AISC 360-05 - Specification for Structural Steel Buildings, hereafter referenced as AISC 360
5) AISC348-04/RCSC - Specification for Structural Joints using ASTM A325 or A490 Bolts, prepared by "Research Council on Structural Connections (RCSC), hereafter referenced as RCSC
6) AWS D1.1 -04 - Structural Welding Code - Steel, hereafter referenced as AWS D1.1

SUBMITTALS:
(1) Shop drawings shall be prepared in accordance with AISC 360 Section M.1 and AISC 303 Section 4.
(2) Submit welder's certificates verifying qualification within past 12 months.
(3) Affidavit stating the steel provided meets the requirements of the grade(s) specified.
(4) Manufacturer's engineering and installation information for post-Installed Adhesive Anchors including applicable ICC Engineering Research (ER-xxxx) Report.

MATERIALS:

Wide Flange (W), Tee (WT) Shapes	ASTM A992 Fy = 50 ksi	
Structural (S), (M) & (HP) Shapes	ASTM A36, Fy = 36 ksi	
Channel (C) & Angle (L) Shapes	ASTM A36, Fy = 36 ksi	
Structural Bars & Plates (PL)	ASTM A36, Fy = 36 ksi	
Structural Bars & Plates (PL) part of the SLRS	ASTM A572, Fy = 50ksi	
Hollow Structural Section - Square/Rect (HSS)	ASTM A500, Grade B	Fy = 46 ksi
High-Strength Bolts	ASTM A325, Type 1, Plain, Galvanized at Exterior	
Nuts ASTM A563		
Washers (flat or beveled)	ASTM F436-required @ slotted & oversize holes	
Anchor Rods (Anchor Bolts)	ASTM F1554, Gr. 36	
Welded Headed Studs (WHS) 3/4" or 7/8"	ASTM A108 - Nelson/TRW S3L or equal	
Welded Headed Studs (WHS) 1/2" or 5/8"	ASTM A108 - Nelson/TRW H4L or equal	
Dowel Bar Anchors	ASTM A496 - Nelson/TRW D2L or equal	
Welding Electrodes	E70XX, E71TXX unless noted otherwise with a minimum toughness of 20 ft-lbs at 40 degrees Fahrenheit.	

ERECTION:
1) Conform to AISC 303, Section 7 "Erection", Section 8 "Quality Assurance," and AISC 360, Section M4.
2) The Erector shall maintain detailed fabrication & erection quality control procedures that ensure that the work is performed in accordance with AISC 360 Section M, AISC 303, and the Contract Documents.
3) Steel work shall be carried up true and plumb within the limits defined in AISC 303 Section 7.13.
4) Structural Welding to conform to the AWS D1.
5) Special Inspector shall inspect the steel framing to verify compliance with the details shown on the Contract Documents including member size, location, bracing and the application of proper joint details at each connection.
6) High strength bolting shall be periodically inspected by the Special Inspector per IBC Section 1704.3.3.

WOOD FRAMING

REFERENCE STANDARDS: Conform to:
(1) IBC Chapter 23 "WOOD"
(2) NDS - "2005 National Design Specification (NDS) for Wood Construction"
(3) APA PDS97 Plywood Design Specification (revised 1998)
(4) ANSI/TPI 1 "National Design Standard for Metal-Plate-Connected Wood Truss Construction"
(5) BCSI "Guide to Good Practice for Handling, Installing & Bracing of Metal Plated Connected Wood Trusses"
(6) TPI DSB "Recommended Design Specification for Temporary Bracing of Metal Plate Connected Wood Trusses"
(7) APA Report TT-045B "Minimum Nail Penetration for Wood Structural Panel Connections Subject to Lateral Loads"

SUBMITTALS: Submit shop drawings to the Architect/Engineer for review. Shop drawings shall include member size, spacing, camber, material type, grade, shop and field assembly details and connections, types and location of bolts and other fasteners. Supply shop drawings for the following:
(1) Glued laminated members
(2) PSL members
(3) LVL members
(4) LSL members

DEFERRED SUBMITTALS: Submit product data and proof of ICBO approval for framing members and fasteners that have been designed by others. Submit calculations prepared by the SSE in the state of Illinois for all members and connections designed by others along with shop drawings. All necessary bridging, blocking, blocking panels and web stiffeners shall be detailed and furnished by the supplier. Temporary and permanent bridging shall be installed in conformance with the manufacturer's specifications. Deflection limits shall be as noted under DESIGN LOADS section. Products included are:

- Metal plate connected roof trusses (prefabricated roof trusses) shop drawings shall provide for shapes, bearing points, intersections, hips, and valleys shown on the drawings. The manufacturer shall provide special hip, valley and intersection areas (step down trusses, jack trusses and girder trusses) unless specifically indicated on the plans. Provide all truss-to-truss and truss-to-support connection details and required connection materials. Specify temporary and permanent bracing and connections on the shop drawings. Provide all truss reactions on shop drawings.
- Solid web wood joists (I-joists)
- Open web wood trusses

IDENTIFICATION: All sawn lumber and pre-manufactured wood products shall be identified by the grade mark or a certificate of inspection issued by the certifying agency.

MATERIALS:
- Sawn Lumber: Conform to grading rules of WWPA, WCLIB or NLGA and Table below. Finger jointed studs acceptable at interior walls only. Unless noted on plans and details, the minimum species and grade for framing members shall be as follows:

TABLE of SOLID SAWN LUMBER

Member Use	Size	Species	Grade
Light Framing/Studs	2x4	DFL	Stud
Light Framing/Studs	2x6	DFL	No.2
Light Framing/Posts	4x4, 4x6, 4x8	DFL	No.2
Joists & Planks	2x6 2x12	DFL	No. 2
Joists & Planks	2x6 2x12	DFL	No. 2
Beams & Stringers	4x8 4x12	DFL	No. 2
Beams & Stringers	6x8 6x12	DFL	No. 1
Posts & Timbers	6x6	DFL	No. 1
Posts & Timbers	8x8	DFL	No. 1

- Glued Laminated Timber: Conform to AITC 117-2004 "Standard Specifications for Structural Glue-laminated Timber of Softwood Species, Manufacturing and Design" and ANSI/AITC A190.1 "Structural Glued Laminated Timber." Camber all glued laminated beams, except cantilevered and continuous beams, to 3000' radius, unless shown otherwise on the plans.

TABLE of GLULAM and GRADE

Member	Sizes	Species	Comb. Symbol	Uses
Beams	All	DF/DF	24F-V4	Simple Spans
Beams	All	DF/DF	24F-V8	Continuous or with Cantilever Spans
Columns	All	DF	L2	Post, Truss Member

- Glued Laminated Timber; PRESERVATIVE TREATMENT - (TREATED AFTER GLUING): Glued laminated timber requiring preservative treatment shall be in accordance with AWPA Standard U1 and T1. Retentions shall be:

UC1: interior construction, above ground, dry-interior construction and furnishings

UC2: Interior construction, above ground, damp-interior construction.

UC3B: Exterior construction, above ground, uncoated or poor water run-off-decking, deck joists, railings, fence pickets, uncoated millwork

UC4A: Ground contact or fresh water, non-critical components-fence, deck and guardrail posts, crosstie and utility poles.

TABLE of GLULAM USE and PRESERVATIVE PENETRATION (PCF) REQUIREMENTS

USE CATEGORY	PRESERVATIVE SYSTEM		
UC1, UC2, UC3B	PCP-A or PCP-C	Cu-8-Q	CuN
Southern Pine	0.30 PCF	0.02 PCF	0.40 PCF
Coastal Douglas-fir	0.30 PCF	Not Applicable	0.40 PCF
Western Hemlock, Hem-fir	0.30 PCF	0.02 PCF	0.40 PCF
UC4A			
Southern Pine	0.60 PCF	NA	0.06 PCF
Coastal Douglas-fir	0.60 PCF	NA	0.06 PCF
Western Hemlock, Hem-fir	0.60 PCF	NA	0.06 PCF

Glulam that is to be preservative-treated should be trademarked with the APA EWS stamp and must be bonded with wet-use adhesives conforming to ANSI A190.1. Incising is required for Douglas-fir, western hemlock and hem-fir. Most glue laminated timber to be pressure-treated will be in custom sizes and should be ordered to exact dimensions when possible to avoid filed cuts, which must be retreated. In addition, all fabrication, cutting and pre-drilling of holes for fasteners is recommended prior to preservative-treating. Field treatment should be applied to saturation by dipping, brushing, spraying, soaking or coating in accordance with AWPA Standard M4.

Fasteners used to connect preservative-treated glue laminated timber should be corrosion resistant to withstand the effects of the high-moisture environment to which these members are typically exposed. Aluminum should not be used in direct contact with wood treated with copper based solutions.

- Metal Plate Connected Wood Roof Trusses: Conform to IBC Section 2303.4. [HUD Truss Connector Bulletin for Metal Plate Connected Wood Trusses is required.] Truss Supplier to provide design and materials for all permanent truss bracing.
- Wood Structural Sheathing (Plywood): Wood APA-rated structural sheathing includes: all veneer plywood, oriented strand board, waferboard, particleboard, T1-11 siding, and composites of veneer and wood based material with T&G joint. Architect may disallow OSB. Confirm with Architect. Conform to "Construction and Industrial Plywood" based on Product Standard PS 1-07 by the U.S. Dept. of Commerce, and "Performance Standard for Wood-Based Structural-Use Panels" based on Product Standard PS 2-04 by the U.S. Dept. of Commerce and "Plywood Design Specification (revised 1998)" based on APA PDS97 by the American Plywood Association. Unless noted otherwise, sheathing shall comply with the following table:

TABLE of SHEATHING - Use, Minimum Thickness and Minimum APA Rating

Location	Thickness	Span Rating	Plywood Grade	Exposure
Roof	15/32"	32/16	C-D	1
Floor	23/32" T&G	24 OC	STURD-I-FLOOR	1
Walls	15/32"	32/16	C-D	1

- Unless noted otherwise on drawings, install roof and floor panels with long dimension across supports and with panel continuous over two or more spans. End joints shall occur over supports.
- Timber Connectors: Shall be "Strong Tie" by Simpson Company as specified in their latest catalog. Alternate connectors by other manufacturers may be substituted provided they have current ICC approval for equivalent or greater load capacities and are reviewed and approved by the SER prior to ordering. Connectors shall be installed per the manufacturer's instructions. Where connector straps connect two members, place one-half of the nails or bolts in each member. Where straps are used as hold-downs, nail straps to wood framing just prior to drywall application, as late as possible in the framing process to allow the wood to shrink and the building to settle. Premature nailing of the strap may lead to strap buckling and potential finish damage.

  Where connectors are in exposed exterior applications in contact with preservative treated wood (PT) other than CCA, connectors shall be either batch hot-dipped galvanized (HDG), mechanically galvanized (ASTM B695, Class 40 or greater) stainless steel, or provided with 1.85 oz/sf of zinc galvanizing equal to or better than Simpson ZMAX finish.
- Fasteners (nails, bolts, screws, etc) attaching timber connectors (joist hangers, post caps and bases, etc) to PT wood shall have similar corrosion resistance properties (matching protective treatments) as the protected connector. Fasteners (nails, bolts, screws, etc) attaching sawn timber members or sheathing (shear walls) to PT wood be corrosion resistant; nails and lag bolts shall be either HDG (ASTM A153) or stainless steel. Verify the suitability of the fastener protection/coating with the wood treatment chemical manufacturer/supplier.

  Provide washers under the heads and nuts of all bolts and lag screws bearing on wood. All nails 12d and smaller shall be full length common unless noted otherwise. 16d nails may be 16d sinkers unless noted otherwise. Nail straps to wood framing as late as possible in the framing process to allow the wood to shrink and the building to settle. Premature nailing of the strap may lead to strap buckling and potential finish damage.
- Fasteners: Conform to IBC Section 2304.9 "Connections and fasteners." Unless noted on plans, nail per Table 2304.9.1. Unless noted otherwise all nails shall be common. Alternate nails may be used but are subject to review and approval by the Structural Engineer. Substitution of staples for the nailing of rated sheathing is subject to review by the structural engineer prior to construction.
- Lag Bolts/Bolts: Conform to ASTM A307 and IBC Section 2304.9.
- Engineered Wood Products (TrusJoist): The following materials are based on lumber manufactured by TrusJoist and were used for the design as shown on the plans. Alternate products by other manufacturers may be substituted provided they have current ICC approval for equivalent or greater load and stiffness properties and are reviewed and approved by the Structural Engineer.
  a. Laminated Veneer Lumber (LVL): Conform to ICC ES Report No. ESR-1387 or CCMC Report No. 08675-R.
  b. Laminated Strand Lumber (LSL): Conform to ICC ES Report No. ESR-1387 or CCMC Report No. 12627-R.
  c. Tapered and Parallel Chord I-JOISTS (Deferred Submittal): Conform to ICC Report No. ESR-1153. The Open Web Wood Trusses: Conform to NES Report No. ICC Report No. ESR-1774. The manufacturer shall design the joists for the spans and conditions shown on the plans. Trusses shall have wood chords and either wood or metal webs.

TABLE of ENGINEERED WOOD Requirements

Type	Use	Widths	E(10^6) PSI	Fb PSI	Fv PSI	Fc// PSI
LSL Rimboard	Rimboard or Stair Stringer	1 ½" 1 ¾"	1.3E	1,700	400	1,400
Timberstrand LSL	Header, Beam or Column < 9" depth	3 ½"	1.3E	1,700	400	1,400
Timberstrand LSL	Rimboard, Header or Beam = 9" depth	1 ¾", 3 ½"	1.55E	2,325	310	2,050
Timberstrand LSL	Wall Stud 2x4 & 2x6	1 ½"	1.3E	1,700	400	1,400
	Wall Stud >2x6	1 ½"	1.5E	2,250	400	1,950
	[Studs-commercial	1 ½", 2 ½"	1.6E	2,425	400	2,150]
Microllam LVL	Header, Beam	1 ¾"	1.9E	2,600	285	2,510
Parallam PSL	Header, Beam	3 ½", 5 ¼", 7"	2.0E	2,900	290	2,900
Parallam PSL	Column	3 ½", 5 ¼", 7"	1.8E	2,400	230	2,500

NAILING REQUIREMENTS: Provide minimum nailing in accordance with IBC Table 2304.9.1. "Fastening Schedule" except as noted on the drawings. Nailing for roof/floor diaphragms/shear walls shall be per drawings. Nails shall be driven flush and shall not fracture the surface of sheathing.

STANDARD LIGHT-FRAME CONSTRUCTION: Unless noted on the plans, construction shall conform to IBC Section 2308 "Conventional Light-Frame Construction."

NAILERS ON STEEL COLUMNS and BEAMS: Wood 3x (or (2) 2x) nailers are generally required on all HSS columns and steel beams abutting or embedded within wood framing. Unless noted otherwise, attach with 5/8" diameter bolts or welded studs at 16" on centers. Wood nailers on beams supporting joist hangers shall not overhang the beam flange by more than ¼".

MOISTURE CONTENT: Wood material used for this project shall have maximum moisture content of 19% except for the pressure-treated wood sill plate. Refer to TESTING & INSPECTIONS for the verification of these limits. The maximum moisture content required may be less than 19% when based on a particular cladding/insulation system. Refer to the Architect's drawings, and project specifications, or with cladding installer for maximum recommended moisture content.

CLADDING COMPATIBILTY: The Architect/Owner shall review the cladding and insulation systems proposed for the project with respect to their performance over wood studs with moisture contents greater than 19%. EIFS systems should be avoided on wood-framed projects due to problems with moisture proofing.

PRESERVATIVE TREATMENT (PT): Wood materials are required to be "treated wood" in accordance with IBC Section 2304.11. "Decay and Termite Protection" shall conform to the appropriate standards of the American Wood-Preservers Association (AWPA) for sawn lumber, glued laminated timber, round poles, wood piles and marine piles. Follow American Lumber Standards Committee (ALSC) quality assurance procedures. Products shall bear the appropriate mark. Fasteners or anchors in treated wood shall be of stainless steel or hot-dipped galvanized or as per IBC 2304.9.5.

Mud sill plates in normally dry interior applications may be treated with Sodium Borate (DOT - Disodium Octaborate Tetrahydrate) as recent studies have noted less connector corrosion potential than other available wood treatments or the original CCA treated sill plates. Wood treated with Sodium Borate shall be protected during shipment, storage and installation to minimize leaching of the water-soluble preservative from the lumber. Sodium borate pressure treated plates do not require hot-dipped galvanized connectors.

If using sill plates other than CCA or sodium borate, fasteners must be hot dipped galvanized or stainless steel. Fasteners (nails, bolts, screws, washers & lag screws) attaching timber connectors (joist hangers, post caps and bases, etc) to PT wood shall have similar corrosion resistance properties (matching protective treatments) as the protected connector; that is, use hot dipped galvanized or stainless steel fasteners. Fasteners (nails, bolts, screws, washers & lag screws) attaching sawn timber members or sheathing (shear walls) to Pressure Treated wood be corrosion resistant (hot dipped galvanized or stainless steel.

Always verify the suitability of the fastener protection/coating with the wood treatment chemical manufacturer/supplier.

ABBREVIATIONS

∠	ANGLE	FDN	FOUNDATION	ℙ	PLATE
AB	ANCHOR BOLT	FIN	FINISH	PAF	POWDER ACTUATED FASTENER
ADDL	ADDITIONAL	FLR	FLOOR	PC	PRECAST
ALT	ALTERNATE	FTG	FOOTING	PERP	PERPENDICULAR
ARCH	ARCHITECTURAL	F/	FACE OF	PLWD	PLYWOOD
B OR BOT	BOTTOM	GA	GAGE	PP	PARTIAL PENETRATION
B/	BOTTOM OF	GALV	GALVANIZED	PREFAB	PREFABRICATED
BLDG	BUILDING	GEOTECH	GEOTECHNICAL	PSF	POUNDS PER SQUARE FOOT
BLKG	BLOCKING	GL	GLUE LAMINATED TIMBER	PSI	POUNDS PER SQUARE INCH
BP	BASEPLATE	GWB	GYPSUM WALL BOARD	PSL	PARALLEL STRAND LUMBER
BRG	BEARING	HDR	HEADER	P-T	POST TENSIONED
BTWN	BETWEEN	HGR	HANGER	PT	PRESSURE TREATED
℄	CENTERLINE	HD	HOLD-DOWN	R	RADIUS
C	CAMBER	HORIZ	HORIZONTAL	REF	REFER/REFERENCE
CIP	CAST IN PLACE	HP	HIGH POINT	REINF	REINFORCING
CJ	CONSTRUCTION OR CONTROL JOINT	HSS	HOLLOW STRUCTURAL SECTION	REQD	REQUIRED
CJP	COMPLETE JOINT PENETRATION	ID	INSIDE DIAMETER	RET	RETAINING
CLR	CLEAR	IF	INSIDE FORCE	SCHED	SCHEDULE
CMU	CONCRETE MASONRY UNIT	INT	INTERIOR	SHTG	SHEATHING
COL	COLUMN	k	KIPS	SIM	SIMILAR
CONC	CONCRETE	KSF	KIPS PER SQUARE FOOT	SOG	SLAB ON GRADE
CONN	CONNECTION	LF	LINEAL FOOT	SPEC	SPECIFICATION
CONST	CONSTRUCTION	LL	LIVE LOAD	SQ	SQUARE
CONT	CONTINUOUS	LLH	LONG LEG HORIZONTAL	SR	STUDRAIL
C'SINK	COUNTERSINK	LLV	LONG LEG VERTICAL	SF	SQUARE FOOT
CTRD	CENTERED	LP	LOW POINT	SST	STAINLESS STEEL
Ø	DIAMETER	LONGIT	LONGITUDINAL	STAGG	STAGGER/STAGGERED
DB	DROP BEAM	LSL	LAMINATED STRAND LUMBER	STD	STANDARD
DBA	DEFORMED BAR ANCHOR	LVL	LAMINATED VENEER LUMBER	STIFF	STIFFENER
DBL	DOUBLE	MAX	MAXIMUM	STL	STEEL
DEMO	DEMOLISH	MECH	MECHANICAL	STRUCT	STRUCTURAL
DIAG	DIAGONAL	MEZZ	MEZZANINE	SYM	SYMMETRICAL
DIST	DISTRIBUTED	MFR	MANUFACTURER	T	TOP
DL	DEAD LOAD	MIN	MINIMUM	T/	TOP OF
DN	DOWN	MISC	MISCELLANEOUS	T&B	TOP & BOTTOM
DP	DEPTH/DEEP	NIC	NOT IN CONTRACT	TC AX LD	TOP CHORD AXIAL LOAD
DWG	DRAWING	NTS	NOT TO SCALE	TCX	TOP CHORD EXTENSION
(E)	EXISTING	OC	ON CENTER	TDS	TIE DOWN SYSTEM
EA	EACH	OD	OUTSIDE DIAMETER	T&G	TOUNG & GROOVE
EF	EACH FACE	OF	OUTSIDE FACE	THKND	THICKENED
EL	ELEVATION	OPNG	OPENING	THRD	THREADED
ELEC	ELECTRICAL	OPP	OPPOSITE	THRU	THROUGH
ELEV	ELEVATOR	OWSJ	OPEN WEB STEEL JOIST	TRANSV	TRANSVERSE
EMBED	EMBEDMENT			TYP	TYPICAL
EQ	EQUAL			UNO	UNLESS NOTED OTHERWISE
EQUIP	EQUIPMENT			VERT	VERTICAL
EW	EACH WAY			WD	WIDE
EXP	EXPANSION			W/	WITH
EXP JT	EXPANSION JOINT			W/O	WITHOUT
EXT	EXTERIOR			WHS	WELDED HEAD STUD
				WP	WORKING POINT
				WWF	WELDED WIRE FABRIC
				±	PLUS OR MINUS

LEGEND

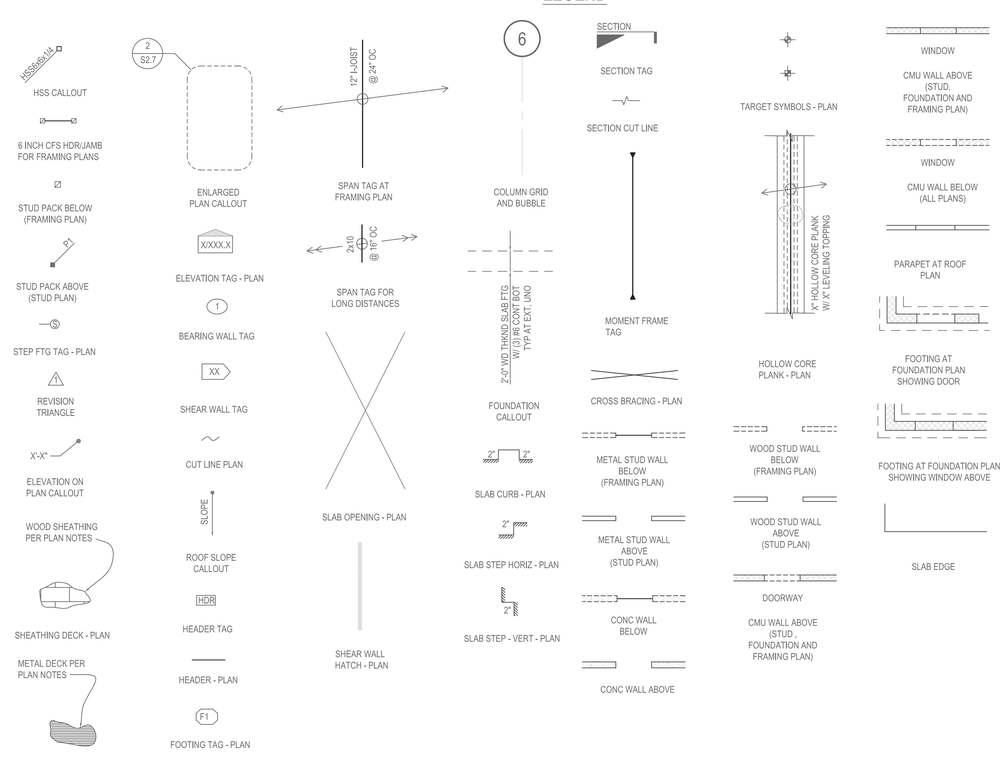

Reviewed
CAD File No.
Drawn
Checked
Date
No. REVISIONS/SUBMISSIONS

Seal
DANNY L.E.E. PATTERSON
STATE OF WASHINGTON
44446
REGISTERED
PROFESSIONAL ENGINEER

THE CONTRACTOR SHALL CHECK AND VERIFY ALL ASPECTS OF THE WORK, AND REPORT ERRORS AND OR OMISSIONS TO THE ARCHITECT PRIOR TO COMMENCING WORK. ALL WORK SHALL CONFORM TO CODES AND ORDINANCES, LOCAL AND NATIONAL, IN EFFECT AT THE TIME OF CONSTRUCTION. DRAWINGS ARE DIAGRAMMATIC IN NATURE. ALL ITEMS REQUIRED FOR COMPLETION OF THE WORK. DRAWINGS SHALL NOT BE SCALED.

KUNPENG LLC
RETAIL SHELL BUILDING
LIBERTY LAKE, WASHINGTON

Drawing Title: GENERAL NOTES
Date: 9/20/2016
Submittal
Scale
Project No.

Drawing No.
S1.1
NO. of SET

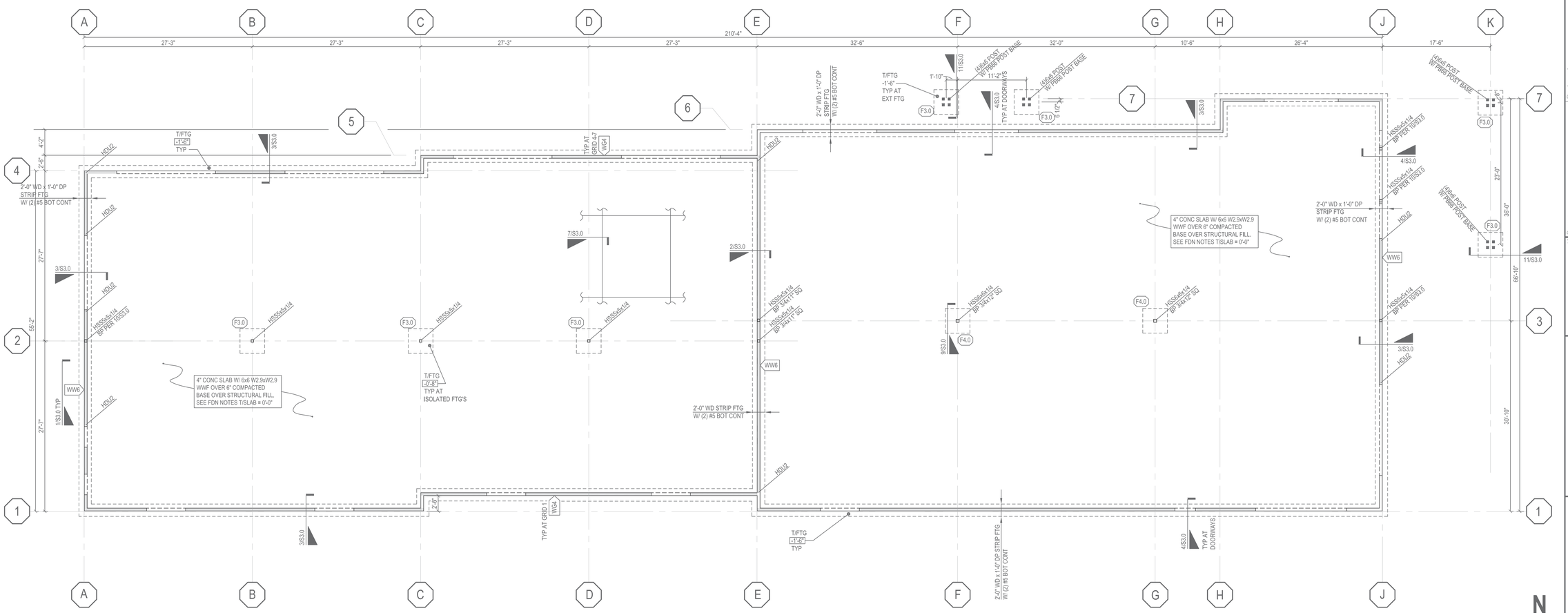

FOUNDATION PLAN

SCALE:1/8"=1'-0" (1)

FOOTING SCHEDULE			
CALLOUT	FOOTING SIZE	DEPTH	REINFORCING
F4.0	4'-0" SQ	12"	(4) #5 EW BOT
F3.0	3'-0" SQ	12"	(3) #5 EW BOT

FOUNDATION PLAN NOTES:

1. FOR STRUCTURAL GENERAL NOTES, DESIGN CRITERIA, AND ABBREVIATIONS, REFERENCE S1.0 AND S1.1.
2. VERIFY LOCATIONS OF COLUMNS, WALLS, OPENINGS, ETC WITH ARCHITECTURAL DRAWINGS BEFORE PLACING CONCRETE. PROVIDE BLOCKOUTS FOR PLUMBING, HVAC, AND SPECIAL EQUIPMENT AS SHOWN ON ARCHITECTURAL AND MEP PLANS.
3. TOP OF SLAB ELEVATION ASSUMED AT 0'-0" EXCEPT AS NOTED. REFERENCE CIVIL AND ARCHITECTURAL PLANS FOR ACTUAL TOP OF SLAB ELEVATION. REFERENCE ARCHITECTURAL DRAWINGS FOR DAMPPROOFING AND WATERPROOFING REQUIREMENTS FOR SLAB AND BASEMENT WALLS, INCLUDING BUT NOT LIMITED TO VAPOR BARRIER AND WATER STOP REQUIREMENTS.
4. INTERIOR FOOTINGS SHALL BEAR A MINIMUM OF 12" BELOW TOP OF SLAB UNLESS NOTED OTHERWISE ON PLAN. EXTERIOR FOOTINGS SHALL BEAR A MINIMUM OF 2'-0" BELOW FINISH GRADE, UNO.
5. ALL FOOTINGS AND SLABS SHALL BEAR ON COMPETENT STRUCTURAL FILL AND SUBGRADE PREPARATION AS INDICATED IN THE GEOTECH REPORT.
6. SLAB CONTROL JOINTS SHALL BE COORDINATED WITH THE ARCHITECTURAL DRAWINGS. REFERENCE TYPICAL SLAB CONSTRUCTION/CONTROL JOINT DETAIL FOR INFORMATION.
7. PROVIDE PRESSURE TREATED WOOD AT ALL LOCATIONS WHERE IN CONTACT WITH CONCRETE, WITHIN 8" OF EXPOSED GRADE, OR NOT OTHERWISE WEATHERPROOFED. ALL BOTTOM PLATES AT FOUNDATION SHALL BE DOUG-FIR.
8. FOOTINGS MAY REQUIRE WIDENING AND THICKENING TO MEET COVER REQUIREMENTS AT EMBEDDED HARDWARE AND HOLD-DOWNS. REFERENCE THE STUD AND SHEAR WALL REQUIREMENTS FOR WALL ANCHORAGE AND HOLD DOWN REQUIREMENTS.
9. TYPICAL DETAILS PER:

5/S3.0	TYPICAL REINFORCEMENT HOOKS AND BENDS
6/S3.0	TYPICAL STEPPED FOOTING DETAIL
7/S3.0	TYPICAL SLAB ON GRADE JOINT DETAILS
8/S3.0	TYPICAL CORNER REINFORCING AT CONCRETE WALLS
12/S3.1	REBAR TENSION LAP SPLICE SCHEDULE - CONCRETE

Reviewed
Drawn
Checked
CAD File No.
No. REVISIONS/SUBMISSIONS Date

Seal

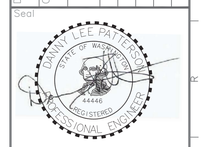

THE CONTRACTOR SHALL CHECK AND VERIFY ALL ASPECTS OF THE WORK AND REPORT ERRORS AND OR OMISSIONS TO THE ARCHITECT PRIOR TO COMMENCING WORK. ALL CONSTRUCTION SHALL CONFORM TO CODES AND ORDINANCES, LOCAL AND NATIONAL, IN EFFECT AT THE TIME OF CONSTRUCTION. DRAWINGS ARE DIAGRAMMATIC IN NATURE, AND DO NOT PURPORT TO REPRESENT ALL ITEMS REQUIRED FOR COMPLETION OF THE WORK. THESE DRAWINGS SHALL NOT BE SCALED.

KUNPENG LLC
RETAIL SHELL BUILDING
LIBERTY LAKE, WASHINGTON

Drawing Title: FOUNDATION PLAN

Date: 9/20/2016

Submittal

Scale

Project No.

Drawing No.

S2.0

NO. of SET

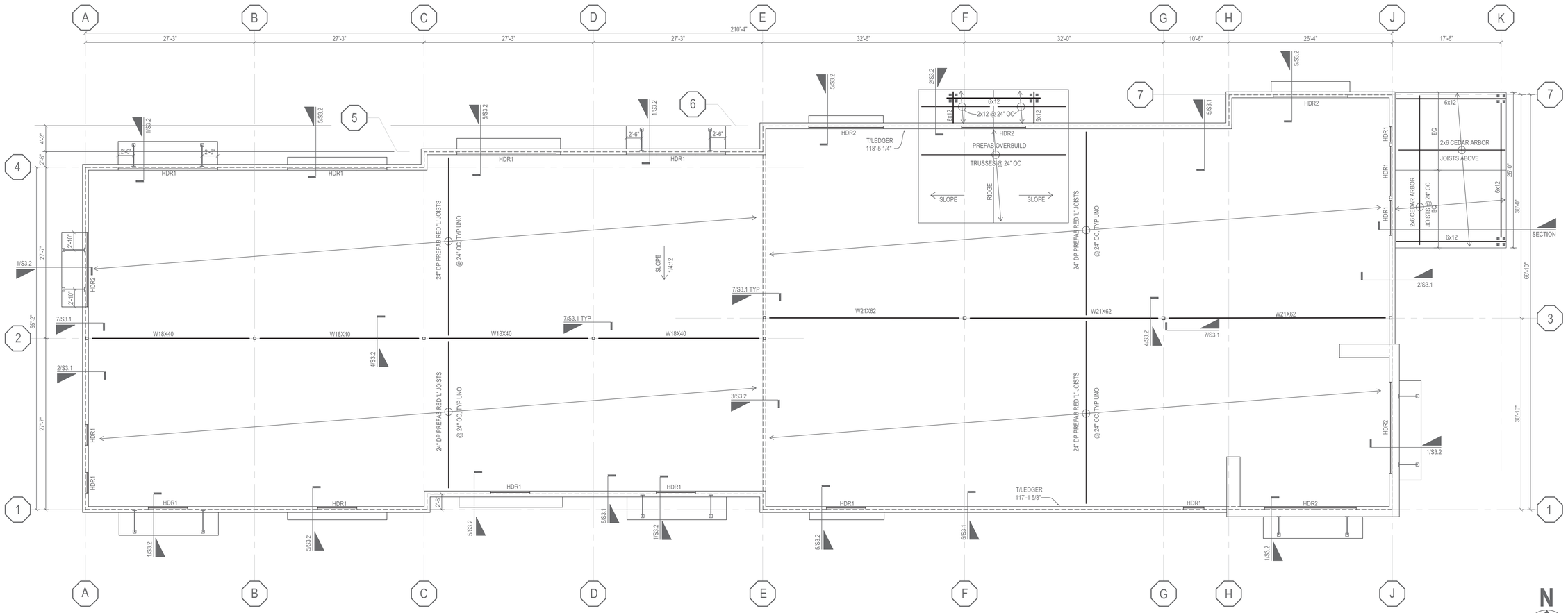

ROOF FRAMING PLAN

SCALE:1/8"=1'-0" (1)

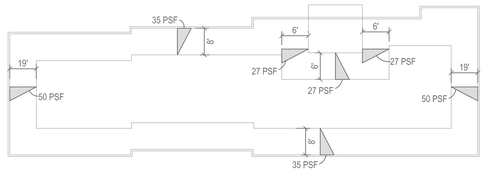

NOTE:

SNOW LOADS INDICATED ARE IN ADDITION TO FLAT ROOF SNOW LOAD

SNOW DRIFT LOAD PLAN

SCALE:1/8"=1'-0" (2)

HEADER SCHEDULE			
TYPE	SIZE	JAMB	
		TRIMMER	KING
HDR 1	GL 3 1/8x 16.5	(2) 2x6	(3) 2x6
HDR 2	GL 3 1/8x 12	(2) 2x6	(3) 2x6
HDR 3	GL 3 1/8x 7 1/2	(2) 2x6	(2) 2x6

NOTES:

1. NAIL ALL JAMB STUDS TOGETHER W/ (2) ROWS OF 10d NAILS @ 12" OC, STAGGERED.

2. REFERENCE 7/S3.2 FOR STANDARD HEADER FRAMING.

ROOF FRAMING PLAN NOTES:

1. FOR STRUCTURAL GENERAL NOTES, DESIGN CRITERIA, AND ABBREVIATIONS, REFERENCE S1.0 AND S1.1.

2. VERIFY LOCATIONS OF COLUMNS, WALLS, OPENINGS, ETC. WITH ARCHITECTURAL DRAWINGS. VERIFY ALL WALL, FLOOR, AND ROOF ELEVATIONS WITH ARCHITECTS DRAWINGS.

3. COORDINATE FRAMING WITH ALL MECHANICAL, HVAC, SPRINKLER, PLUMBING, AND ELECTRICAL DRAWINGS.

4. PROVIDE SOLID BLOCKING BETWEEN JOISTS/TRUSSES OVER ALL BEARING WALLS AND SHEAR WALLS.

5. ALL JOIST HANGERS SHALL BE SIMPSON TOP PLATE BEARING TYPE. GLULAM HANGERS SHALL BE SIMPSON EG TYPE UNLESS NOTED OTHERWISE ON PLAN. ENGINEERED TRUSS HANGERS SHALL BE DESIGNED AND SUPPLIED BY THE TRUSS SUPPLIER.

6. ALL HEADERS SHALL BE PER PLAN. ALL HEADER AND BEAM SUPPORTS SHALL BE CONTINUOUS TO THE FOUNDATION.

7. PROVIDE JOIST/TRUSS BRIDGING PER MANUFACTURERS REQUIREMENTS FOR ALL ENGINEERED JOISTS AND TRUSSES.

8. JOISTS/TRUSSES SHALL BE BIDDER DESIGNED IN ACCORDANCE WITH THE STRUCTURAL GENERAL NOTES. JOIST/TRUSS SHALL BE DESIGNED FOR ADDITIONAL MECHANICAL, ELECTRICAL, AND PLUMBING LOADS, INCLUDING BUT NOT LIMITED TO MECHANICAL UNIT AND SPRINKLER LOADS. JOIST/TRUSS SHALL BE DESIGNED FOR SNOW DRIFT LOADING AS INDICATED ON THE SNOW DRIFT LOADING PLAN, IN ADDITION TO THE UNIFORM SNOW LOAD SPECIFIED IN THE STRUCTURAL GENERAL NOTES.

9. PROVIDE MINIMUM SIMPSON H2.5A HURRICANE TIES AT ALL ROOF JOISTS/TRUSSES UNLESS HEAVIER TIES ARE INDICATED ON PLAN.

10. SHEATHING SHALL BE AS FOLLOWS:

ROOF SHEATHING			
SIZE	EDGE NAILING	FIELD NAILING	SPAN RATING
19/32"	Ø0.131 X 2 1/2" @ 6" OC	Ø0.131 X 2 1/2" @ 12" OC	32/16

NOTES:
1. ALL SHEATHING SHALL BE APA-RATED.
2. LAY SHEATHING WITH FACE GRAIN PERPENDICULAR TO SUPPORTS.
3. STAGGER ALL SHEATHING PANEL END JOINTS.
4. PROVIDE 1/8" GAP BETWEEN PANEL ENDS AND EDGES.

11. PROVIDE DOUBLE JOISTS/TRUSSES AROUND OPENINGS GREATER THAN 24" ON ONE SIDE.

12. CONTRACTOR IS RESPONSIBLE FOR ALL TEMPORARY BRACING/ STABILITY OF SYSTEM DUE TO CONSTRUCTION LOADS.

13. TYPICAL DETAILS PER:

4/S3.1	TYPICAL SHEAR WALL ELEVATION
8/S3.2	TYPICAL PLATE SPLICE DETAIL

No.	REVISIONS/SUBMISSIONS	Date

Reviewed REVIEWER
CAD File No. FILE
Drawn DRAFTER
Checked CHECKER

Seal

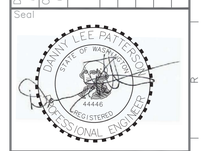

THE CONTRACTOR SHALL CHECK AND VERIFY ALL ASPECTS OF THE WORK AND REPORT ERRORS AND OR OMISSIONS TO THE ARCHITECT PRIOR TO COMMENCING WORK. ALL CONSTRUCTION SHALL CONFORM TO CODES AND ORDINANCES, LOCAL AND NATIONAL, IN EFFECT AT THE TIME OF CONSTRUCTION. DRAWINGS ARE DIAGRAMMATIC IN NATURE, AND DO NOT PURPORT TO REPRESENT ALL ITEMS REQUIRED FOR COMPLETION OF THE WORK. DRAWINGS SHALL NOT BE SCALED.

KUNPENG LLC
RETAIL SHELL BUILDING
LIBERTY LAKE, WASHINGTON

Drawing Title: ROOF PLAN

Submittal Date: 9/20/2016

Project No.

Scale

Drawing No.

S2.1

NO. of SET

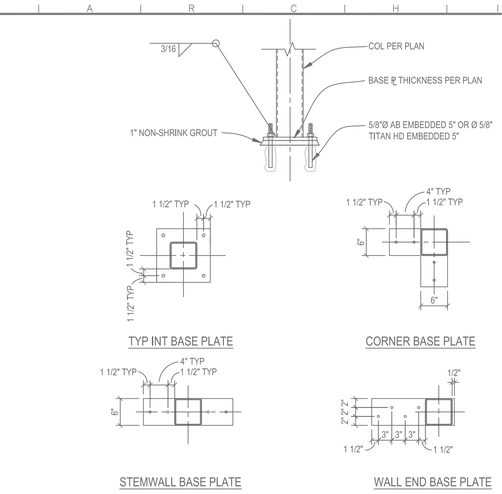

STANDARD BASE PLATE CONFIGURATIONS

3A-011 SCALE:3/4"=1'-0" 10

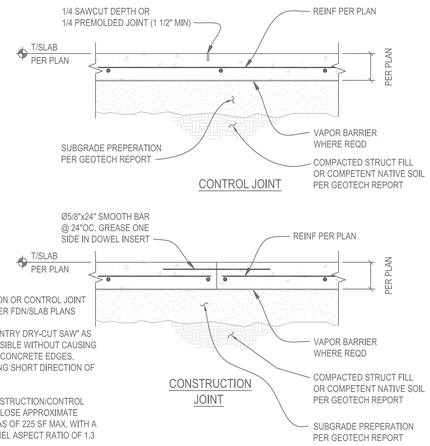

NOTES:

1. CONSTRUCTION OR CONTROL JOINT LOCATIONS PER FDN/SLAB PLANS
2. USE "EARLY ENTRY DRY-CUT SAW" AS SOON AS POSSIBLE WITHOUT CAUSING RAVELING OF CONCRETE EDGES. SAWCUT ALONG SHORT DIRECTION OF POUR FIRST.
3. PROVIDE CONSTRUCTION/CONTROL JOINT TO ENCLOSE APPROXIMATE SQUARE AREAS OF 225 SF MAX. WITH A MAXIMUM PANEL ASPECT RATIO OF 1.3 TO 1.0

STANDARD SLAB ON GRADE JOINT DETAILS WITH REINFORCING

3A-003 SCALE:3/4"=1'-0" 7

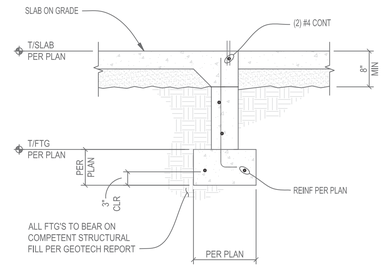

NOTES:

1. REF 3/S3.0 FOR INFO. NOT SHOWN.

EXTERIOR FOOTING AT OPENINGS

SCALE:3/4"=1'-0" 4

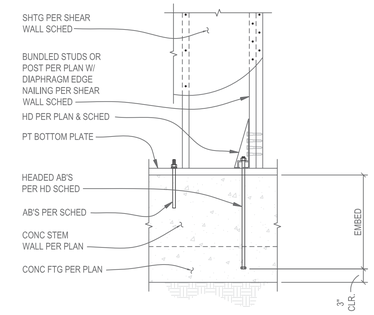

AT PHD & HDQ HOLD-DOWNS

TYPICAL HOLD DOWN AT FOUNDATION/CONCRETE STEM WALL

6B-003M SCALE:3/4"=1'-0" 1

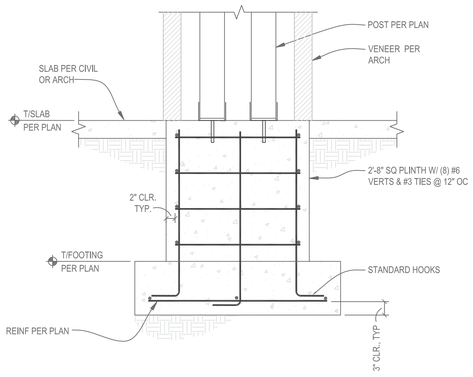

EXTERIOR ISOLATED COLUMN FOOTING

SCALE:3/4"=1'-0" 11

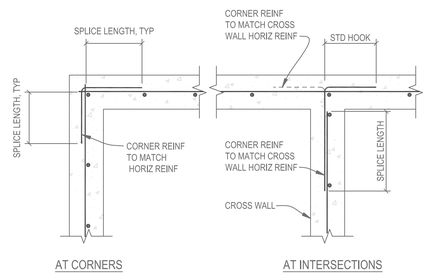

NOTES:

1. SPLICE LENGTHS PER REINFORCING LAP SPLICE AND DEVELOPMENT LENGTH SCHEDULE FOR CONCRETE.
2. WALL REINFORCING PER PLAN OR ELEVATIONS, SECTIONS AND DETAILS.
3. CORNER REINFORCING AT FOOTING AND STEM WALLS TO MATCH FOOTING AND STEM WALL HORIZONTAL REINFORCING.

TYPICAL EXTERIOR WALL FOOTING (1 ROW)

3A-004 SCALE:3/4"=1'-0" 8

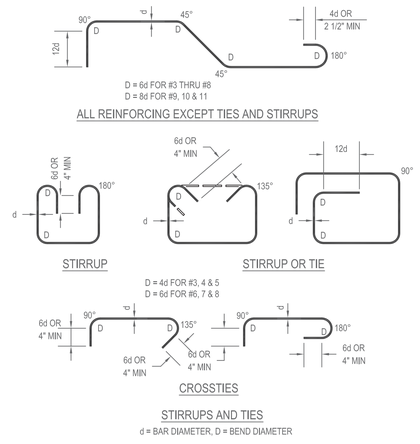

STANDARD HOOKS AND BENDS - BEAM STIRRUPS AND COLUMN TIES

3A-001 SCALE:1/2"=1'-0" 5

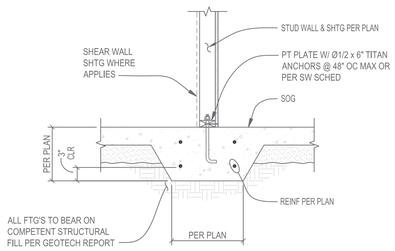

NOTE:

COLD JOINT BETWEEN FOOTING AND SLAB NOT PERMITTED.

THICKENED SLAB UNDER BEARING WALL

6C-011 SCALE:3/4"=1'-0" 2

BAR SIZE, INCH-POUND (METRIC)	LAP CLASS	LENGTHS (IN.) PER CONCRETE STRENGTH				
		3000 PSI (21 MPa)				
		TOP BARS		OTHER BARS		STANDARD
		CASE 1	CASE 2	CASE 1	CASE 2	HOOKS
#3 (#10)	A	22	32	17	25	9
	B	28	42	22	32	
#4 (#13)	A	29	43	22	33	11
	B	37	56	29	43	
#5 (#16)	A	36	54	28	41	14
	B	47	70	36	54	
#6 (#19)	A	43	64	33	50	17
	B	56	84	43	64	

NOTES:

1. TABULATED VALUES ARE BASED ON GRADE 60 (420) REINFORCING BARS AND NORMAL WEIGHT CONCRETE. LENGTHS ARE IN INCHES.
2. TENSION DEVELOPMENT LENGTHS AND TENSION LAP-SPLICE LENGTHS ARE CALCULATED PER ACI 318 (318M) SECTIONS 12.2.2 AND 12.15, RESPECTIVELY. TABULATED VALUES FOR BEAMS OR COLUMNS ARE BASED ON TRANSVERSE REINFORCEMENT AND CONCRETE COVER MEETING MINIMUM CODE REQUIREMENTS.
3. CASES 1 AND 2, WHICH DEPEND ON THE TYPE OF STRUCTURAL ELEMENT, CONCRETE COVER, AND CENTER-TO-CENTER SPACING OF THE BARS, ARE DEFINED AS: BEAMS OR COLUMNS: CASE 1 - COVER AT LEAST 1.0 db AND CENTER-TO -CENTER SPACING AT LEAST 2.0 db AND CASE 2- COVER LESS THAN 1.0 db OR CENTER-TO-CENTER SPACING LESS THAN .0 db. ALL: CASE 1 - COVER AT LEAST 1.0 db AND CENTER-TO-CENTER SPACING AT LEAST 3.0 db. OTHERS: CASE 2 - COVER LESS THAN 1.0 db OR CENTER-TO-CENTER SPACING LESS THAN 3.0 db.
4. LAP SPLICE LENGTHS ARE MULTIPLIES OF TENSION DEVELOPMENT LENGTHS; CLASS A= 1.0 ld AND CLASS B=1.3 ld(ACI 318[318M], SECTION 12.15.1)
5. ACI 318 (318M) DOES NOT ALLOW TENSION LAP SPLICES OF #14 (#43) OR #18 (#57) BARS. THE TABULATED VALUES FOR THOSE BAR SIZES ARE THE TENSION DEVELOPMENT LENGTHS.
6. TOP BARS ARE HORIZONTAL BARS WITH MORE THAN 12 in. (300mm) OF CONCRETE CAST BELOW THE BARS.
7. FOR LIGHTWEIGHT-AGGREGATE CONCRETE, MULTIPLY THE TABULATED VALUES BY 1.3.

REBAR TENSION LAP SPLICE SCHEDULE

6D-004 SCALE:NTS 12

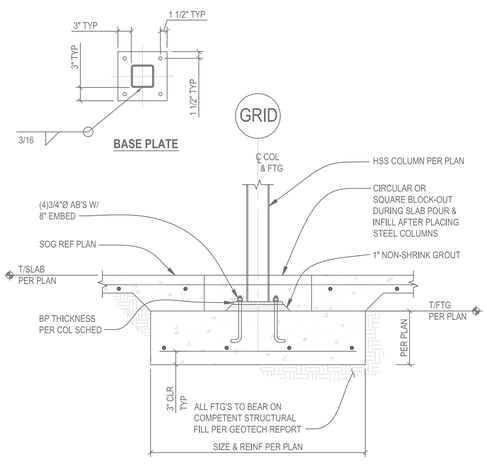

TYPICAL SPREAD FOOTING DETAIL

SCALE:3/4"=1'-0" 9

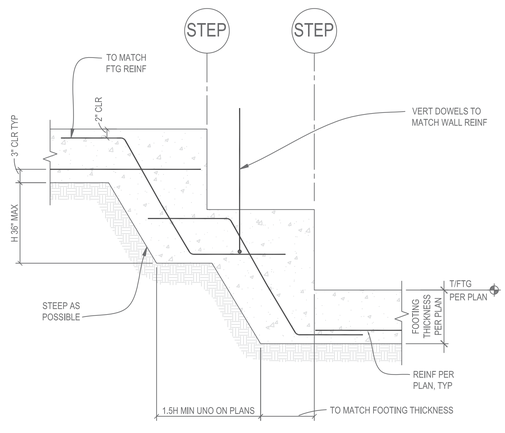

STANDARD STEEPED FOOTING DETAIL

3A-002 SCALE:3/4"=1'-0" 6

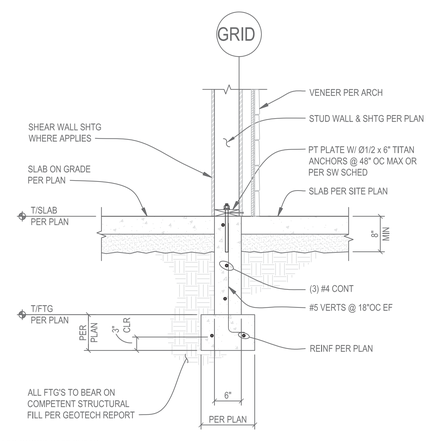

NOTE:

CONTRACTOR TO COORDINATE SHEAR WALL INSPECTION REQUIREMENTS.

TYPICAL EXTERIOR FOOTING

6D-002M SCALE:3/4"=1'-0" 3

No.	REVISIONS/SUBMISSIONS	Date

Drawn | Checked | Reviewed | CAD File No.

Seal

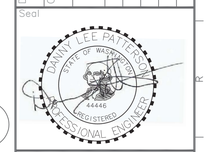

THE CONTRACTOR SHALL CHECK AND VERIFY ALL ASPECTS OF THE WORK AND REPORT ERRORS AND OR OMISSIONS TO THE ARCHITECT PRIOR TO COMMENCING WORK. ALL CONSTRUCTION SHALL CONFORM TO CODES AND ORDINANCES, LOCAL AND NATIONAL, IN EFFECT AT THE TIME OF CONSTRUCTION. DRAWINGS ARE DIAGRAMMATIC IN NATURE, AND DO NOT PURPORT TO REPRESENT ALL ITEMS REQUIRED FOR COMPLETION OF THE WORK. DRAWINGS SHALL NOT BE SCALED.

KUNPENG LLC
RETAIL SHELL BUILDING
LIBERTY LAKE, WASHINGTON

Drawing Title: DETAILS

Submittal | Date: 9/20/2016 | Scale | Project No.

Drawing No.

S3.0

NO. of SET

A R C H I T E C T U R E & P L A N N I N G

BOLTED SHEAR PLATE CONNECTION - SCHEDULE "A"									
3/4" Ø	A325-N	SINGLE ROW		BEAM Fy - 50ksi - CONNECTION PLATE Fy = 36ksi					
BEAM SIZE	"N" BOLTS REQUIRED[1]	MIN SHEAR PLATE OR WT WEB THICKNESS	MIN HSS COLUMN WALL THICKNESS[10]	WELD SIZE t[7]	MAX SINGLE COPE DEPTH[9]	MAX DOUBLE COPE DEPTH[9]	CONNECTION CAPACITY - ASD[3] (kips) UNCOPED	COPED SINGLE	COPED DOUBLE
W8	2	1/4"	1/4"	3/16"	1 1/4"	NR[11]	16.2	7.6	NR[11]
W10	2	1/4"	1/4"	3/16"	2 1/2"	1 1/4"	16.3	11.0	11.0
W12	3	5/16"	1/4"	1/4"	2 1/2"	1 1/2"	31.8	31.2	23.9
W14	3	5/16"	1/4"	1/4"	2 1/2"	1 1/2"	31.8	31.2	23.9
W16	4	5/16"	1/4"	1/4"	2 1/2"	1 1/2"	42.4	42.4	36.6
W18	5	5/16"	5/16"	1/4"	2 1/2"	1 1/2"	53.0	*EQUAL TO UNCOPED CAPACITY*	*EQUAL TO UNCOPED CAPACITY*
W21	6	3/8"	5/16"	5/16"	2 1/2"	1 1/2"	63.6		
W24	7	3/8"	5/16"	5/16"	2 1/2"	1 1/2"	74.2		
W27	8	3/8"	3/8"	5/16"	2 1/2"	NR[11]	84.8		*NR[11]*
W30	8	7/16"	3/8"	5/16"	2 1/2"	NR[11]	84.8		*NR[11]*
W33	9	7/16"	1/2"	5/16"	2 1/2"	NR[11]	95.4		*NR[11]*
W36	10	7/16"	1/2"	5/16"	2 1/2"	NR[11]	103.2		*NR[11]*

BOLTED SINGLE ROW SHEAR PLATE CONNECTION NOTES:

1. PROVIDE EITHER STANDARD OR HORIZONTAL SHORT SLOTTED HOLES AS PERMITTED BY AISC J3.2 IN THE BEAM WEB AND/OR THE SHEAR PLATE.
2. WHERE SHORT-SLOTTED HOLES ARE USED, PROVIDE HARDENED WASHERS PER AISC J3.2.
3. CAPACITIES BASED ON AISC 13TH EDITION WITH ASTM A325-N BOLTS.
4. HORIZONTAL DISTANCE FROM SUPPORT FACE TO CENTERLINE OF BOLT GROUP SHALL BE AS SHOWN IN THE DETAILS, BUT SHALL NOT EXCEED 3 1/2" IN THE AS-BUILT CONDITION. SUPPORT FACE FOR TEE IS THE INSIDE FACE OF FLANGE.
5. VERTICAL EDGE DISTANCE FROM BOLT CENTERLINE TO EDGE OF STEEL SHALL BE 1 1/2" TYPICALLY, EXCEPT THAT 1 1/4" IS PERMITTED PER AISC TABLE J3.4 FOR 3/4" DIAMETER BOLTS WITHOUT ANY REDUCTION IN THE TABULATED CAPACITIES.
6. GAP BETWEEN BEAM END AND SUPPORT FACE SHALL BE 1/2" EXCEPT FOR "WT" CONNECTORS USED WITH HSS COLUMNS. WHERE "WT" ARE USED AS SHEAR TAB ELEMENTS, THE GAP BETWEEN FACE OF COLUMN AND END OF BEAM SHALL NOT EXCEED THE LESSER OF 1 1/2" OR THE "k" DISTANCE OF THE "WT" PLUS 1/4".
7. WELD SIZES SHALL BE THE LARGER OF THE SIZE (t), TABULATED IN SCHEDULE "A" OR MINIMUM SHOWN IN TABLE 1.
8. FIELD FILLET WELDS SHALL BE SIZED TO BE AT LEAST 1/8" LARGER THAN THE WELD SIZE SHOWN IN SCHEDULE "A", UNLESS PROPER FIT-UP IS VERIFIED BY A SPECIAL INSPECTOR PRIOR TO WELDING.
9. COPE DEPTHS (SINGLE AND DOUBLE) SHALL NOT EXCEED THE LESSER OF THOSE SHOWN IN SCHEDULE "A", NOR AS ALLOWED BY BOLT HOLE SPACING AND MINIMUM EDGE DISTANCE REQUIREMENTS. SINGLE COPE LENGTH SHALL NOT EXCEED 6 1/2". DOUBLE COPE LENGTHS SHALL NOT EXCEED THAT REQUIRED TO ACCOMMODATE GIRDER FLANGE + 1/2" MAX GAP BETWEEN FLANGES.
10. UNCOPED CAPACITIES OF WT CONNECTIONS ARE VALID WITH MINIMUM NOMINAL HSS COLUMN WALL THICKNESSES TABULATED. THE EFFECTIVE THROAT OF FLARE BEVEL GROOVE WELDS IS BASED ON OUTSIDE RADIUS OF HSS, AND IS TAKEN AS 5/8 TIMES THE HSS WALL THICKNESS BASED ON AWS D1.1, TABLE 2.1. WHEN 3/4" A325-N BOLTS ARE USED, A 3/16" HSS COLUMN WALL THICKNESS IS PERMITTED WITH A 20% REDUCTION OF THE WT CONNECTION CAPACITY.
11. NR = NOT RECOMMENDED. DOUBLE COPES FOR THESE BEAMS ARE RESTRICTED BY CONNECTION GEOMETRY AND/OR LARGE REDUCTIONS IN SHEAR CAPACITY. DOUBLE COPES ARE POSSIBLE, BUT CAPACITIES MUST BE CALCULATED FOR SPECIFIC BEAM AND GIRDER GEOMETRIES AND MUST BE DETAILED SEPARATELY.

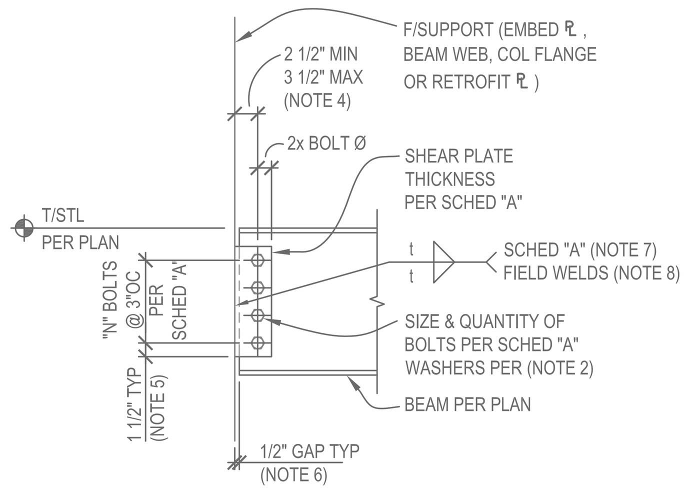

TYPICAL SHEAR PLATE CONNECTION

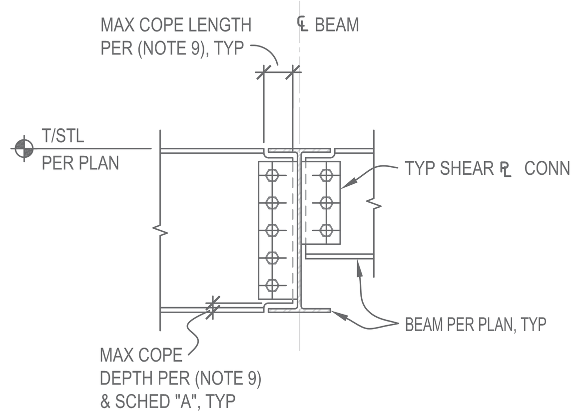

NOTE:
FOR SHEAR PLATE INFORMATION, REFERENCE TYPICAL SHEAR PLATE CONNECTION.

BEAM TO BEAM CONNECTION

TABLE 1 MINIMUM WELD SIZE TABLE	
PLATE OR FLANGE THICKNESS *	MINIMUM FILLET SIZE
3/8", 1/2"	3/16"
5/8", 3/4"	1/4"
> = 7/8"	5/16"

* MINIMUM WELD SIZE TO BE BASED ON THICKNESS OF THE THICKER PART.

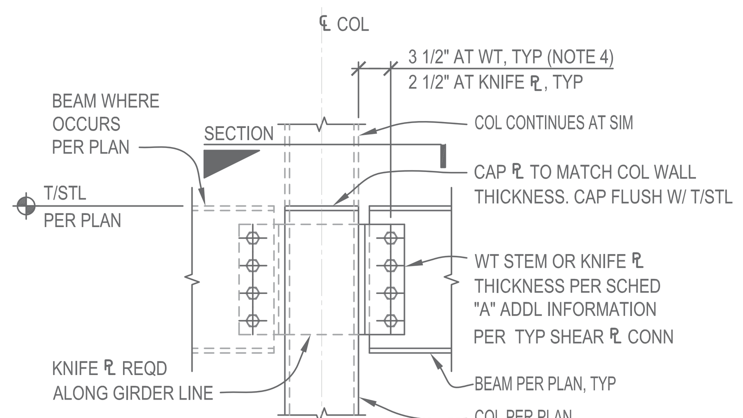

NOTE:
FOR SHEAR PLATE INFORMATION, REFERENCE TYPICAL SHEAR PLATE CONNECTION.

BEAM TO HSS OR PIPE COLUMN

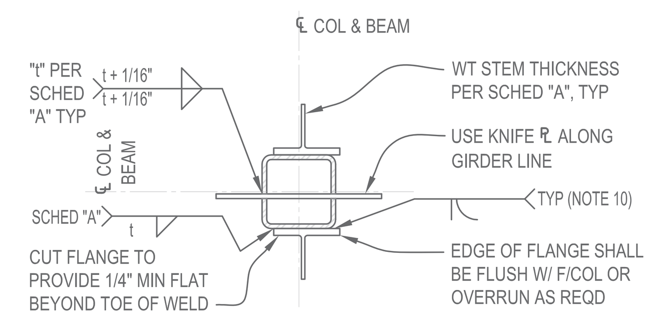

TYPICAL SECTION AT INTERIOR COLUMN

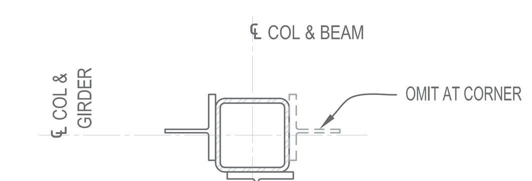

NOTE:
FOR ADDITIONAL INFORMATION, REFERENCE TYPICAL SECTION.

TYPICAL SECTION AT CORNERS AND 3-SIDED CONDITIONS

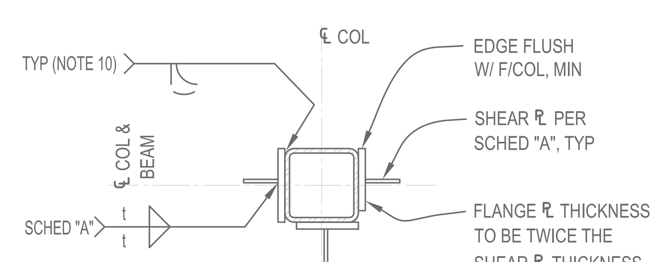

NOTE:
FOR ADDITIONAL INFORMATION, REFERENCE TYPICAL SECTION.

ALTERNATE SECTION WITH TEES BUILT-UP FROM PLATES

BOLTED SINGLE SHEAR PLATE (SINGLE ROW) CONNECTIONS
5A-001M SCALE:3/4"=1'-0" 6

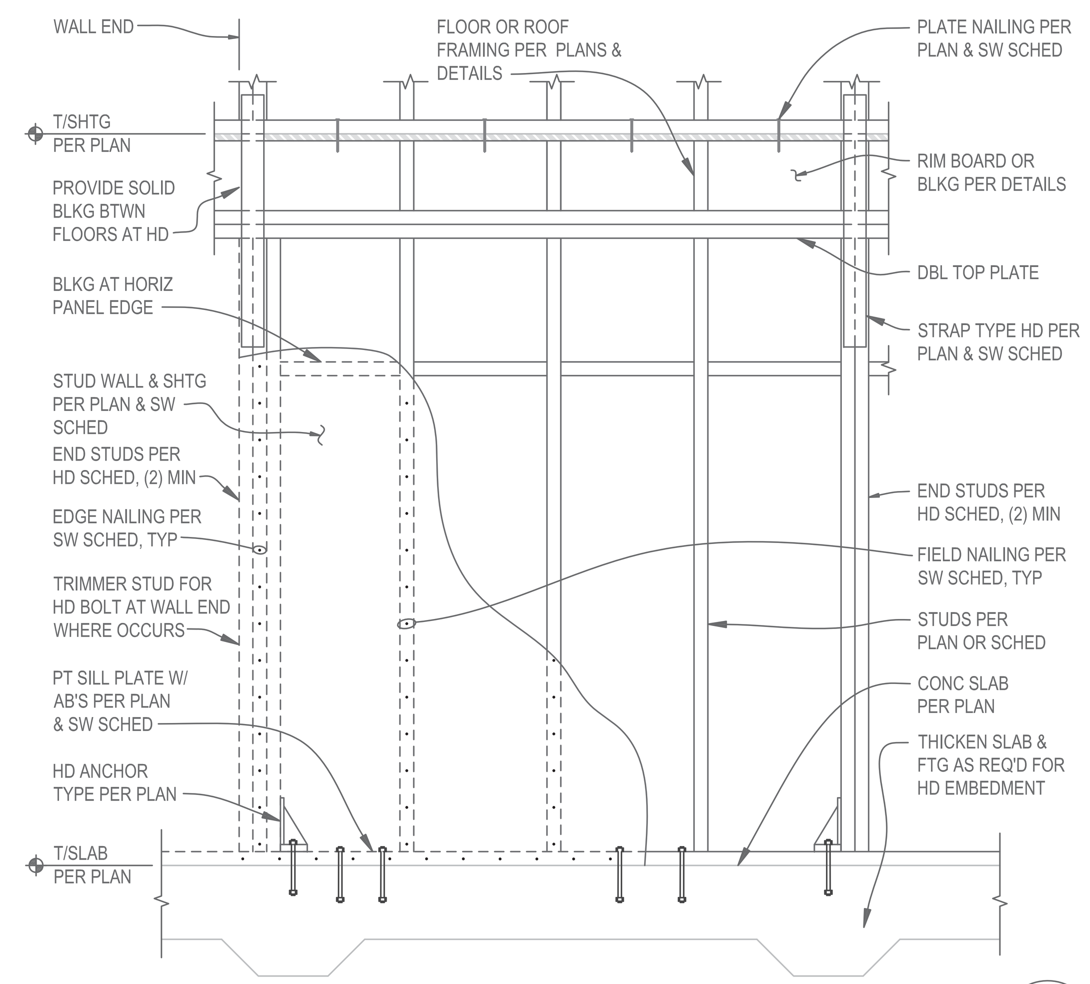

TYPICAL SHEAR WALL ELEVATION
6A-009M SCALE:3/4"=1'-0" 4

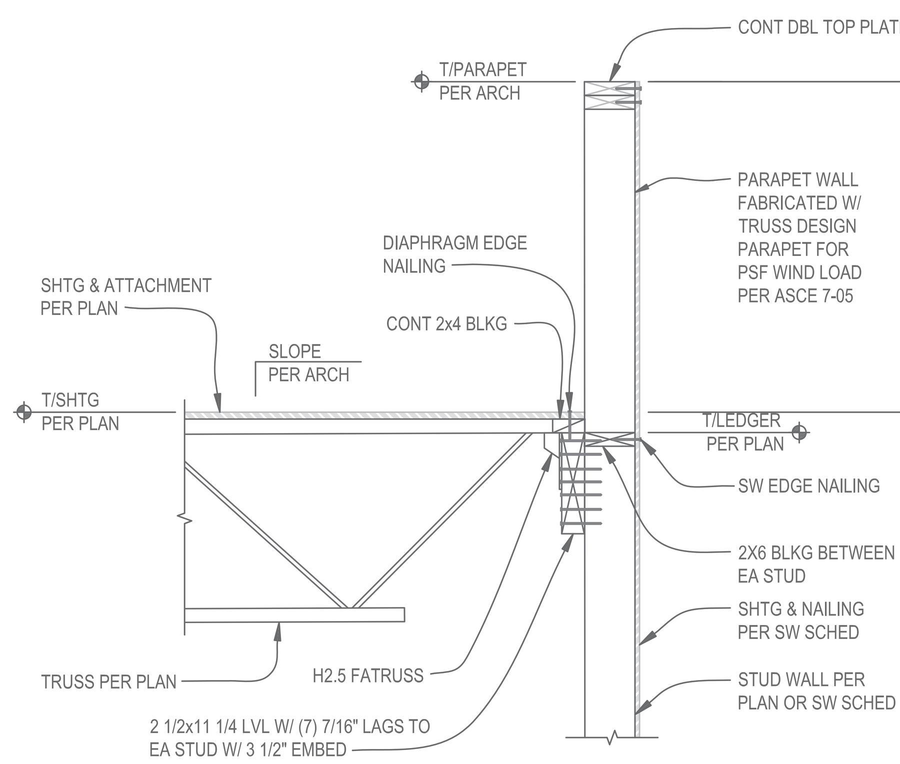

NOTE:
PROVIDE DOUBLE STUDS AT PARAPETS OVER FOUR FEET HIGH.

EXTERIOR WALL PERPENDICAULAR TO TRUSS AT PARAPET
6B-011M SCALE:3/4"=1'-0" 5

HOLD-DOWN ANCHOR SCHEDULE [1,2,3]					
TYPE	MIN STUD QTY [4]	FASTENERS TO WOOD FRAMING	ANCHOR DIAMETER [5]	ALLOWABLE TENSION LOAD (lb) [6] DF/SP	SPF/HF
DTT2Z	(2) 2x	(8) SDS Ø1/4"x1 1/2"	Ø1/2"	1825	1800
DTT2Z-SDS2.5 [7]	(2) 2x	(8) SDS Ø1/4"x2 1/2"		2145	2105
HDU2	(2) 2x	(6) SDS Ø1/4"x2 1/2"	Ø5/8"	3075	2215
HDU4	(2) 2x	(10) SDS Ø1/4"x2 1/2"	Ø5/8"	4565	3285
HDU5	(3) 2x4, (2) 2x6	(14) SDS Ø1/4"x2 1/2"	Ø5/8"	5645	4065
HDU8	(3) 2x	(20) SDS Ø1/4"x2 1/2"	Ø7/8"	7870	5665
HDU11	(5) 2x6	(30) SDS Ø1/4"x2 1/2"	Ø1"	11175	8045
HDU14	(6) 2x4, (4) 2x6	(36) SDS Ø1/4"x2 1/2"	Ø1"	14390	10435
HD19 [8]	(7) 2x4, (5) 2x6	(5) Ø1" BOLTS	Ø1 1/4"	19360	15270

NOTES:
1. SOME HOLD-DOWN TYPES NOTED MAY NOT BE USED ON THIS PROJECT.
2. TYPICAL HOLD-DOWN DETAILS PER 1/S3.0 AND 4/S3.3.
3. NAIL LAMINATE MULTIPLE 2x STUDS WITH PLATE NAILING PER SHEAR WALL SCHEDULE.
4. PROVIDE PANEL EDGE NAILING PER SHEAR WALL SCHEDULE AT HOLD DOWN STUDS/POSTS. GREATER STUD QUANTITY MAY BE REQUIRED AT HOLD DOWNS AS NOTED ON PLANS.
5. AT PRESSURE TREATED SILLS, USE HOT DIPPED GALVANIZED BOLTS.
6. ALLOWABLE LOADS HAVE BEEN INCREASED FOR EARTHQUAKE OR WIND LOAD DURATIONS WITH NO FURTHER INCREASE ALLOWED.
7. REQUIRES STANDARD CUT WASHER BE INSTALLED BETWEEN THE NUT AND SEAT.
8. FRAMING BOLTS SHOULD BE SNUGLY TIGHTENED WITH STANDARD CUT WASHERS BETWEEN THE WOOD AND NUT.
9. TYPICAL HOLD-DOWN STRAP INSTALLATION PER TYPICAL STRAP DETAIL.
10. USE HALF THE REQUIRED FASTENERS IN EACH MEMBER BEING CONNECTED TO ACHIEVE THE LISTED LOADS.

HOLD DOWN ANCHOR AND STRAP SCHEDULE
6D-004 SCALE:NTS 1

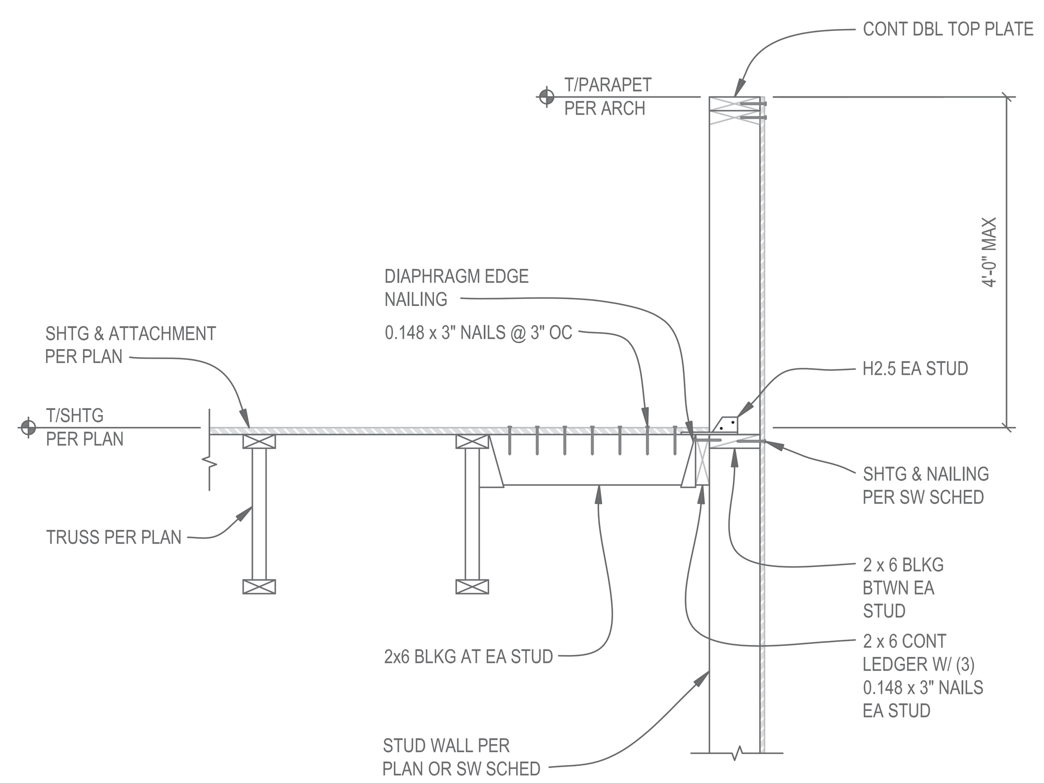

NOTE:
PROVIDE DOUBLE STUDS AT PARAPETS OVER FOUR FEET HIGH.

EXTERIOR WALL PARALLEL TO TRUSS AT PARAPET
6B-010M SCALE:3/4"=1'-0" 2

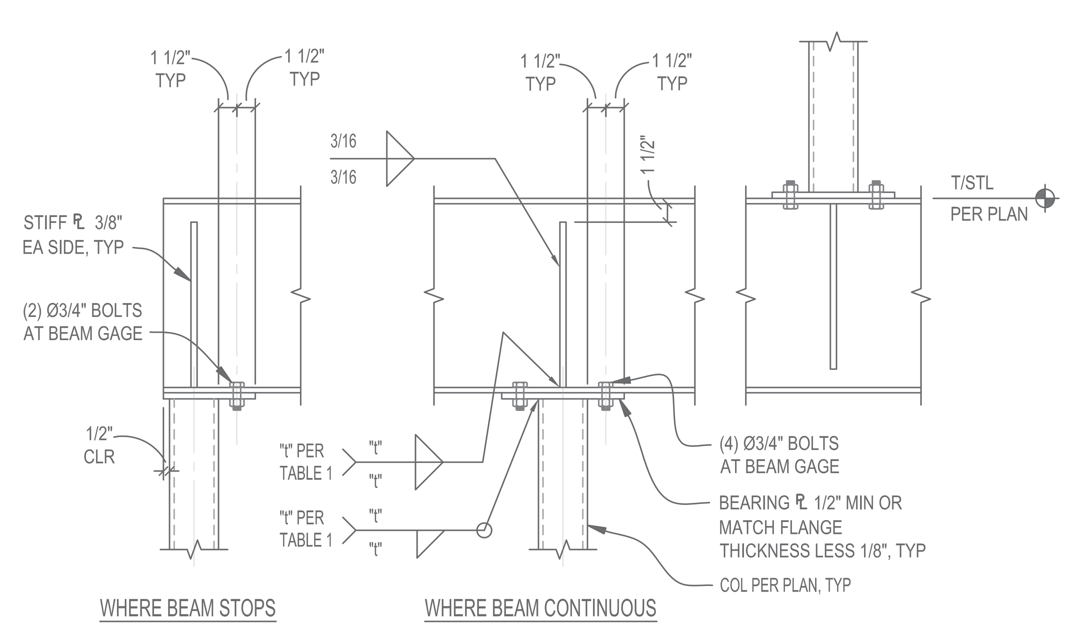

TABLE 1	
*BASE PLATE OR FLANGE THICKNESS	"t" WELD SIZE
3/8", 1/2"	3/16"
5/8", 3/4"	1/4"
> = 7/8"	5/16"

* MINIMUM WELD SIZE TO BE BASED ON THICKER OF BASE ℙ OR COLUMN THICKNESS

WF BEAM TO HSS COLUMN CONNECTION
6D-001 SCALE:1"=1'-0" 7

SHEAR WALL SCHEDULE - Ø0.148" x 2 1/2" NAILS IN SPRUCE-PINE-FIR OR HEM-FIR PER AF&PA SDPWS-2008								
WALL TYPE [1]	APA RATED WALL SHEATHING [2,3,4,5]	NAIL SPACING AT ALL PANEL EDGES [6,7,8,16]	STUD AND BLOCKING SIZE AT ADJOINING PANEL EDGES [9,10]	PLATE TO BLOCKING AND RIM BOARD TO BLOCKING CONNECTION [11,12]	Ø5/8" ANCHOR BOLT SILL PLATE ATTACHMENT AT FOUNDATION [10,13,14,15] 2 x SILL PLATE	3 x SILL PLATE	ALLOWABLE SHEAR CAPACITY LBS/FT	END STUD SIZE
WG4	5/8" GYP	4" OC	2x	6" OC	48" OC	48" OC	145	(2) 2x6
WW6	15/32"	6" OC	2x	6" OC	32" OC	48" OC	400	(2) 2x6
WW4	15/32"	4" OC	2x	4" OC	24" OC	32" OC	593	(3) 2x6
WW3	15/32"	3" OC STAGGERED	3x	3" OC STAGGERED	16" OC	24" OC	772	(3) 2x6

NOTES:
1. SOME SHEAR WALL TYPES MAY NOT BE USED ON THIS PROJECT.
2. INSTALL PANELS EITHER HORIZONTALLY OR VERTICALLY.
3. WHERE SHEATHING IS APPLIED ON EACH FACE OF WALL, PANEL EDGE JOINTS ON 2x FRAMING SHALL BE STAGGERED SO THAT JOINTSON THE OPPOSITE SIDES ARE NOT LOCATED ON THE SAME STUDS. PANEL EDGES ON 3x FRAMING MAY BE LOCATED ON THE SAME STUDS.
4. SHEATHING SHALL BE DIRECTLY APPLIED TO THE FRAMING.
5. 7/16" SHEATHING MAY BE USED WHERE STUDS ARE SPACED AT 16" OC MAXIMUM OR WHERE PANELS ARE INSTALLED WITH LONG DIMENSION ACROSS STUDS.
6. PROVIDE SHEAR WALL SHEATHING AND NAILING FOR THE ENTIRE LENGTH OF THE WALLS DESIGNATED BY WINDOWS, DOORWAYS, OR AS DESIGNATED ON PLANS. HOLD-DOWN REQUIRMENTS PER PLANS AND DETAILS.
7. SHEATHING EDGE NAILING IS REQUIRED AT ALL HOLD-DOWN POST AND MAY ALSO BE REQUIRED TO EACH STUD USED IN BUILT-UP HOLD-DOWN POSTS. ADDITIONAL INFORMATION PER HOLD-DOWN DETAILS.
8. INTERMEDIATE FRAMING TO BE 2x MINIMUM MEMBERS. ATTACH SHEATHING TO INTERMEDIATE FRAMING AT 12" OC WHERE STUDS ARE SPACED AT 16" OC AND Ø0.148"x2 1/2" NAILS AT 6" OC WHERE STUDS ARE SPACED AT 24" OC.
9. BLOCKING IS REQUIRED AT ALL PANEL EDGES.
10. AT ADJOINING PANEL EDGES AND SILL PLATES, (2) 2x STUDS NAILED TOGETHER MAY BE USED IN PLACE OF SINGLE 3x STUD. DOUBLE 2x STUDS SHALL BE CONNECT TOGETHER BY NAILING THE STUDS TOGETHER WITH 3" LONG NAILS OF THE SAME SPACING AND DIAMETER AS THE PLATE NAILING.
11. PLATE TO BLOCKING CONNECTION SHALL USE Ø0.162"x3 1/2" NAILS. RIM BOARD TO BLOCKING CONNECTION SHALL USE Ø0.162"x2 1/2" NAILS.
12. WHERE STAGGERED NAILING PATTERN IS SPECIFIED BLOCKING SHALL BE SOLID 3x MEMBERS WITH SPECIES EQUAL TO SHEAR WALL FRAMING. SPLICED DOUBLE 2x MEMBERS ARE NOT ALLOWED.
13. ANCHOR BOLTS SHALL BE PROVIDED WITH HOT DIPPED GALVANIZED STEEL PLATE WASHERS 0.229" (MIN)x3"x3". THE HOLE IN THE PLATE WASHER MAY BE DIAGONALLY SLOTTED 13/16"x 1 3/4" PROVIDED A STANDARD CUT WSASHER IS PLACED BETWEEN THE PLATE WASHER AND NUT. PLATE WASHER SHALL EXTEND TO WITHIN 1/2" OF THE EDGE OF THE SILL PLATE ON THE SIDE(S) WITH SHEATHING.
14. PRESSURE TREATED MATERIAL CAN CAUSE EXCESSIVE CORROSION IN THE FASTENERS. PROVIDE HOT-DIPPED GALVANIZED (ELECTRO-PLATING IS NOT ACCEPTABLE) NAILS AND CONNECTOR PLATES (FRAMING ANGLES, ETC.) FOR ALL CONNECTORS IN CONTACT WITH PRESSURE TREATED FRAMING MEMBERS. ADDITIONAL INFORMATION PER GENERAL NOTES.
15. CONTACT THE STRUCTURAL ENGINEER OF RECORD FOR POST INSTALLED ALTERNATIVES TO CAST-IN-PLACE ANCHOR BOLTS. SPECIAL INSPECTION MAY BE REQUIRED.
16. AT GYP SHEAR WALLS USE 6d COOLER NAILS OR 0.120" DIA x 1 3/4" NAILS W/ MIN 3/8" HEAD. NAIL SPACING INDICATED IS FOR PANEL EDGES AND IN THE FIELD

SHEAR WALL SCHEDULE
6D-004 SCALE:NTS 3

Date | Reviewed | CAD File No. | Drawn | Checked | No. | REVISIONS/SUBMISSIONS

Seal

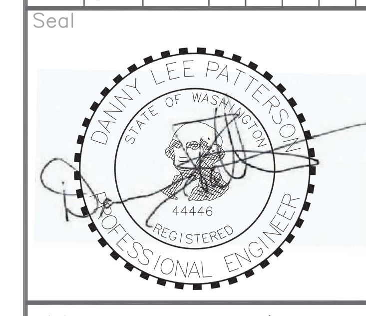

THE CONTRACTOR SHALL CHECK AND VERIFY ALL ASPECTS OF THE WORK, AND REPORT ERRORS AND OR OMISSIONS TO THE ARCHITECT PRIOR TO COMMENCING WORK. ALL CONSTRUCTION SHALL CONFORM TO CODES AND ORDINANCES, LOCAL AND NATIONAL, IN EFFECT AT THE TIME OF CONSTRUCTION. DRAWINGS ARE DIAGRAMMATIC IN NATURE, AND DO NOT PURPORT TO REPRESENT ALL ITEMS REQUIRED FOR COMPLETION OF THE WORK. DRAWINGS SHALL NOT BE SCALED.

KUNPENG LLC
RETAIL SHELL BUILDING
LIBERTY LAKE, WASHINGTON

Drawing Title: DETAILS

Date: 9/20/2016

Scale | Submittal | Project No.

Drawing No. △1

S3.1

NO. of SET

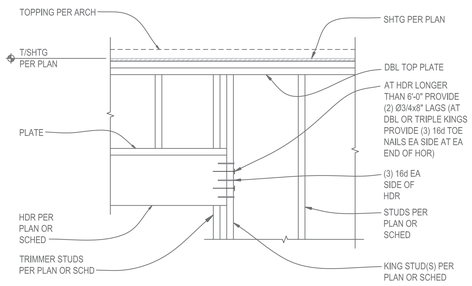

TYPICAL HEADER PERPENDICULAR TO FLOOR FRAMING 7
6A-011M SCALE:3/4"=1'-0"

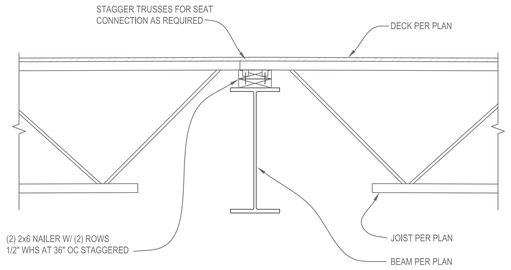

INTERIOR BEAM BEARING DETAIL 4
SCALE:1"=1'-0"

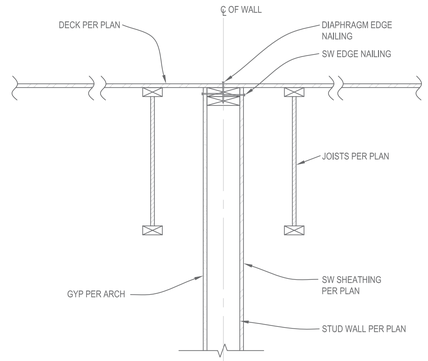

INTERIOR SHEAR WALL AT ROOF 3
SCALE:1"=1'-0"

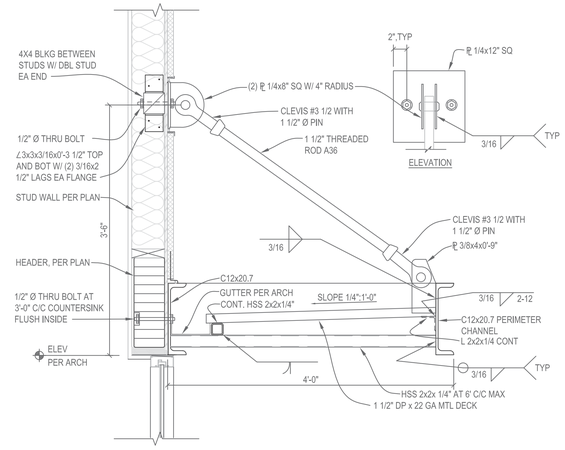

EXTERIOR CANOPY WITH TIE RODS 1
SCALE:1"=1'-0"

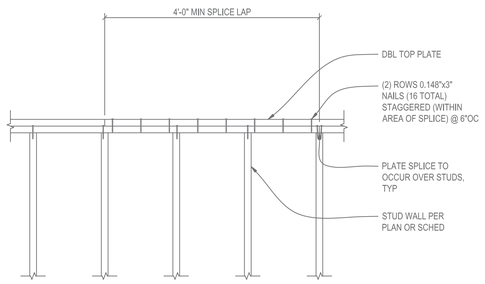

NOTE:
FLOOR/ROOF FRAMING NOT SHOWN FOR CLARITY.

TYPICAL PLATE SPLICE DETAIL 8
6A-003 SCALE:3/4"=1'-0"

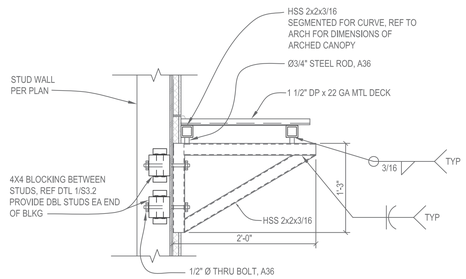

ARCH CANOPY FRAMING 5
SCALE:1"=1'-0"

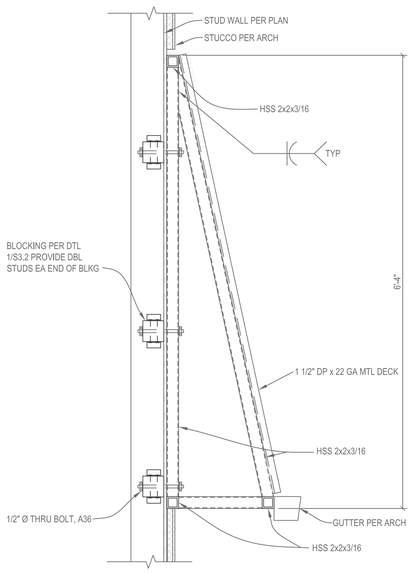

STEEL FRAMED CANOPY 6
SCALE:1"=1'-0"

6

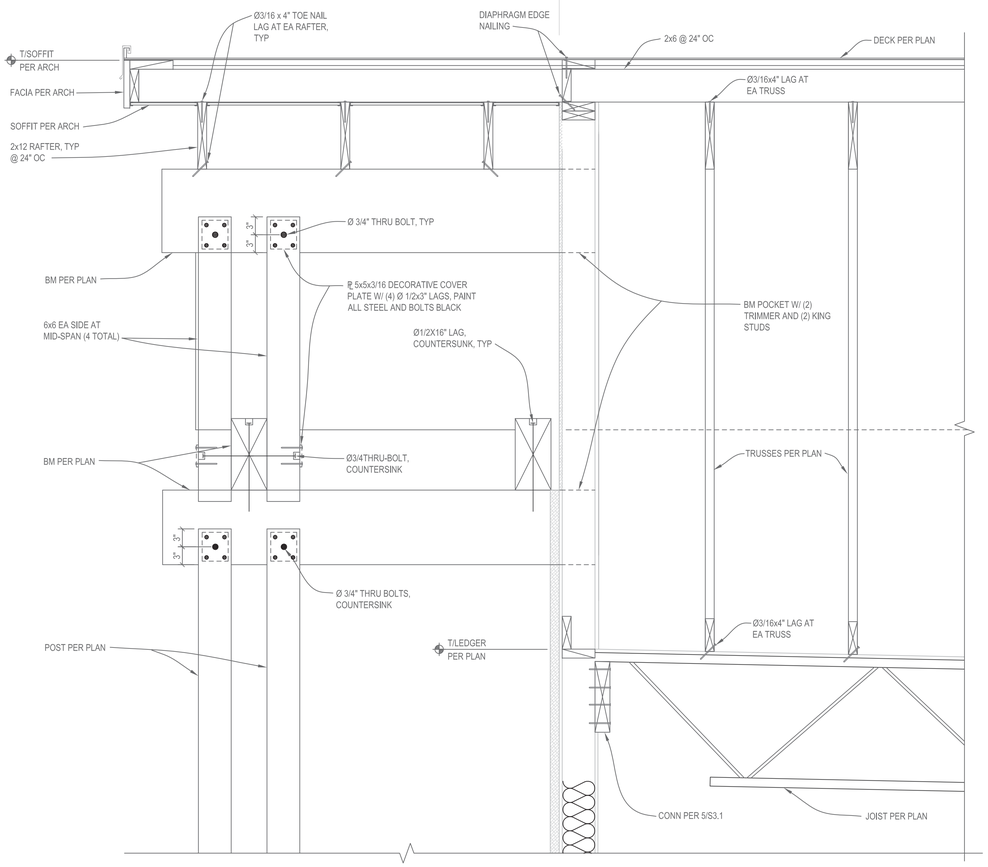

NOTE:
REFERENCE ARCHITECTURAL DRAWINGS FOR ADDITIONAL INFORMATION AT ENTRY AREA.

ENTRY OVERBUILD FRAMING 2
SCALE:1"=1'-0"

No.	REVISIONS/SUBMISSIONS	Date

Reviewed
CAD File No.
Drawn
Checked
Seal

THE CONTRACTOR SHALL CHECK AND VERIFY ALL ASPECTS OF THE WORK AND REPORT ERRORS AND OR OMISSIONS TO THE ARCHITECT PRIOR TO COMMENCING WORK. ALL CONSTRUCTION SHALL CONFORM TO CODES AND ORDINANCES, LOCAL STANDARDS AND PRACTICES AT THE TIME OF CONSTRUCTION. DRAWINGS ARE DIAGRAMMATIC IN NATURE, AND DO NOT PURPORT TO REPRESENT ALL THE WORK REQUIRED FOR COMPLETION OF THE WORK. DRAWINGS SHALL NOT BE SCALED.

KUNPENG LLC
RETAIL SHELL BUILDING
LIBERTY LAKE, WASHINGTON

Drawing Title: DETAILS

Date: 9/20/2016
Scale:
Submittal:
Project No.

Drawing No.
S3.2
NO. of SET

CALLOUTS

1. 6" CONCRETE MOWCURB
2. EXISTING MOWCURB.
3. EXISTING HOME DEPOT SIGN
4. FIRE HYDRANT
5. EXISTING BRICK SIGN WITH LANDSCAPING
6. EXISTING ARBORVITAE.
7. EXISTING LANDSCAPE AND SIDEWALK.

LEGEND

- TURF
- EXISTING WALK
- LIGHT POST
- EXISTING TREE, TYP. PRESERVE AND PROTECT.

PLANT CALLOUTS

XX — PLANT ABBREVIATION
— NUMBER OF PLANTS
EX — EXISTING

PLANTING NOTES

1. TREES AND SHRUBS TO MEET REQUIREMENTS OF AMERICAN STANDARD FOR NURSERY STOCK FOR SIZE AND MATERIAL CONDITION.
2. ALL SHRUB BEDS TO RECEIVE 6" OF TYPE B APPROVED PLANTING SOIL WITH PRE-EMERGENT.
3. INSTALL 2" OF ROCK MULCH IN ALL SHRUB BEDS.
4. ALL TURF AREAS TO RECEIVE 4" OF TYPE A PLANTING SOIL PRIOR TO SEEDING. TILL INTO EXISTING SOIL.
5. TREE LOCATIONS MAY VARY DEPENDING ON WALK, DRIVEWAY, AND UTILITY LOCATIONS.
6. DO NOT COMPACT BOTTOMS OF SWALES, PROTECT SWALES FROM CONSTRUCTION TRAFFIC AND DEBRIS.
7. LANDSCAPE BERM 2'-3' TALL WITH 4:1 MAXIMUM SIDE SLOPES.
8. ALL TREES TO BE SINGLE TRUNKED, UNLESS OTHERWISE NOTED. MULTI-TRUNKED TREES TO INCLUDE MAIN LEADER EQUAL OR GREATER TO SIZE SPECIFIED.
9. FINISH GRADE TO BE: PLANTING AREAS: 2" BELOW ADJACENT WALKS OR HARDSCAPE ELEMENTS.
10. TREES SHALL BE MATCHED FROM SAME LOT.
11. ALL SHRUB AREAS, INCLUDING BUFFER AREAS TO BE IRRIGATED WITH DRIP IRRIGATION. INSTALL 2 X 1 GPH BUBBLERS PER SHRUB, 3 X 1 GPH BUBBLERS PER TREE.

CONSTRUCTION NOTES

1. CALL 811 TO LOCATE UTILITIES PRIOR TO ANY EXCAVATION OR CONSTRUCTION.
2. ALL TOPSOIL ON SITE TO STOCKPILED ON SITE FOR REUSE IN TURF AND SHRUB AREAS.
3. CONTRACTOR IS RESPONSIBLE FOR VERIFYING CONDITIONS IN THE FIELD PRIOR TO CONSTRUCTION AND NOTIFYING THE OWNER AND OWNERS REPRESENTATIVES OF DISCREPANCIES.
4. PRESERVE AND PROTECT ALL IMPROVEMENTS TO REMAIN.
5. THE CONTRACTOR SHALL PROVIDE ALL LABOR, MATERIALS, TRANSPORTATION, AND SERVICES NECESSARY TO COMPLETE THE CONSTRUCTION SHOWN ON THE DRAWINGS.
6. PRESERVE AND PROTECT EXISTING HARDSCAPE TO REMAIN.

IRRIGATION NOTES:

1. LANDSCAPE TO BE INSTALLED WITH AUTOMATIC IRRIGATION SYSTEM WITH AN AUTOMATIC CONTROLLER, CONTROL VALVES AND ASSOCIATED EQUIPMENT.
2. ALL TURF AREAS TO BE IRRIGATED AN OVERHEAD SPRAY, AUTOMATIC IRRIGATION SYSTEM WITH RAIN BIRD ROTARY NOZZLES OR APPROVED EQUAL.
3. ALL SHRUB AREAS SHALL BE IRRIGATED WITH DRIP IRRIGATION. INSTALL 3 EMITTERS PER SHRUB, 4 EMITTERS PER TREE. EMITTERS TO BE RAINBIRD PC-10. ALL TURF AREAS SHALL BE IRRIGATED WITH OVERHEAD SPRAYS. SHRUB AND TURF AREAS SHALL BE ON SEPARATE IRRIGATION ZONES.
4. PROVIDE INLINE FILTER WHEN WATER SOURCE IS FROM LOCAL IRRIGATION SYSTEM. VALVE AND FILTER TO BE RAIN BIRD MEDIUM FLOW | COMMERCIAL RECLAIMED WATER ZONE KIT WITH PRESSURE REGULATING BASKET FILTER, 200 MESH SCREEN OR APPROVED EQUAL.
5. ALL IRRIGATION EQUIPMENT CONNECTED TO WATER FROM LOCAL IRRIGATION DISTRICT TO RECEIVE RECLAIMED WATER KITS AND OR MARKINGS.
6. ALL MAINLINE PIPING AND CONTROL WIRES UNDER PAVING SHALL BE INSTALLED IN SEPARATE SLEEVES. MAINLINE AND LATERAL LINE SLEEVE SIZES SHALL BE A MINIMUM OF TWICE (2X) THE DIAMETER OF THE PIPE TO BE SLEEVED. CONTROL WIRE SLEEVES SHALL BE OF SUFFICIENT SIZE FOR THE REQUIRED NUMBER OF WIRES UNDER PAVING.
7. MAINLINE PIPING SHALL BE INSTALLED AT A BURIAL DEPTH OF 24", AND LATERAL LINES AT 18" BELOW FINISH GRADE. PIPE SHALL BE SAND BEDDED IN ROCKY CONDITIONS AS DETERMINED BY THE LANDSCAPE ARCHITECT.
8. THE IRRIGATION CONTRACTOR IS RESPONSIBLE FOR SIZING AND CORRECTLY INSTALLING ALL PIPE. VELOCITIES SHALL NOT EXCEED 5 FEET PER SECOND. ALL DAMAGED AND REJECTED PIPE SHALL BE REMOVED FROM THE SITE AT THE TIME OF REJECTION.
9. WATER METER AND POINT OF CONNECTION: SEE CIVIL DRAWINGS.
10. FINAL LOCATION AUTOMATIC CONTROLLER SHALL BE APPROVED BY OWNER'S AUTHORIZED REPRESENTATIVE PRIOR TO CONSTRUCTION.
11. ELECTRICAL POWER SOURCE AT CONTROLLER LOCATION SHALL BE PROVIDED. SEE ELECTRICAL ENGINEERING PLANS. THE IRRIGATION CONTRACTOR SHALL MAKE THE FINAL CONNECTION FROM THE ELECTRICAL SOURCE TO THE CONTROLLER AND INCLUDE ALL PERMITS.
12. ALL SPRINKLER HEADS SHALL BE SET PERPENDICULAR TO FINISH GRADE UNLESS OTHERWISE SPECIFIED.
13. THE IRRIGATION CONTRACTOR SHALL FLUSH AND ADJUST ALL SPRINKLER HEADS AND VALVES FOR OPTIMUM, HEAD TO HEAD, COVERAGE WITH MINIMAL OVER SPRAY ONTO WALKS, STREETS, WALLS, ETC. AND PROVIDE A METHOD OF WINTERIZING THE ENTIRE SYSTEM.
14. ALL SPRINKLER EQUIPMENT NOT OTHERWISE DETAILED OR SPECIFIED SHALL BE INSTALLED AS PER THE MANUFACTURER'S RECOMMENDATIONS AND SPECIFICATIONS IN ADHERENCE TO LOCAL CODES.
15. REFER TO PROJECT DETAILS FOR ADDITIONAL INFORMATION.
16. CALL LOCATE 2 WORKING DAYS BEFORE YOU DIG 811. ALL UTILITIES & STRUCTURES ARE NOT SHOWN. THE LOCATION OF THOSE SHOWN ARE APPROXIMATE. THE CONTRACTOR IS RESPONSIBLE TO FIELD VERIFY BOTH UNDERGROUND AND ABOVE GROUND EXISTING CONDITIONS. NOTIFY LANDSCAPE ARCHITECT FOR RESOLUTION AND MAKE MINOR CHANGES TO NEW CONSTRUCTION AT NO COST TO THE OWNER.
17. INSTALL ALL VALVE BOXES PERPENDICULAR TO ADJACENT FENCES, WALKS, AND BUILDINGS.

PLANT SCHEDULE

TREES	BOTANICAL NAME / COMMON NAME	CONT
AB	Acer palmatum `Bloodgood` / Bloodgood Japanese Maple	5 gal
FA	Fraxinus americana `Autumn Purple` / Autumn Purple Ash	2" Cal
GP	Ginkgo biloba `Princeton Sentry` / Princeton Sentry Ginkgo	2" Cal
LF	Liriodendron tulipifera `Fastigiata` / Tulip Tree	2" Cal
PE	Pinus sylvestris `Fastigiata` / Erect Scotch Pine	7-8` Tall
PT	Pinus thunbergii / Japanese Black Pine	7-8` Tall
PK	Prunus serrulata `Kwanzan` / Flowering Cherry	2" Cal
PX	Prunus x hillieri `Spire` / Spire Cherry	2" Cal
TR	Tilia americana `Redmond` / Redmond American Linden	2" Cal

SHRUBS	BOTANICAL NAME / COMMON NAME	SIZE
BG	Buxus x `Green Gem` / Green Gem Boxwood	5 gal
CK	Calamagrostis x acutiflora `Karl Foerster` / Feather Reed Grass	1 gal
DE	Dryopteris erythrosora / Autumn Fern	1 gal
EG	Euonymus fortunei `Emerald Gaiety` TM / Emerald Gaiety Euonymus	1 gal
GS	Geranium sanguineum / Blood Red Geranium	1 gal
HA	Hakonechloa macra `Aureola` / Golden Variegated Hakonechloa	1 gal
HS	Helictotrichon sempervirens / Blue Oat Grass	2 gal
HB	Hemerocallis x `Little Business` / Little Business Daylily	2 gal
HF	Hosta x `Francee` / Plantain Lily	2 gal
IR	Imperata cylindrica `Rubra` / Japanese Blood Grass	1 gal
JB	Juniperus sabina `Buffalo` / Buffalo Juniper	1 gal
PS	Panicum virgatum `Shenandoah` / Switch Grass	2 gal
PH	Penstemon digitalis `Husker Red` / Beardtongue	1 gal
PG	Picea pungens `Globosa` / Dwarf Globe Blue Spruce	5 gal
PZ	Prunus laurocerasus `Zabeliana` / Zabel Laurel	5 gal
R4	Rosa x `Meiboulka` P.P.A.F. / Oso Easy Cherry Pie Rose	2 gal

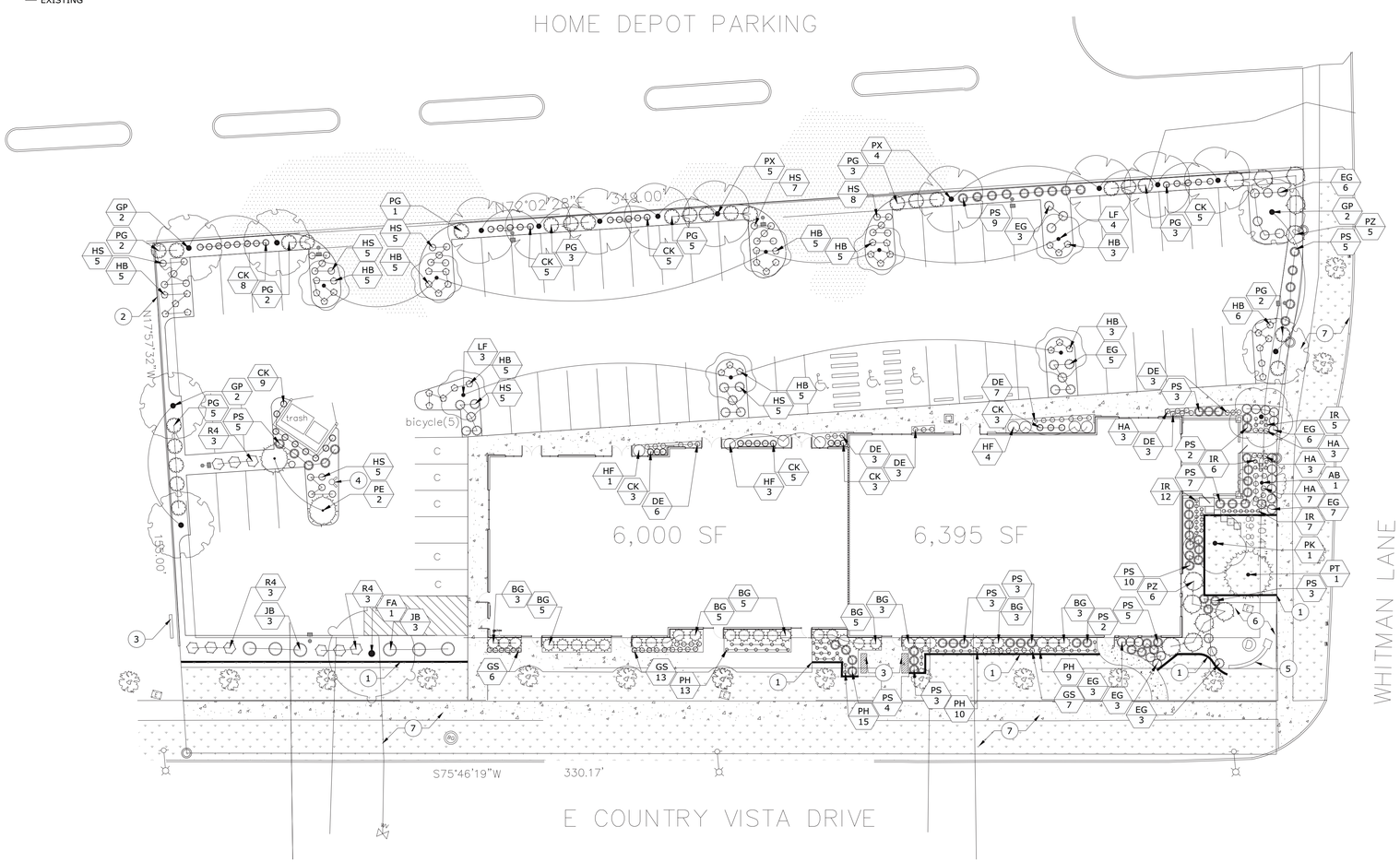

A LANDSCAPE PLAN

GRAPHIC SCALE
20 0 10 20 40
(IN FEET)
1 inch = 20 ft.

UNDERGROUND SERVICE ALERT
ONE-CALL NUMBER
811
CALL TWO BUSINESS DAYS BEFORE YOU DIG

PRELIMINARY - NOT FOR CONSTRUCTION

Michael Terrell
Landscape Architecture, PLLC
1421 N. Meadowwood Lane
Suite 150
Liberty Lake, WA
(509) 922-7449

©2016
Michael Terrell - Landscape Architect
This drawing may not be reproduced in any form without written permission. All rights and title to these drawings, including but not limited to the design are retained.

LANDSCAPE ARCHITECT'S SEAL
STATE OF WASHINGTON REGISTERED LANDSCAPE ARCHITECT
MICHAEL D. TERRELL
CERTIFICATE NO. 584

RETAIL SHELL BUILDING
KUNPENG, LLC.
E COUNTRY VISTA DR., LIBERTY LAKE WA
LANDSCAPE PLAN

REVISION	DATE
1	
2	
3	
4	

JOB NUMBER	16-041
DATE	9/27/16
DRAWN BY	SH
CHECKED BY	MT

DRAWING 1 OF 2

L-1

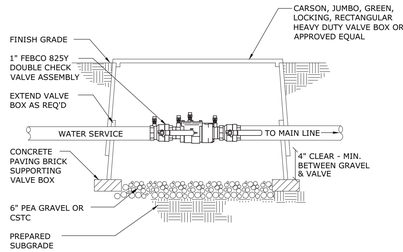

NOTES:
1. DOUBLE CHECK ASSEMBLY SHALL BE INSTALLED IN ACCORDANCE WITH ALL LOCAL CODES AND MANUFACTURER REQUIREMENTS.
2. VALVE BOX TO REST ON CONCRETE PAVER BRICKS, NO PRESSURE TO BE PLACED ON MAINLINE OR VALVE ASSEMBLY.
3. LOCATE VALVE BOXES PERPENDICULAR TO ADJACENT HARDSCAPES AND WALKS.

A DOUBLE CHECK ASSEMBLY

SCALE = NTS

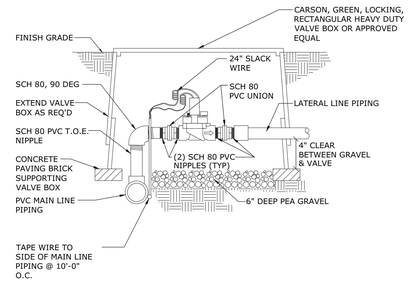

NOTES:
1. ONLY ONE AUTOMATIC VALVE PER VALVE BOX.
2. VALVE BOX TO REST ON CONCRETE PAVER BRICKS, NO PRESSURE TO BE PLACED ON MAINLINE OR LATERAL LINE.

B VALVE CONTROL BOX

SCALE = NTS

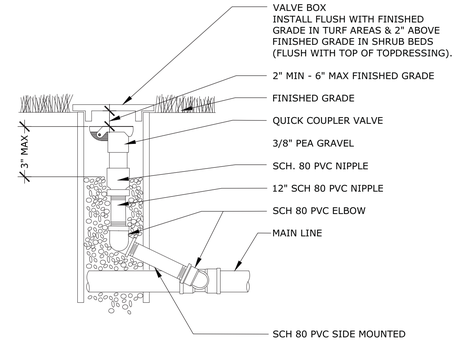

C QUICK COUPLER VALVE IN BOX

SCALE = NTS

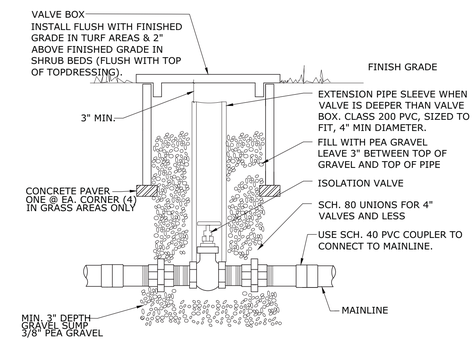

D ISOLATION VALVE

SCALE = NTS

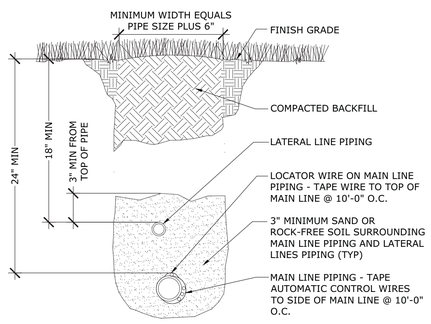

NOTES:
1. BACK FILL SHALL BE FREE OF ROCKS AND DEBRIS 2" DIAMETER AND GREATER

E IRRIGATION TRENCHING

SCALE = NTS

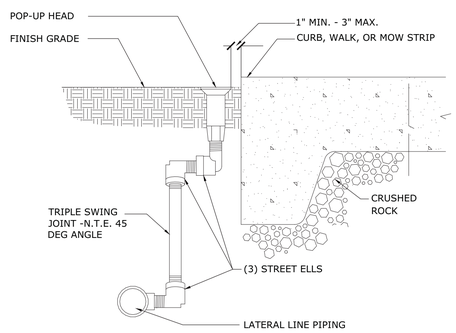

F TURF HEADS ADJACENT TO WALK

NTS

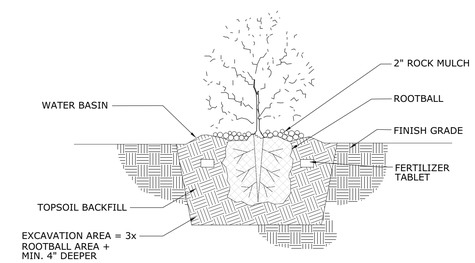

G SHRUB PLANTING

SCALE = NTS

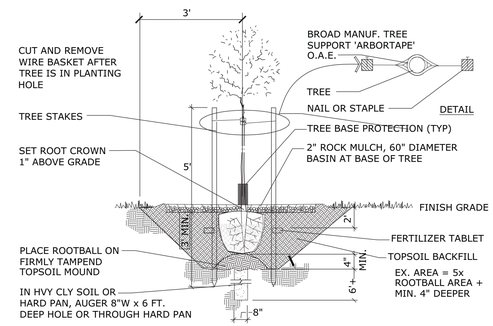

H TREE PLANTING

SCALE = NTS

UNDERGROUND SERVICE ALERT
ONE-CALL NUMBER
811
CALL TWO BUSINESS DAYS BEFORE YOU DIG

Michael Terrell
Landscape Architecture, PLLC
1421 N. Meadowwood Lane
Suite 150
Liberty Lake, WA
(509) 922-7449

© 2016
Michael Terrell - Landscape Architect
This drawing may not be reproduced in any form without written permission. All rights and title to these drawings, including but not limited to the design are retained.

LANDSCAPE ARCHITECT'S SEAL

STATE OF WASHINGTON REGISTERED LANDSCAPE ARCHITECT
MICHAEL D. TERRELL
CERTIFICATE NO. 584

RETAIL SHELL BUILDING
KUNPENG, LLC.
E COUNTRY VISTA DR., LIBERTY LAKE WA

DETAIL SHEET

REVISION	DATE
1	
2	
3	
4	

JOB NUMBER	16-041
DATE	9/27/16
DRAWN BY	SH
CHECKED BY	MT

DRAWING 2 OF 2

LD-1

Luminaire Schedule			
Symbol	Label	Description	LLF
	S03A	DSX1 LED 40C 530 40K T3M MVOLT HS	0.950
	S30A	DSXW1 LED 20C 530 AMBPC T3M MVOLT	0.950
	S20A	OLWX1 LED 13W 40K DDB	0.950
	S04	DSX1 LED 40C 530 40K T4M MVOLT HS	0.950

Calculation Summary					
Label	CalcType	Units	Avg	Max	Min
Site	Illuminance	Fc	0.69	3.06	0.00

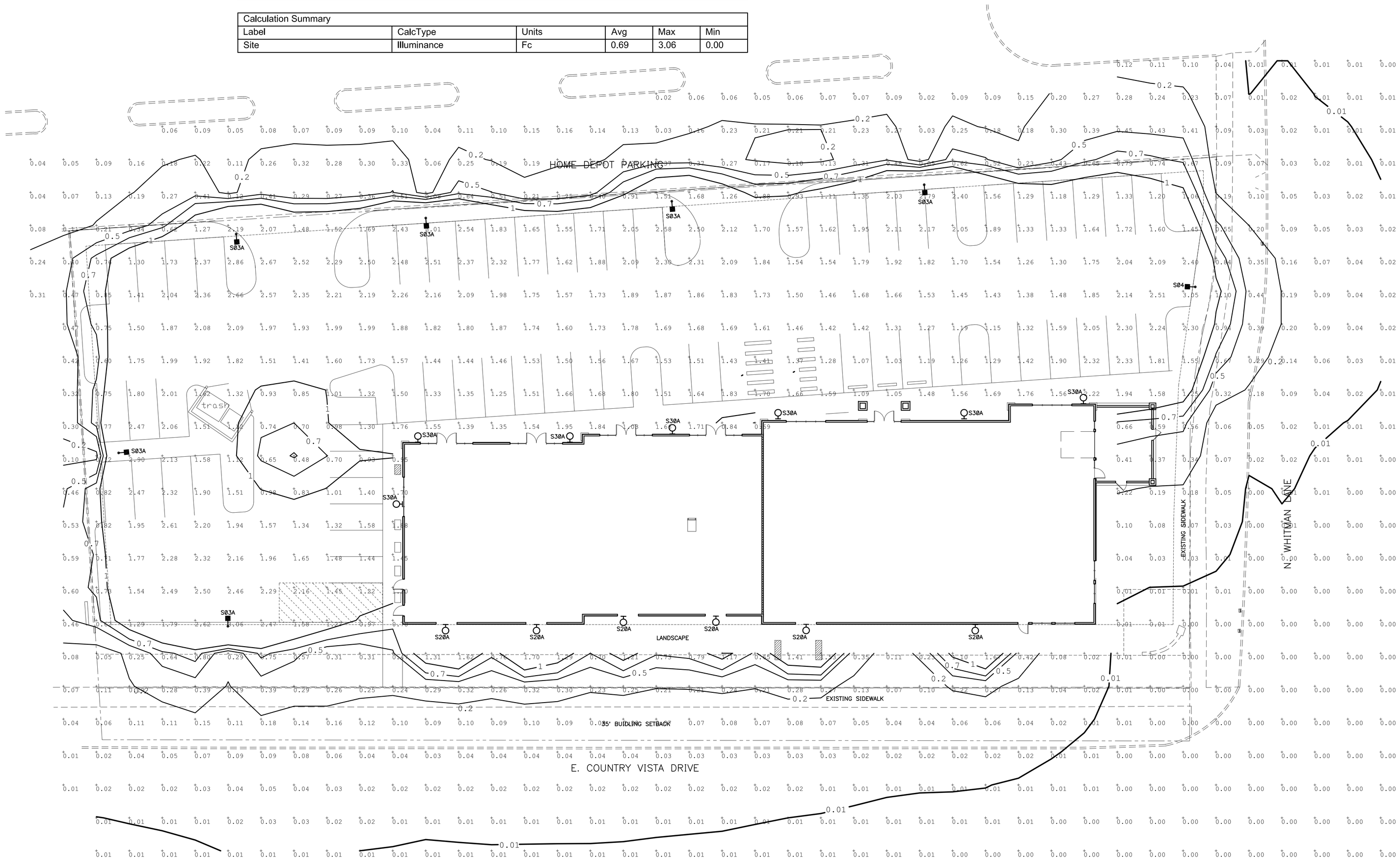

SITE LIGHTING CALCULATIONS

SCALE: 1" = 16'-0"

GENERAL NOTE:
THIS DRAWING IS INTENDED TO SHOW THE LIGHT INTENSITY THROUGH THE SITE AND HOW IT IS ASSOCIATES WITH THE SITE BOUNDARY. SEE SHEET E1.1B FOR PHOTOMETRIC GRID AND HOW IT ASSOCIATES WITH THE BOUNDARIES OF THE PARKING SURFACE.

Reviewed
CAD File No.
Drawn
Checked

REVISIONS/SUBMISSIONS

No.	Date
1	
2	
3	
4	
5	

Seal

STEPHEN H. HEGMAN
STATE OF WASHINGTON
16734
REGISTERED
PROFESSIONAL ENGINEER

THE CONTRACTOR SHALL CHECK AND VERIFY ALL ASPECTS OF THE WORK, AND REPORT ERRORS AND OR OMISSIONS TO THE ARCHITECT PRIOR TO COMMENCING WORK. ALL CONSTRUCTION SHALL CONFORM TO CODES AND ORDINANCES, LOCAL AND NATIONAL, IN EFFECT AT THE TIME OF CONSTRUCTION. DRAWINGS ARE DIAGRAMMATIC IN NATURE, AND DO NOT ATTEMPT TO REPRESENT ALL ITEMS REQUIRED FOR COMPLETION OF THE WORK.
DRAWINGS SHALL NOT BE SCALED.

RGU Architecture and Planning
1903 W Nora Ave
#C
Spokane, WA 99201
P 5094790850

STRUCTURAL:
MECHANICAL:
ELECTRICAL: DEI ELECTRICAL CONSULTANTS
SPOKANE, WASHINGTON

KUNPENG LLC
RETAIL SHELL BUILDING
LIBERTY LAKE, WASHINGTON

Drawing Title
SITE LIGHTING CALCULATIONS

Submittal: SCHEMATIC DESIGN
Date: 07/20/2016
Project No.
Scale: 1"=20'-0"

Drawing No.
E1.1A

2 of X

Luminaire Schedule			
Symbol	Label	Description	LLF
	S03A	DSX1 LED 40C 530 40K T3M MVOLT HS	0.950
	S30A	DSXW1 LED 20C 530 AMBPC T3M MVOLT	0.950
	S04A	DSX1 LED 40C 530 40K T4M MVOLT HS	0.950

Calculation Summary						
Label	CalcType	Avg	Max	Min	Avg/Min	Max/Min
Parking Lot	Illuminance	1.73	3.17	0.46	3.76	6.89

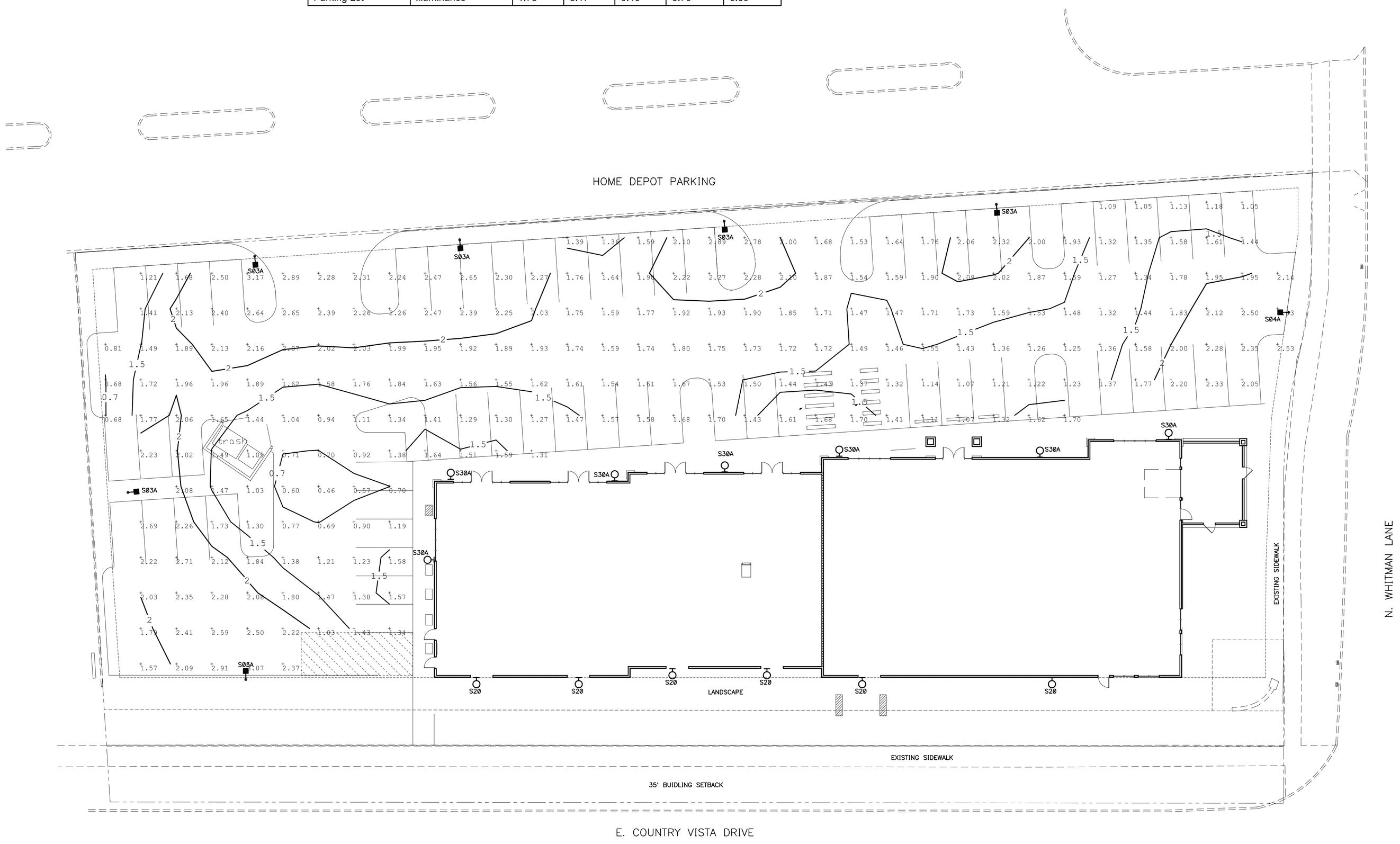

GENERAL NOTE:
THIS DRAWING IS INTENDED TO SHOW THE LIGHT INTENSITY FOR THE PARKING LOT AND HOW IT IS ASSOCIATES WITH PARKING LOT BOUNDARY. SEE SHEET E1.1A FOR PHOTOMETRIC GRID AND HOW IT ASSOCIATES WITH THE BOUNDARIES OF THE OVERALL SITE.

SITE - PARKING LOT CALCULATIONS

SCALE: 1" = 16'-0"

Reviewed
CAD File No.
Drawn
Checked

No.	REVISIONS/SUBMISSIONS	Date
1		
2		
3		
4		
5		

Seal

STEPHEN H. HELMAS
STATE OF WASHINGTON
16734
REGISTERED
PROFESSIONAL ENGINEER

THE CONTRACTOR SHALL CHECK AND VERIFY ALL ASPECTS OF THE WORK, AND REPORT ERRORS AND OR OMISSIONS TO THE ARCHITECT PRIOR TO COMMENCING WORK. ALL CONSTRUCTION SHALL CONFORM TO CODES AND ORDINANCES, LOCAL AND NATIONAL, IN EFFECT AT THE TIME OF CONSTRUCTION. DRAWINGS ARE DIAGRAMMATIC IN NATURE, AND DO NOT ATTEMPT TO REPRESENT ALL ITEMS REQUIRED FOR COMPLETION OF THE WORK.
DRAWINGS SHALL NOT BE SCALED.

RGU Architecture and Planning ★★
1 Washington Plaza
#C
Pasco, WA 99301
P 5094796400

STRUCTURAL:
MECHANICAL:
ELECTRICAL: DEI ELECTRICAL CONSULTANTS
SPOKANE, WASHINGTON

KUNPENG LLC
RETAIL SHELL BUILDING
LIBERTY LAKE, WASHINGTON

Drawing Title
SITE - PARKING LOT CALCULATIONS

Submittal: SCHEMATIC DESIGN
Date: 07/20/2016
Project No.
Scale: 1"=20'-0"

Drawing No.
E1.1B

2 of X