LEGACY VILLAS

LIBERTY LAKE, WASHINGTON

PROJECT INFORMATION

Site Address:

TBD COUNTRY VISTA DRIVE

Code Compliance

2012 International Building Code (IBC)
2012 International Energy Conservation Code (IECC)
2012 International Fire Code (IFC)
2012 International Mechanical Code (IMC)
2012 International Plumbing Code (IPC)
2012 International Fuel Gas Code (IFGC)
2009 ICC/ANSI 117.1

Parcel Number:

55156.9202

Height and Number of Stories:

ACTUAL : 33'6" HIGH; 2 STORIES
ALLOWABLE HEIGHT: 40' HIGH; 3 STORIES

Type of Construction:

V–B SPRINKLERED NFPA 13R

Occupancy Classification:

MULTI–FAMILY RESIDENTIAL

ZONING _____ **M-2**
BUILDING USE _____ (MULTI–FAMILY) **R-2 OCCUPANCY**
SITE AREA _____ (15.92 ACRES) **693,766 S.F.**

DRAWING INDEX

		CONST. SET DATE	SUBMITTAL DATE 6/20/2016	REVISION DATE	REVISION DATE
ARCHITECTURAL					
A0.1	TITLE SHEET/ GENERAL NOTES				
A0.2	PROJECT INFORMATION & ADA/GENERAL NOTES				
A0.3	CODE SHEET				
A1.0	SITE PLAN				
A2.0	6–PLEX MAIN FLOOR PLAN				
A2.1	6–PLEX 2ND FLOOR PLAN & SCHEDULES				
A2.2	ELEVATION AND WINDOW SHEDULE				
A2.3	ELEVATIONS				
A2.4	ROOF PLAN				
A2.5	WALL SECTIONS				
A2.6	DETAILS				
A2.7	STAIR DETAILS				
A2.8	WALL DETAILS				
STRUCTURAL					
S1.1	STRUCTURAL GENERAL NOTES				
S1.2	STRUCTURAL GENERAL NOTES				
S1.3	TYPICAL STRUCTURAL DETAILS				
S1.4	TYPICAL STRUCTURAL DETAILS				
S1.5	TYPICAL STRUCTURAL DETAILS				
S2.1	FOUNDATION AND MAIN FLOOR FRAMING PLAN				
S2.2	SECOND FLOOR FRAMING AND SHEAR PLAN				
S2.3	ROOF FRAMING PLAN				
S3.1	FOUNDATION DETAILS				
S4.1	FLOOR FRAMING DETAILS				
S4.2	FLOOR FRAMING DETAILS				
S5.1	ROOF FRAMING DETAILS				

ARCHITECTURAL ABBREVIATIONS

&	And	D.F.	Drinking Fountain	FURR.	Furring	N.	North	SECT.	Section
L	Angle	DET.	Detail	FUT.	Future	N.I.C.	Not In Contract	SH.	Shelf
@	At	DIA.	Diameter	GA.	Gauge	NO.or#	Number	SHR.	Shower
℄	Centerline	DIM.	Dimension	GALV.	Galvanized	NOM.	Nominal	SHT.	Sheet
φ	Diameter or Round	DISP.	Dispenser	G.B.	Grab Bar	N.T.S.	Not To Scale	SHW	Single Hung Window
⊥	Perpendicular	DN.	Down	GL.	Glass			SIM.	Similar
#	Pound or Number	D.O.	Door Opening	GND.	Ground	O.A.	Overall	S.N.D.	Sanitary Napkin Dispenser
(E)	Existing	DR.	Door	GR.	Grade	OBS.	Obscure	S.N.R.	Sanitary Napkin Receptacle
		DWR.	Drawer	GYP.	Gypsum	O.C.	On Center	SPEC.	Specification
ACOUS.	Acoustical	DS.	Downspout			O.D.	Outside Diameter (Dim.)	SQ.	Square
A.D.	Area Drain	D.S.P.	Dry Standpipe	H.B.	Hose Bibb	OFF.	Office	SST.	Stainless Steel
ADJ.	Adjustable	DWG.	Drawing	H.C.	Hollow Core	OPNG.	Opening	S.S.K.	Service Sink
AGGR.	Aggregate			HDWD.	Hardwood	OPP.	Opposite	STA.	Station
AL.	Aluminum	E.	East	HDWE.	Hardware			STD.	Standard
APPROX.	Approximate	EA.	Each	H.M.	Hollow Metal	PRCST.	Pre–cast	STL.	Steel
ARCH.	Architectural	E.J.	Expansion Joint	HORIZ.	Horizontal	PL.	Plate	STOR.	Storage
ASB.	Asbestos	EL.	Elevation	HR.	Hour	P. LAM.	Plastic Laminate	STRL.	Structural
ASPH.	Asphalt	ELEC.	Electrical	HGT.	Height	PLAS.	Plaster	SUSP.	Suspended
		ELEV.	Elevator			PLYWD.	Plywood	SYM.	Symmetrical
BD.	Board	EMER.	Emergency	I.D.	Inside Diameter	PR.	Pair		
BITUM.	Bituminous	ENCL.	Enclosure	INSUL.	Insulation	PT.	Point	TRD.	Tread
BLDG.	Building	E.P.	Electrical Panelboard	INT.	Interior	P.T.D.	Paper Towel Dispenser	T.B.	Towel Bar
BLK.	Block	EQ.	Equal			P.T.D/R	Combination Paper Towel	T.C.	Top of Curb
BLKG.	Blocking	EQPT.	Equipment				Dispenser & Receptacle	TEL.	Telephone
BM.	Beam	E.W.C.	Electric Water Cooler	JAN.	Janitor	PTN.	Partition	TER.	Terrazzo
BOT.	Bottom	EXST.	Existing	JT.	Joint	P.T.R.	Paper Towel Receptacle	T.& G.	Tongue and Groove
		EXPO.	Exposed					THK.	Thick
CAB.	Cabinet	EXP.	Expansion	KIT.	Kitchen	Q.T.	Quarry Tile	T.P.	Top of Pavement
C.B.	Catch Basin	EXT.	Exterior					T.P.D.	Toilet Paper Dispenser
CEM.	Cement			LAB.	Laboratory	R.	Riser	T.V.	Television
CER.	Ceramic	F.A.	Fire Alarm	LAM.	Laminate	RAD.	Radius	T.W.	Top of Wall
C.I.	Cast Iron	F.B.	Flat Bar	LAV.	Lavatory	R.D.	Roof Drain	TYP.	Typical
CLG.	Ceiling	F.D.	Floor Drain	LKR.	Locker	REF.	Reference		
CLKG.	Calking	FDN.	Foundation	LT.	Light	REFR.	Refrigerator	UNF.	Unfinished
CLO.	Closet	F.E.	Fire Extinguisher			RGTR.	Register	U.O.N.	Unless Otherwise Noted
CLR.	Clear	F.E.C.	Fire Extinguisher Cab.	MAX.	Maximum	REINF.	Reinforced	UR.	Urinal
COL.	Column	F.H.C.	Fire Hose Cabinet	M.C.	Medicine Cabinet	REQ.	Required		
CONC.	Concrete	FIN.	Finish	MECH.	Mechanical	RESIL.	Resilient	VERT.	Vertical
CONN.	Connection	FL.	Floor	MEMB.	Membrane	RM.	Room	VEST.	Vestibule
CONSTR.	Construction	FLASH.	Flashing	MET.	Metal	R.O.	Rough Opening	W.	West
CONT.	Continuous	FLUOR.	Fluorescent	MFR.	Manufacturer	RWD.	Redwood	W/	With
CORR.	Corridor	F.O.C.	Face of Concrete	MH.	Manhole	R.W.L.	Rain Water Leader	W.C.	Water Closet
CTSK.	Countersunk	F.O.F.	Face of Finish	MIN.	Minimum			WD.	Wood
CNTR.	Counter	F.O.S.	Face of Studs	MIR.	Mirror	S.	South	WDW	Window
CTR.	Center	FPRF.	Fireproof	MISC.	Miscellaneous	S.C.	Solid Core	W/O	Without
		F.S.	Full Size	M.O.	Masonry Opening	S.C.D.	Seat Cover Dispenser	WP.	Waterproof
DBL.	Double	FT.	Foot or Feet	MTD.	Mounted	SCHED.	Schedule	WSCT.	Wainscot
DEPT.	Department	FTG.	Footing	MUL.	Mullion	S.D.	Soap Dispenser	WT.	Weight

SYMBOLS

- AA / 4 — BUILDING SECTION SHT. ON WHICH SECTION OCCURS
- A / 3 — WALL SECTION SHT. ON WHICH SECTION OCCURS
- 1 / 5 — TYPICAL DETAIL SHT. ON WHICH DETAIL OCCURS
- 2 / A5 — INTERIOR ELEVATION(S) SHT. ON WHICH ELEV. OCCURS ARROW INDICATE(S) DIRECTION SEEN FROM
- A / 1 — COLUMN LINE ORIENT POINT OF HEXAGONS TO COLUMN LINE. LETTERS IN ONE DIRECTION NUMBERS IN THE OTHER
- A — WINDOW TYPE
- 2.1 — FINISH COLOR
- X / 4 — EQUIPMENT TYPE X=X–RAY, F=FOOD SERVICE, 4=EQUIPMENT GROUP
- 42.0 — GRID LINES FOR SURVEYORS GRID MODULE GRID, ETC.
- MATCH LINE SHADED PORTION IS THE SIDE CONSIDERED
- 1 / 2 — DOOR SYMBOL DOOR MARK HARDWARE GROUP
- 3 — REVISION
- F — PARTITION WALL TYPE
- 98'–6" — TOP OF FOOTING
- 8 — FLAG NOTE
- WORK POINT, CONTROL POINT OR DATUM POINT
- OFFICE / 102 / 1A1 / 9–6 — ROOM IDENTIFICATION TYPE 1
  - ROOM NAME
  - ROOM NO.
  - ROOM MATERIAL CODES
    - 1ST NO.–FLOOR/BASE
    - 2ND NO.–WALLS/WAINSCOT
    - 3RD NO.–CEILING
  - CEILING HEIGHT OTHER THAN TYPICAL
- OFFICE / 102 — ROOM IDENTIFICATION TYPE 2
  - ROOM NAME
  - ROOM NUMBER
- EXISTING CONTOURS
- NEW CONTOURS
- S — SEWER LINE
- W — WATER LINE
- G — GAS LINE
- ℄ — CENTERLINE OF RIGHT–OF–WAY
- PROPERTY LINE
- O.P. — OVERHEAD POWER
- MH — MANHOLE
- CATCH BASIN
- FH — FIRE HYDRANT
- PP — POWER POLE
- x — FENCE
- T.W. 10.0 — TOP OF WALL
- T.C. 16.0 — TOP OF CURB
- T.P. 16.4 — TOP OF PAVEMENT
- 72.0 / 64.0 — NEW FINISH GRADE (45) / EXISTING GRADE (HORZ.)
- X 33.1 — SPOT ELEVATION

CONSULTANTS

ARCHITECTURAL
WYATT ARCHITECTS
AND ASSOCIATES P.S.
PO BOX 141713
SPOKANE VALLEY, WASHINGTON 99214
PHONE:(509)928-1860
CONTACT: LEE SCHWARTZENBURG

STRUCTURAL/ LANDSCAPE
WHIPPLE CONSULTING ENGINEERS
2528 N SULLIVAN ROAD
SPOKANE VALLEY, WA 99216
PHONE:(509)893-2617
CONTACT: TODD WHIPPLE

CIVIL
LAAKE CITY ENGINEERING
3909 N. Schreiber Way
Coeur d'Alene, Idaho 83815
PHONE:(208) 676-0230
CONTACT: DREW DITTMAN

MECHANICAL
KARTCHNER ENGINEERING
6814 E Jackson Ridge Ln,
GREENACRES, WASHINGTON 99016
PHONE:(509)922-0383
CONTACT: MARK KARTCHNER

OWNER/DEVELOPER
LEGACY VILLAS LLC
11808 E MANSFILED
SPOKANE VALLEY, WA 99016
PHONE:(208)640-0148
CONTACT: GREG GERVAIS

REVISIONS

PROPOSED 18 UNIT BUILDING FOR:
LEGACY VILLAS
COUNTRY VISTA ROAD, LIBERTY LAKE, WA

WYATT ARCHITECTS AND ASSOCIATES
JAMES A. McARTHUR, A.I.A.
Project Manager:
Lee Schwartzenburg
P.O. Box 141713
Spokane Valley,
Washington 99214
lee@wyattarchitects.com
4206 South Crestline
Spokane, WA 99203
Phone 509-327-7364 / Fax 509-327-7869
jmcarthur@wyattarchitects.com

SHEET TITLE: TITLE SHEET
DRAWN BY: LJS
PROJECT: 15:26
DATE: 6/20/2016
SHEET NO. A0.1

CONTRACTOR SHALL VERIFY ALL EXISTING DIMENSIONS AND CONDITIONS BEFORE ORDERING MATERIALS OR BEGINNING WORK. REPORT ALL INCONSISTENCIES TO ARCHITECT PRIOR TO PROCEEDING WITH WORK. TYP.

ARCHITECTURAL GENERAL NOTES:

1. THE APPLICABLE BUILDING CODE IS THE 2012 INTERNATIONAL BUILDING CODE (2012 IBC). FOLLOWING ALL APPLICABLE CODES IS REQUIRED.
2. DO NOT SCALE DRAWINGS.
3. FIGURED DIMENSIONS TAKE PRECEDENCE OVER SCALED DRAWINGS. WHERE DISCREPANCIES OCCUR, THEY SHALL BE REPORTED TO ARCHITECT FOR RESOLUTION.
4. DETAILED DRAWINGS AND LARGER SCALE DRAWINGS TAKE PRECEDENCE OVER SMALLER SCALE DRAWINGS.
5. CONCRETE DIMENSIONS ARE GIVEN TO FACE OF CONCRETE AND TO THE FACE OF ROUGH OPENINGS.
6. PARTITION DIMENSIONS ARE GIVEN TO THE FACE OF STUD UNLESS OTHERWISE NOTED.
7. DOOR OPENING LOCATIONS ARE DIMENSIONED TO ROUGH OPENING OR CENTERLINE OF OPENING.
8. WHERE NO MATERIAL NOTES OCCUR, THE GRAPHIC MATERIAL INDICATION SHALL INDICATE MATERIAL TYPES AND ITEMS. SEE MATERIALS & SYMBOLS LIST ON THIS SHEET.
9. PROVIDE LANDINGS AND FLOOR LEVELS AT DOORS THAT COMPLY WITH THE 2012 IBC SECTION 1008.1.4, 1008.1.5 AND 1008.1.6
10. ALL NEW CONSTRUCTION TO COMPLY WITH ICC/ANSI A117.1 – 2009.
11. ALL MATERIALS SHALL BE INSTALLED IN ACCORDANCE WITH THE MANUFACTURER'S RECOMMENDATIONS AND SPECIFICATIONS.
12. EACH SUBCONTRACTOR SHALL VERIFY ALL EXISTING CONDITIONS AND DIMENSIONS FOR ACCURACY PRIOR TO COMMENCING WITH THE WORK. ANY DISCREPANCY SHALL BE BROUGHT TO THE ATTENTION OF THE ARCHITECT.
13. PENETRATIONS THROUGH RATED ASSEMBLIES SHALL BE FIRESTOPPED IN ACCORDANCE WITH 2012 IBC SECTION 712 AND 716.
14. THE DRAWINGS INDICATE LOCATION, DIMENSIONS, REFERENCE, AND TYPICAL DETAILS OF CONSTRUCTION. THE DRAWINGS DO NOT INDICATE EVERY CONDITION – WORK NOT PARTICULARLY DETAILED SHALL BE OF CONSTRUCTION SIMILAR TO PARTS THAT ARE DETAILED.
15. FIRE–RESISTIVE FLOOR–CEILING OR ROOF CEILING CONSTRUCTION SYSTEMS SHALL HAVE FIRE–RESISTANCE RATINGS SET FORTH IN 2006 IBC. PENETRATIONS IN FLOORS AND CEILINGS REQUIRING PROTECTED OPENINGS SHALL BE FIRE–STOPPED WITH ASSEMBLIES TESTED IN ACCORDANCE WITH ASTM E814.
16. THE INTERIOR NON–BEARING WALLS SHOULD BE SHOWN TO ALLOW ROOF TRUSS DEFLECTION WITHOUT LOADING THE WALL, SUCH AS USE OF SIMPSON STC CLIP OR EQUIVALENT.
17. PROVIDE FIRE EXTINGUISHER CABINETS AND FIRE EXTINGUISHERS AS REQUIRED BY THE 2012 INTERNATIONAL FIRE CODE. IF NEEDED
18. WOOD MEMBERS IN CONTACT WITH CONCRETE SHALL BE PRESSURE TREATED.
19. FIRE STOPPING SHALL BE PROVIDED IN THE FOLLOWING LOCATIONS:
    –IN CONCEALED SPACES OF STUD WALLS AND PARTITIONS, INCLUDING FURRED SPACES, AT THE CEILING AND FLOOR LEVELS AND AT 10 FOOT INTERVALS ALONG THE LENGTH OF THE WALL.
    –AT ALL INTERCONNECTIONS BETWEEN CONCEALED VERTICAL AND HORIZONTAL SPACES AS OCCUR AT SOFFITS, DROP CEILINGS AND COVE CEILINGS.
    –IN OPENINGS AROUND VENTS, PIPES, DUCTS, CHIMNEYS, FIREPLACES AND SIMILAR OPENINGS WHICH AFFORD A PASSAGE FOR FIRE AT CEILING AND FLOOR LEVELS, WITH NON–COMBUSTABLE MATERIALS.
20. AN ATTIC ACCESS OPENING NOT LESS THAN 20 INCHES BY 30 INCHES SHALL BE PROVIDED IN THE CEILING OF EACH SEPARATE DWELLING UNIT ON THE TOP FLOOR OF BUILDINGS WITH COMBUSTIBLE CEILING OR ROOF CONSTRUCTION. LOCATE TO PROVIDE 30" MIN. CLEAR HEADROOM IN THE ATTIC AT OR ABOVE THE ACCESS OPENING.
21. WHEN FIRE–RATED WALLS AND PARTITIONS REQUIRE PROTECTED OPENINGS, THE FOLLOWING PENETRATIONS INTO OR THROUGH SUCH CONSTRUCTION ARE PERMITTED:
    –COPPER OR FERROUS PIPES OR CONDUITS MAY PENETRATE THE WALLS OR PARTITION, PROVIDED FIRE STOPPING IS PROVIDED.
    –OPENINGS FOR STEEL ELECTRICAL OUTLET BOXES NOT EXCEEDING 16 SQUARE INCHES IN AREA, PROVIDED THE AREA OF SUCH OPENINGS DOES NOT AGGREGATE MORE THAN 100 SQUARE INCHES FOR ANY 100 SQUARE FOOT OF WALL OR PARTITION AREA. OUTLET BOXES ON OPPOSITE SIDES OF WALLS OR PARTITIONS SHALL BE SEPARATED BY A HORIZONTAL DISTANCE OF 24 INCHES.
22. ALL INSULATION MATERIALS INCLUDING FACING, SUCH AS VAPOR BARRIER OR BREATHER PAPERS INSTALLED WITHIN FLOOR–CEILING ASSEMBLIES, ROOF–CEILING ASSEMBLIES, WALLS, CRAWL SPACES OR ATTICS SHALL HAVE A FLAME SPREAD RATING NOT TO EXCEED 25 AND A SMOKE DENSITY NOT TO EXCEED 450.
23. FIELD VERIFY DIMENSIONS AND SIZE OF ALL FIXTURES/APPLIANCES PRIOR TO ORDERING, ERECTION AND INSTALLATION.
24. CONTRACTOR SHALL VERIFY ALL EXISTING DIMENSIONS AND CONDITIONS BEFORE ORDERING MATERIALS AND BEGINNING WORK. REPORT ALL INCONSISTENCIES TO ARCHITECT PRIOR TO PROCEEDING WITH CONSTRUCTION.

GENERAL NOTES

1. CONTRACTOR TO VERIFY ALL DIMENSIONS IN THE FIELD AND SHALL NOTIFY THE ARCHITECT OF ANY DISCREPANCIES. ALL WORK REQUIRING MEASURING SHALL BE DONE ACCORDING TO FIGURES ON DRAWINGS AND NOT SCALED FROM DRAWINGS. THE ARCHITECT WILL FURNISH ANY MISSING DIMENSIONS UPON REQUEST.
2. ALL WORK SHALL CONFORM TO PREVAILING CODES, ORDINANCES, AND REQUIREMENTS.
3. CONTRACTOR IS RESPONSIBLE TO OBTAIN ALL PERMITS AND INSPECTIONS REQUIRED FOR CONSTRUCTION, AND SHALL PAY ALL APPLICABLE FEES.
4. DIMENSIONS:
    A. DIMENSIONS ON DRAWINGS ARE TO FACE OF STUDS OR CENTER LINE OF COLUMNS TYPICALLY, UNLESS OTHERWISE NOTED.
    B. EXTERIOR DIMENSIONS ARE TO FACE OF STUDS.
    C. DOOR AND CASED OPENINGS WITHOUT LOCATION DIMENSIONS OR DETAILS ARE TO BE CENTERED BETWEEN ADJACENT WALLS. DOORS ADJACENT TO ONE WALL, BUT NOT DIMENSIONED, SHALL BE LOCATED WITH DOOR OPENING 3" FROM FACE OF ADJACENT WALL.
    D. VERIFY ALL DIMENSIONS AND CONDITIONS AND NOTIFY ARCHITECT OF ALL DISCREPANCIES PRIOR TO PROCEEDING WITH WORK.
5. CODES: ALL WORK SHALL CONFORM TO APPLICABLE BUILDING CODES, ORDINANCES AND LAWS HAVING JURISDICTION AT PROJECT SITE. NOTIFY ARCHITECT OF ALL CONFLICTS.
    ENEGY REQUIREMENTS SHALL COMPLY WITH THE 2012 WASHINGTON STATE ENERGY CODE PER TABLE R402.1.1.
6. DO NOT SCALE DRAWINGS: USE DIMENSIONS SHOWN ON DRAWINGS AND ACTUAL FIELD MEASUREMENTS. NOTIFY ARCHITECT OF DISCREPANCIES FOUND.
7. COORDINATION:
    A. REVIEW AND COORDINATE REQUIREMENTS OF THE DRAWINGS BEFORE BEGINNING INSTALLATION OF WORK. REPORT DISCREPANCIES DISCOVERED IN WRITING TO THE ARCHITECT. WORK INSTALLED AND FOUND IN CONFLICT WITH THE REQUIREMENTS INDICATED ON DRAWINGS SHALL BE CORRECTED BY THE CONTRACTOR.
    B. VERIFY THAT UTILITY REQUIREMENTS CHARACTERISTICS OF OPERATING EQUIPMENT ARE COMPATIBLE WITH BUILDING UTILITIES. COORDINATE WORK OF VARIOUS CONSTRUCTION TRADES HAVING INTERDEPENDENT RESPONSIBILITIES FOR INSTALLING, CONNECTING TO, AND PLACING IN SERVICE OF SUCH EQUIPMENT.
    C. COORDINATE SPACE REQUIREMENTS AND INSTALLATION OF MECHANICAL AND ELECTRICAL WORK INDICATED ON DRAWINGS. VERIFY LOCATION AND REQUIRED OPENING SIZES FOR MECHANICAL EQUIPMENT, LOCATION AND SIZES OF EQUIPMENT FOR PADS AND BASES, AND REQUIREMENT AND LOCATION OF POWER AND WATER OR DRAIN INSTALLATION WITH EQUIPMENT MANUFACTURERS BEFORE PROCEEDING WITH THE WORK.
    D. COMPLY WITH INSTALLATION REQUIREMENTS OF MANUFACTURER'S INSTRUCTIONS AND APPROVED SHOP DRAWINGS.
    E. THE CONTRACTOR SHALL PROVIDE RADON MITIGATION IN ALL APARTMENT BUILDINGS.

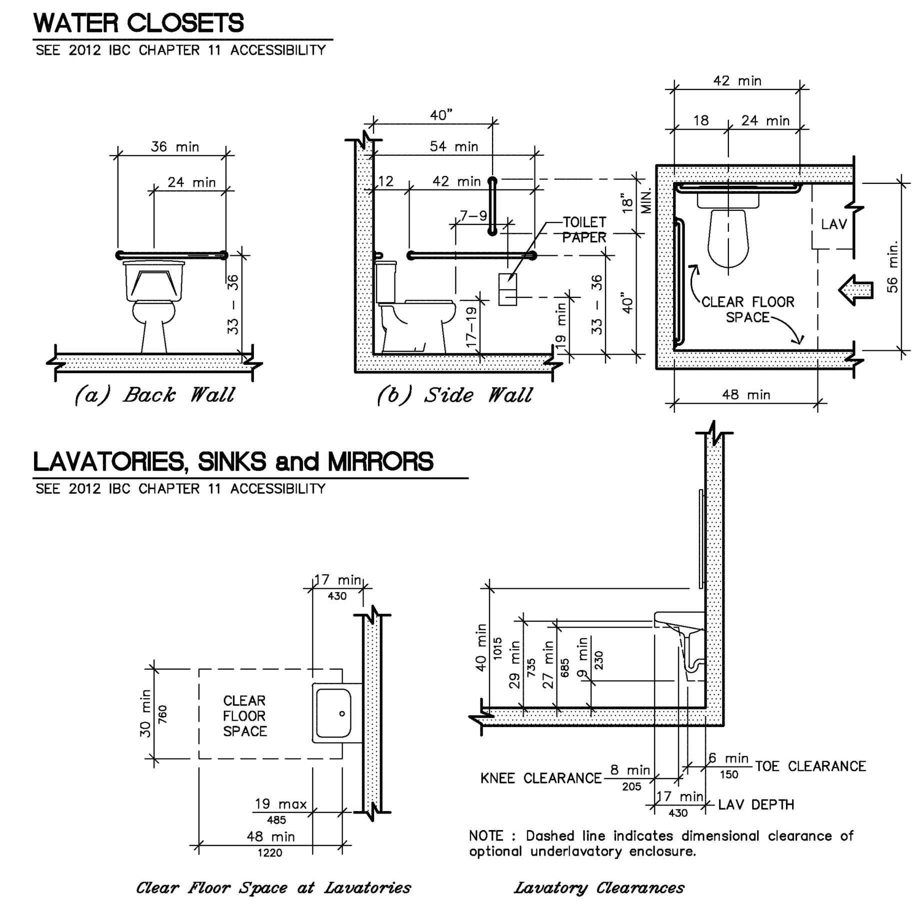

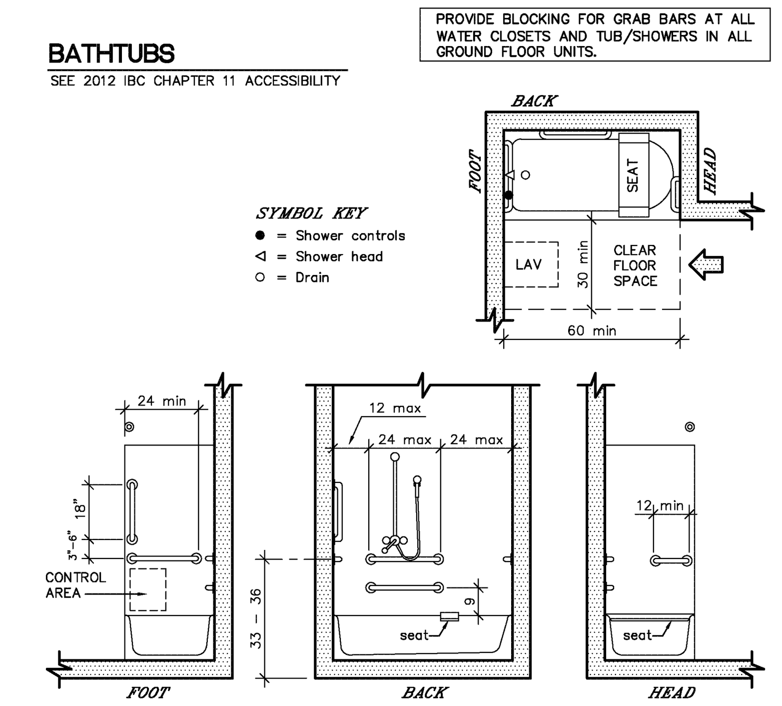

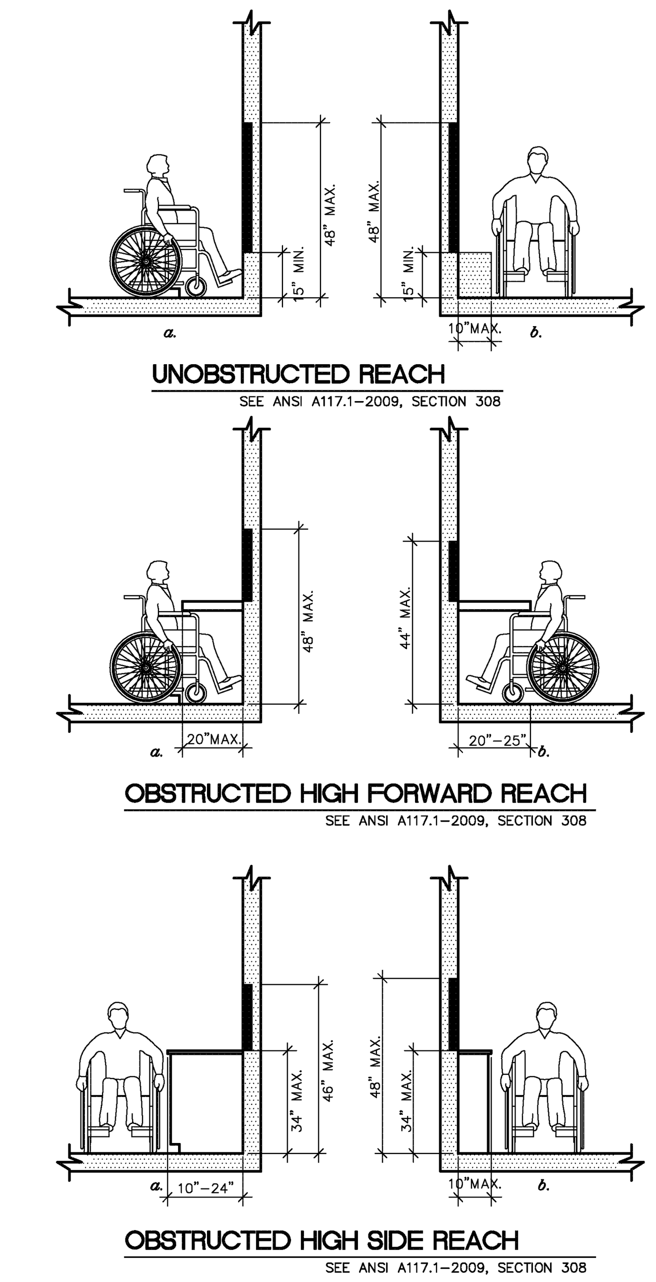

NOTE: (TYPICAL IN ALL TYPE "A" ACCESSIBLE UNITS) REQUIRE 34" COUNTER HEIGHTS, FROM TOP OF SINK RIM TO FINISH FLOOR. 30" OF COUNTER SHALL BE DEDICATED TO WORKING SURFACES WITH KNEE SPACE IN THE KITCHEN.

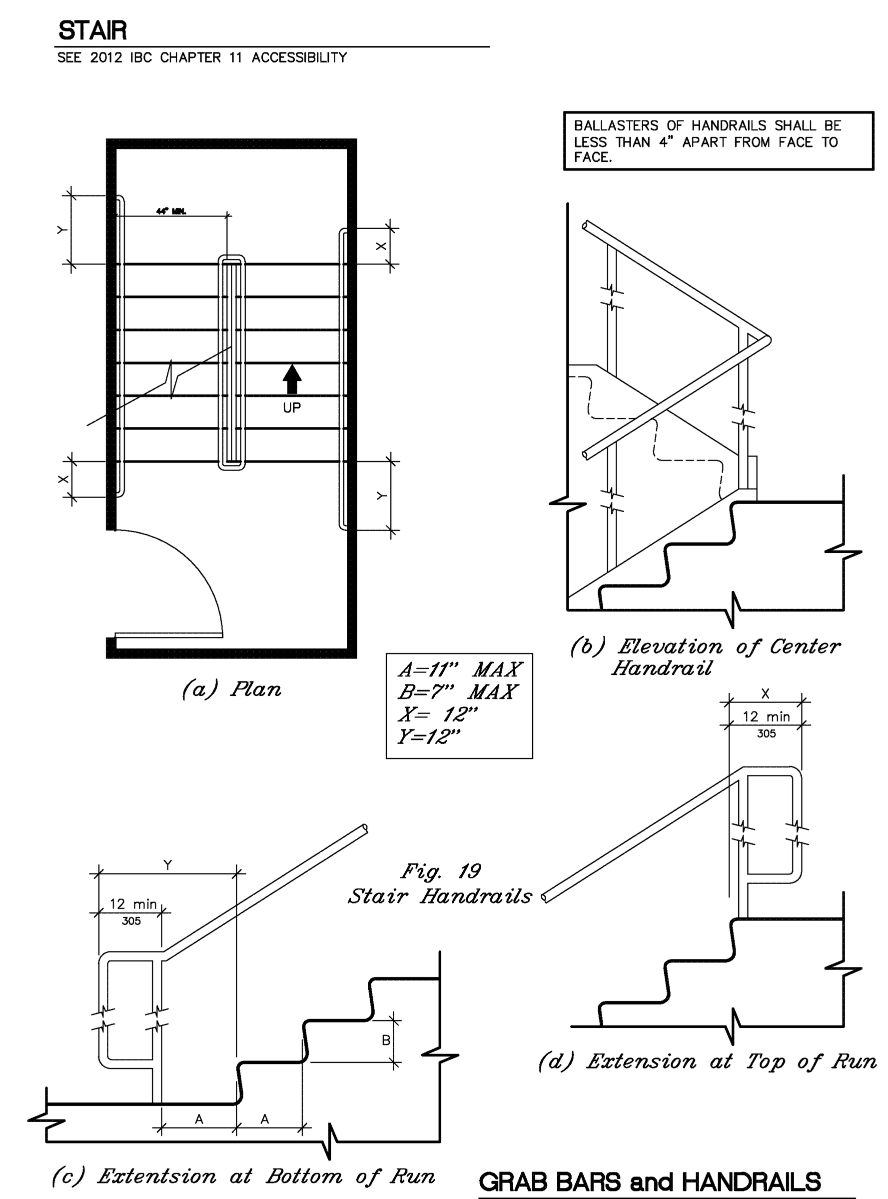

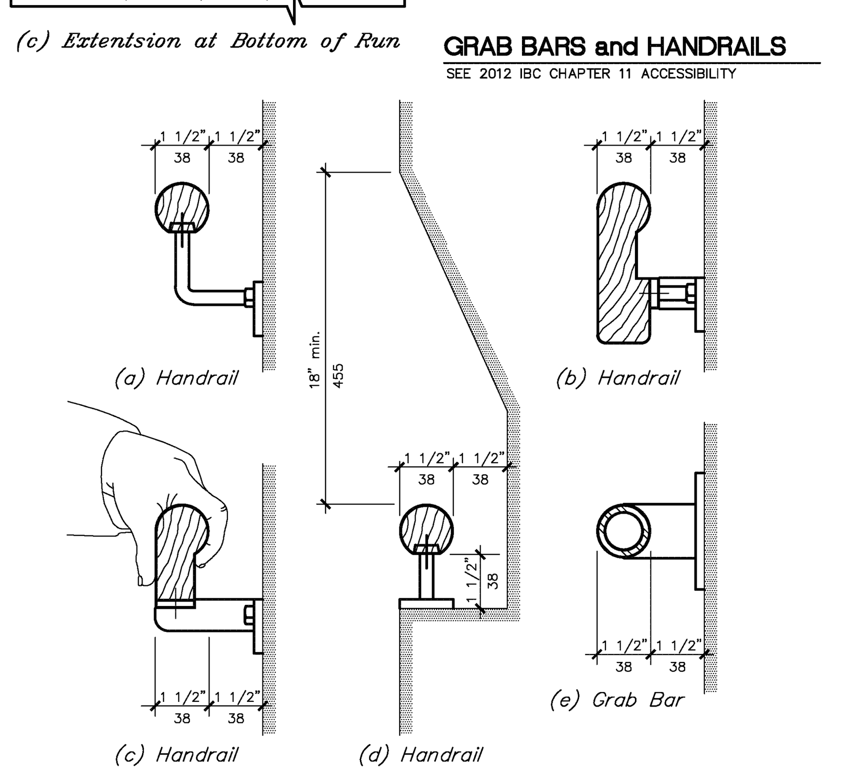

GENERAL ACCESSIBILITY NOTES

-ALL BUILDINGS SHALL COMPLY WITH INTERNATIONAL BUILDING CODE 2012 AND ANISI 117.1-2009.

-PROVIDE THE REQUIRED 5% OF TYPE 'A' ACCESSIBLE UNITS OF THE TOTAL UNITS ON SITE. ALL OTHER GROUND FLOOR UNITS SHALL BE TYPE 'B'.

-PROVIDE A MANUAL FIRE ALARM PER IBC SECTION 907.2.9.

-RAMPS 0 TO 5% (1:20) DON'T REQUIRE HANDRAILS. BUT HANDRAILS ARE REQUIRED 5% TO 8.33%. NO SLOPE SHALL EXCEED 8.33% IF ACCESSIBLE ROUTE.

-EDGE PROTECTION SHALL BE PROVIDED ON EASH SIDE OF RAMP RUNS AND AT EACH SIDE OF LANDINGS. ANSI A117.1-2009, 405.9

-THE RISE PER ANY RAMP RUN SHALL BE 30" MAX. ANSI A117.1-2009, 405.6

-CLEAR WIDTH OF A RAMP RUN SHALL BE 36" WHERE HANDRAILS ARE PROVIDED ON THE SAM E RUN THE CLEAR WIDTH IS BETWEEN HANDRAILS. ANSI A117.1-2009, 405.5

-HALLWAYS SHALL BE A MINIMUM OF 36" IN WIDTH.

-RAMP HANDRAILS SHALL BE 34" - 38" VERTICALLY ABOVE THE RAMP. ANSI A117.1-2009, 505.4

-RAMP HANDRAILS SHALL EXTEND 12" HORIZONTALLY (MIN) BEYOND THE TOP AND BOTTOM OF RAMP RUNS. ANSI A117.1-2009, 505.10.1

-RAMPS SHALL HAVE LANDINGS AT TOP AND BOTTOM OF EACH RAMP RUN WITH A CLEAR WIDTH AT LEAST AS WIDE AS THE WIDEST RAMP TO THE LANDING AND SHALL HAVE A CLEAR LENGHT OF 60".

-GUARDRAILS OR OTHER BARRIERS SHALL BE PROVIDED WHERE OBJECTS PROTRUSION IS BEYOND THE LIMITS ALLOWED WHERE THE VERTICAL CLEARANCE IS LESS THAN 80" ABOVE THE FLOOR. THE LEADING EDGE OF SUCH GUARDRAIL OR BARRIER SHALL BE 27" MAX. ABOVE FINISH FLOOR. ANSI 307

-PROVIDE GUARDRAILS AT 42" HIGH AT EXTERIOR DECKS/BALCONIES. ANSI A117.1-2009

-GUARDRAILS SHALL HAVE BALUSTERS SUCH THAT A 4" DIAMETER SPHERE CANNOT PASS THROUGH. IBC SECTION 1013.3

-OBJECT WITH LEADING EDGES LESS THAN 27" AND NOT MORE THAN 80" ABOVE THE FLOOR SHALL PROTRUDE 4" MAX. HORIZONTALLY INTO THE CIRCULATION PATH. ANSI. 307.

-OBJECTS HAVE A 4" MAX. PROJECTION FROM WALL WITH A MAX. OF 24" WIDE AND GREATER THAN 27" ABOVE FINISH FLOOR, EXCEPTED WING WALL THAT GOES DOWN TO FLOOR.

-SIGNAGE PER IBC SHALL BE INSTALL AND FIELD VERIFIED AS TO THE LOCATION, TYPE, SIZE AND VERBIAGE.

-STAIR SIGNAGE:
PROVIDE TACTILE STAIR LEVEL IDENTIFICATION SIGNAGE PER ANSI A117.1 SECTION 703.3.
PROVIDE SIGNAGE INSIDE STAIR AT EXTERIOR DOOR STATING 'EXIT' PER ANSI SECTION 504.9.

-OPERABLE WINDOWS SHALL HAVE ACCESSIBLE CONTROLS AT A MAX. HEIGHT OF 48" ABOVE FINISH FLOOR.

-AN EGRESS WINDOW IS REQUIRED IN ALL BEDROOMS. AT LEAST 5.7 SQ. FT. IN SIZE

-ASSURE ALL DOORS HAVE ACCESSIBLE HARDWARE, SUCH AS LEVER STYLE.

-ALL DOORS NEED TO BE 32" CLEAR (36" RECOMMEND), EXCEPT DOORS THAT LEAD INTO AREAS WITH LESS THAN 24" IN DEPTH.

-DOORWAYS SHALL HAVE A CLEAR OPENING WIDTH OF 32" MIN.
MEASURED BETWEEN THE DOOR AND STOP, WITH THE DOOR OPEN 90 DEGREES.

-THRESHOLDS AT DOORWAYS SHALL BE ½" MAX. IN HEIGHT.

-ALL TYPE 'A' ACCESSIBLE AND TYPE 'B' ACCESSIBLE BATHROOMS REQUIRE GRAB BAR REINFORCEMENTS AT BATH TUBS, SHOWERS AND WATER CLOSETS.

-SIGN INDICATING ACCESSIBLE PARKING SHOULD BE LOCATED AT ALL ACCESSIBLE PARKING STALLS.

-IF WIDTH LESS THAN 48" THEN THE SLOPE OF THE FLARED SIDES OF THE CURB RAMP MUST NOT EXCEED 1:12.

-ACCESSIBLE PARKING SPACES MUST BE AT LEAST 96" WIDE AND HAVE AN ADJACENT ACCESS AISLE THAT IS 60" WIDE. VAN ACCESSIBLE 132" WIDE.

-2% OF PARKING SPACES SERVING DWELLING UNITS SHALL BE MADE ACCESSIBLE AND BE LOCATED ON AN ACCESSIBLE ROUTE. A MINIMUM OF ONE ACCESSIBLE PARKING SPACE REQUIRED AT SALES/ RENTAL OFFICE. FOR EVERY SIX OR FRACTION OF SIX ACCESSIBLE PARKING SPACES ONE VAN ACCESSIBLE SPACE IS REQUIRED. IBC 1106

-INSTALL BLOCKING FOR GRAB BARS AT TOILET AND BATHING FIXTURES IN ALL GROUND FLOOR UNITS.

- INSTALL ALL TOILETS 18" FROM DRYWALL FACE OF SIDE WALL IN ALL GROUND FLOOR UNITS.

-TYPE 'B' ACCESSIBLE DWELLING UNITS: (ANSI 117.1 SECTION 1004)

-EITHER ONE 'OPTION 'B' ACCESSIBLE' BATHROOM OR
ALL NEED TO BE 'OPTION 'A' ACCESSIBLE' FHA 7.36 & 7.37.

-MIRRORS ABOVE THE LAVATORIES SHALL HAVE THE BOTTOM EDGE OF THE REFLECTING SURFACE 40" MAX. ABOVE THE FLOOR.

-THE TOP OF THE WATER CLOSET SEAT SHALL BE BETWEEN 15" AND 19" ABOVE FINISH FLOOR.

-WATER CLOSETS SHOULD BE CENTERED ON 36". 18" FROM WALL.

-U-SHAPED KITCHEN SHALL HAVE 60" MIN. BETWEEN OPPOSING COUNTER TOPS AND APPLIANCES. ALTERNATE SHAPED KITCHENS SHALL HAVE A CLEAR SPACE OF 40" BETWEEN OPPOSING COUNTER TOPS AND APPLIANCES. SECTION 1004.12

-A CLEAR FLOOR SPACE, POSITIONED FOR PARALLEL OR FORWARD AND CENTERED, SHALL BE PROVIDED AT EACH KITCHEN APPLIANCE AND FIXTURE. SECTION 1004.12.2

-ACCESSIBLE ROUTES REQUIRE ROUTES TO ANY AND ALL PUBLIC AND COMMON AREAS (ALL FACILITIES, ELEMENTS OUTSIDE, MAILBOXES, SITE FURNISHINGS, OUTSIDE STORAGE AREAS, REFUSE DISPOSAL AREAS, PLAYFIELDS, AMPHITHEATERS, PICNIC SITES, SWIMMING POOLS, SUN DECKS, TENNIS COURTS, CLUBHOUSES, PLAYGROUND, GAZEBOS, PARKING AREA, SIDEWALKS, ALL OR PARTS OF NATURE TRAILS AND JOGGING PATHS.

-36" MINIMUM FOR ACCESSIBLE ROUTE.

-30" X 48" CLEAR FLOOR SPACE CENTERED ON WASHER AND DRYER.

-ALL ENTRY DOORS SHALL REQUIRE 18" CLEAR ON PULL SIDE OF DOOR AND 12" CLEAR ON THE PUSH SIDE OF THE DOOR. ANSI 404

-5% OF THE UNITS IN THE COMPLEX ARE REQUIRED TO BE TYPE 'A' UNITS ON GROUND FLOOR. ALL OTHER GROUND FLOOR UNITS ARE TYPE 'B'.

TYPE 'A' ACCESSIBLE DWELING UNITS (ANSI 117.1 SECTION 1003)

-ALL DOORS SHALL HAVE 18" CLEAR ON PULL SIDE OF DOOR. AND 12 CLEAR ON THE PUSH SIDE OF THE DOOR IF CLOSER IS INSTALLED. ANSI 404

-A CLEAR FLOOR SPACE COMPLYING WITH SECTION 305 SHALL BE PROVIDED AT ALL APPLIANCES AND FIXTURES.

-ALL TYPE 'A UNITS REQUIRE 34" COUNTER HEIGHTS, FROM TOP OF SINK RIM TO FINISH FLOOR.

-WHERE THERE ARE NO OBSTRUCTIONS TO INTERFERE WITH THE REACH OF A PERSON, CONTROLS AND OUTLETS SHALL BE MOUNTED IN A RANGE OF 15" FROM FINISH FLOOR TO 48" ABOVE FINIS FLOOR IN ACCORDANCE WITH ANSI 117.1, SECTION 308.

-30" OF COUNTER SHALL BE DEDICATED TO WORKING SURFACES.

-WORK SURFACE HEIGHT SHALL BE BASED ON THE TOP OF THE SINK RIM AT A MAX. HEIGHT OF 34" ABOVE FINISH FLOOR. A KNEE SPACE OF 30" IN LENGTH SHALL BE PROVIDED IN AT LEAST ONE SECTION OF THE KITCHEN COUNTER TOP.

-REMOVABLE CABINETS MAY BE INSTALLED UNDER THE KITCHEN SINK PROVIDED THEY CAN BE REMOVED WITH OUT REMOVING THE SINK AND THE WALL BEHIND AND FLOOR ARE FINISHED.

-RANGE HOOD CONTROLS SHALL BE MOUNTED A MAX OF 46" AFF.

REVISIONS

PROPOSED 18 UNIT BUILDING FOR:
LEGACY VILLAS
COUNRTY VISTA ROAD, LIBERTY LAKE, WA

WYATT ARCHITECTS AND ASSOCIATES
JAMES A. McARTHUR, A.I.A.
4205 South Crestline
Spokane, WA 99203
Phone: 509-327-7943 / Fax: 509-327-7999
jallanmcarthur@gmail.com
Project Manager:
Lee J. Schwatrzenburg
PO Box 141713
Spokane Valley, WA 99214
Phone: 509-928-1860
lee@wyattarchitects.com

SHEET TITLE: NOTES
DRAWN BY: LJS
PROJECT: 15:26
DATE: 6/20/2016
SHEET NO. A0.2

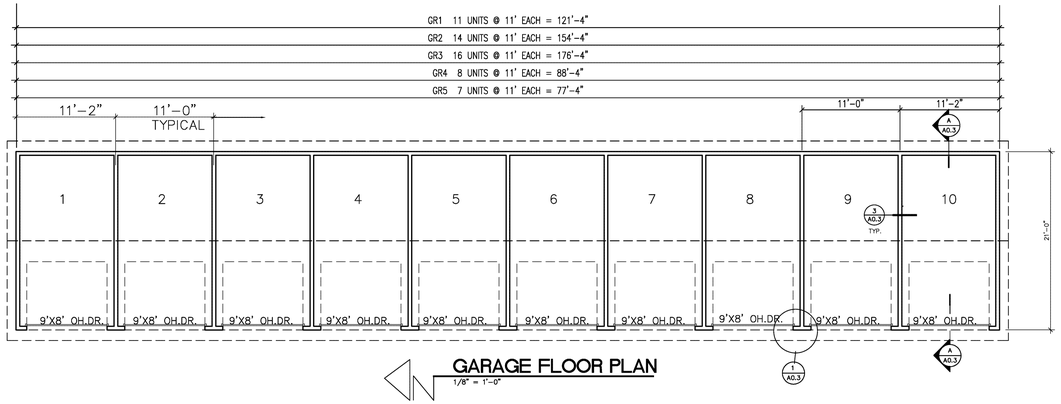

GARAGE FLOOR PLAN
1/8" = 1'-0"

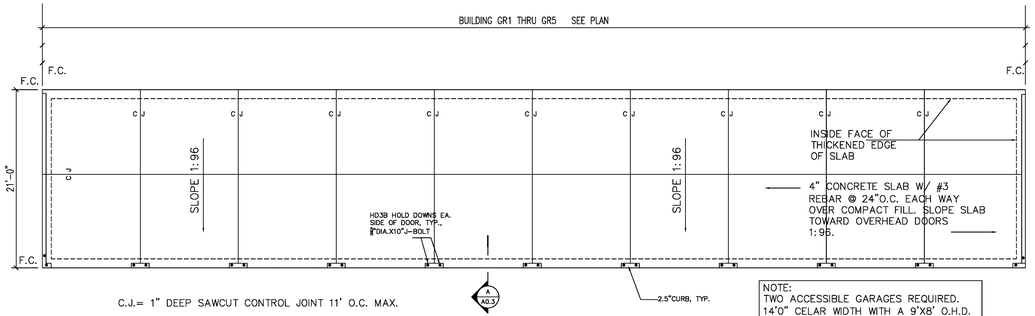

FOUNDATION PLAN
1/8" = 1'-0"

NOTE:
TWO ACCESSIBLE GARAGES REQUIRED.
14'0" CELAR WIDTH WITH A 9'X8' O.H.D.
AND A 3'X6'8" MAN DOOR
SEE SITE PLAN FOR LOCATION

INSTALL GARAGE DOOR CONTROL AT 46" AFF. WITH 5' SQ. CLEAR FLOOR AT CONTROL. PROVIDE REMOTE CONTROL UNIT FOR ACCESSIBLE GARAGE DOOR.

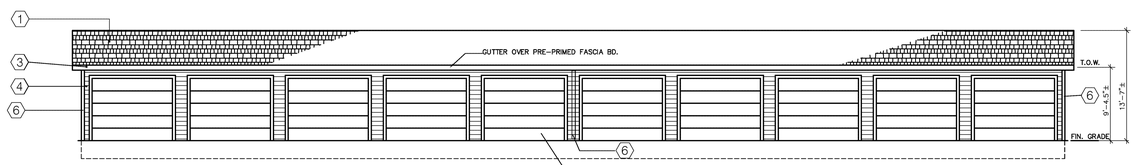

WEST ELEVATION
1/8" = 1'-0"

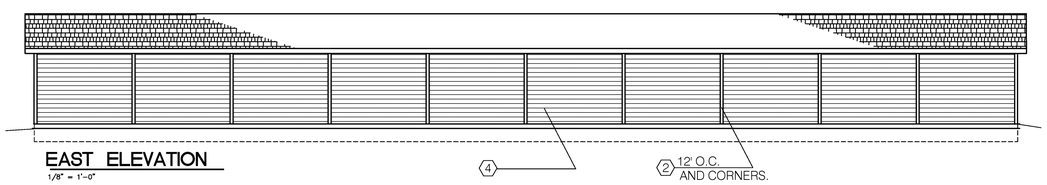

EAST ELEVATION
1/8" = 1'-0"

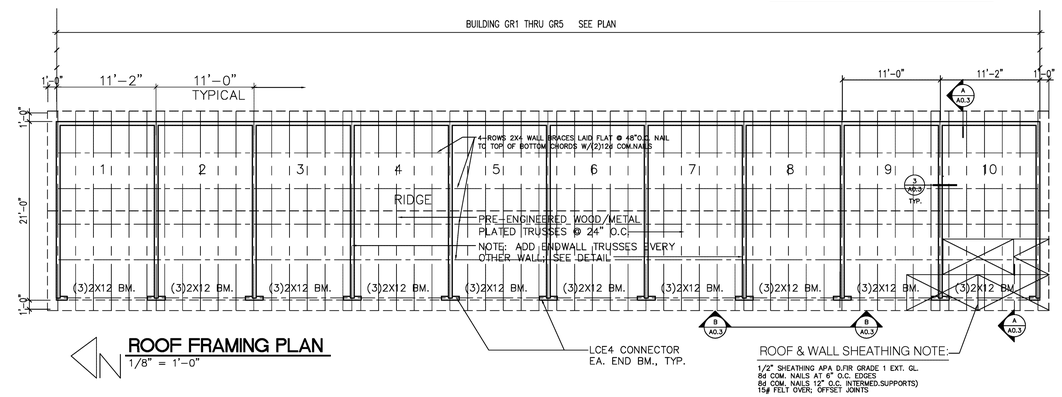

ROOF FRAMING PLAN
1/8" = 1'-0"

ROOF & WALL SHEATHING NOTE:-
1/2" SHEATHING APA D.FIR GRADE 1 EXT. GL.
8d COM. NAILS AT 6" O.C. EDGES
8d COM. NAILS 12" O.C. INTERMED.SUPPORTS)
15# FELT OVER; OFFSET JOINTS

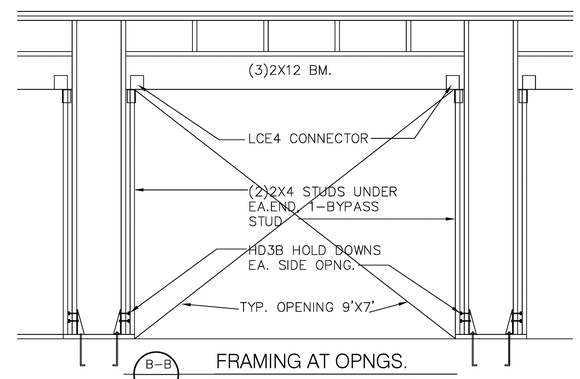

B-B / A0.3 FRAMING AT OPNGS.
$\frac{1}{2}$" = 1'-0" 10-THUS

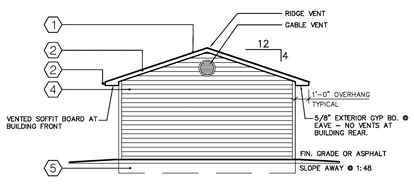

GARAGE NORTH AND SOUTH ELEVATIONS
1/8" = 1'-0"

KEY :

1. COMPOSITION ROOFING OVER FELT PAPER
2. 4" TRIM
3. RAIN GUTTER
4. SIDING OVER BLDG. PAPER
5. FOOTINGS & FOUNDATION
6. 4" DOWNSPOUT

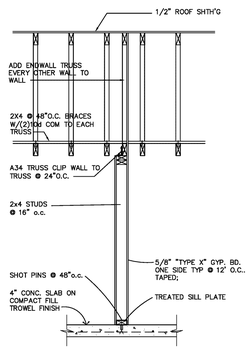

3 / A0.3 TYP. INTERIOR PARTITION
SCALE : 1/2"= 1'-0"

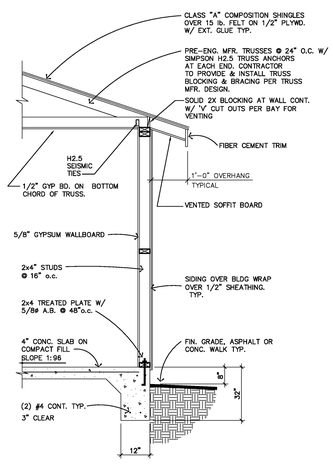

2 / A0.3 WALL SECTION @ GARAGE
SCALE : 1/2" = 1'-0"

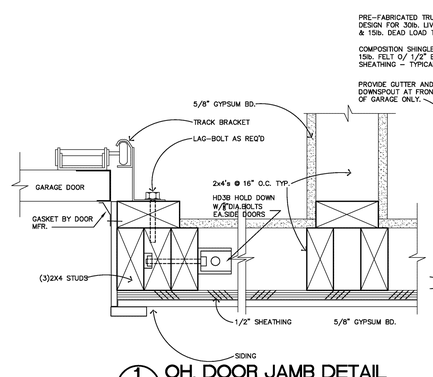

1 / A0.3 OH. DOOR JAMB DETAIL
SCALE : 3" = 1'-0"

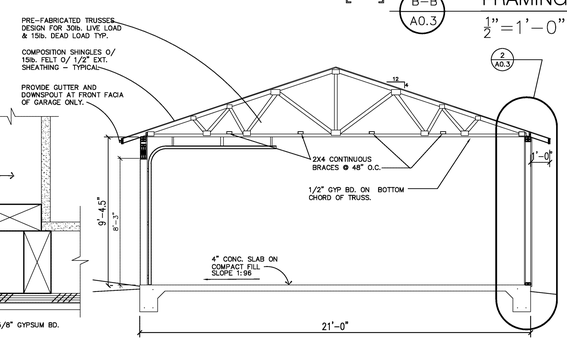

A-A / A0.3 TYPICAL GARAGE SECTION A-A
1/4" = 1'-0"

CONTRACTOR SHALL VERIFY ALL EXISTING DIMENSIONS AND CONDITIONS BEFORE ORDERING MATERIALS OR BEGINNING WORK. REPORT ALL INCONSISTENCIES TO ARCHITECT PRIOR TO PROCEEDING WITH WORK. TYP.

REVISIONS

PROPOSED GARAGE BUILDING FOR:
LEGACY VILLAS
COUNRTY VISTA ROAD, LIBERTY LAKE, WA

WYATT ARCHITECTS AND ASSOCIATES
JAMES A. McARTHUR, A.I.A.
4205 South Crestline
Spokane, WA 99203
Phone 509-327-7940 / Fax 509-327-7989
jaMcarthur@wyattarchitects.com
Project Manager:
Lee Swyter
PO Box 141713
Spokane Valley, WA 99214
Phone 509-928-9276
lee@swyterchitects.com

SHEET TITLE:	GARAGE PLAN
DRAWN BY:	LJS
PROJECT:	15:26
DATE:	6/20/2016
SHEET NO.	A0.3

BUILDING CODE SUMMARY WORKSHEET - BUILDING 'W' - 3 STORY MULTI-FAMILY

PROJECT NAME: SPRAGUE APARTMENTS

BUILDING CODE EDITION 2012 IBC

SECTION 1 - BUILDING USE OR OCCUPANCY

Identify all use and occupancy classification group (s) in the Building (i.e. B, M, R-2, A-3, ect.):	U	R-2			
Residential Building -Multi-Family		X			
Private Garages	X				

List all occupancy seperation fire barrier ratings required (i.e.B to S-2 = 2hr), IBC 508	
Include both horizontal and vertical seperations	N/A
And	
Provide mixed use ratio calculations per 508	N/A
Or	
Building is constructed per IBC 508.3.2 for Non-Seperated Uses or IBC 509 Special Provisions	N/A

Lists all incidental use areas (per IBC Table 508.2), floor area, and separation to be provided

Room or Area	Floor Area (sq.ft.)	Fire Seperation
N/A	N/A	N/A

List all accessory use areas not defined as Incidental Use, and fire barrier requirements (per IBC 508.3.1)

Room or Area	Floor Area (sq.ft.)	% floor area on story	Fire Seperation
Sprinkler Riser room (Residential Bldgs)	90.00	0.40%	N/A

SECTION 2 - BUILDING CONSTRUCTION

List Construction Type(s) used in the design (IA, IIB, VA, ect.):	VB, NFPA 13R Sprinklers

Building Height		
Type V-B (Residential Building 'J-K')	ALLOWED	PROPOSED
Building Height (per IBC Table 503)	40'	28.7
Number of Stories (per IBC Table 503)	3	2
Are Automatic Sprinklers used for Height Modifications? (per IBC Section 504)	NO	NO
Is there a basement?	NO	NO
Is an Automatic Sprinkler System Used in Place of 1 Hour Construction? (per IBC Table 601, Footnote e.) or other fire resistive construction per IBC 601 footnote c.?	NO	NO

Fire Resist. of Ext Walls Based on Fire Sep Distance (per IBC Tables 602 & 705.8

Building 'J-K'		Fire Separation Dist.			
List Wall Locations (i.e. North, South, ect.)		Provided	Range	Rating	Opening Protection (705.8)
North	Open Space	30'	10'<x<30'	0	NO LIMIT
East	Open Space	0'	10'<x<30' (VB)		No Limit
South	Open Space	30'	10'<x<30'	0	Not Required
West	Open Space	30'	10'<x<30'	0	No Limit

Fire Resistance Rating Requirements (per IBC Table 601)	Rating Required	Rating Provided	Assembly #
Structural Frame	0 hr	0 hr	See Sheets A3.0 & A3.1
Bearing Walls - Exterior	0 hr	0 hr	
Bearing Walls - Interior	0 hr	0 hr	
Walls Seperating Dwelling Units	1 hr	1 hr	GA FILE# WP 3370
Nonbearing Walls & Partitions- Interior	0 hr	0 hr	
Floors Seperating Dwelling Units	1 hr	1 hr	GA FILE# FC 5109
Floor Construction	0 hr	0 hr	
Roof Construction	0 hr	0 hr	

SECTION 3 - BUILDING AREA LIMITATIONS: "ALLOWABLE"

If there are multiple construction types, or if a fire wall divides the building, provide a separation analysis for each area. Repeat as necessary.

Area Limitations for Each Proposed IBC Use or Occupancy Group Occupancy	Occupancy 1	Occupancy 2
IBC Use / Occupancy Group	R-2	U
Table 503 Area Limitation (per IBC Table503) <At>	2 Stories @ 7000 sq.ft. +1 story per IBC 504.2 Sprinkler Inc.	1 Story @ 5500 sq.ft.
Frontage Area Increase Multiplier (per IBC 506.2) <If>	[F/P-0.25]W/30	[F/P-0.25]W/30
Automatic Sprinkler System Area Increase Multiplier (per IBC 506.3) <Is> (not allowed for IBC 903.3.1.2 NFPA 13R sprinklers)	0%	0%
Total ALLOWANCE Floor Area (Equation5-1 / IBC 506.1) <Aa>	At+[At x If] + [At x Is]	At+[At x If] + [At x Is]
Total ALLOWANCE Building Area	3 x Aa	3 x Aa
Does the Building Qualify for Unlimited Area (per IBC 507)	NO	

SECTION 3A - BUILDING AREAS "PROPOSED"

If there are multiple construction types, or if a fire wall divides the building, provide a separation analysis for each area. Repeat as necessary.

Area Limitations for Each Proposed IBC Use or Occupancy Group or Building Portion	Occupancy 1		Occupancy 2
IBC Use / Occupancy Group	R-2		U
Table 503 Area Limitation (per IBC Table503) <At>	7000		5500
Frontage Area Increase Multiplier (per IBC 506.2) <If>	.70		N/A
Building Perimeter w/ 20' open space <F>	431	NORTH - 183' SOUTH - 183' EAST - 0' WEST - 65'	0
Perimeter of building <P>	496		0
Width of open space <W>	30		N/A
Automatic Sprinkler System Area Increase Multiplier (per IBC 506.3) <Is> (not allowed for IBC 903.3.1.2 NFPA 13R sprinklers)	0		0
Total ALLOWABLE Floor Area (Equation 5-1 / IBC 506.1) <Aa>	11,332		5,500
Total ALLOWANCE Building Area	3 x Aa = 33,997		
Max. PROPOSED Floor Area	9,732		3,764
Total PROPOSED Building Area	3,764 +5,360 + 9,732 = 18,856		

SECTION 4 - OCCUPANT LOAD BUILDING EXITING

If there are multiple construction types, or if a fire wall divides the building, provide a separation analysis for each area. Repeat as necessary.

	Level 1	Level 2					
Floor Area (sf)	9,124	9,732		(L1 w/o Decks/Stor.)			
Occupant Load Factor (per Table 1004.1.1)	200	200					
Total Occupant Load Per Floor (1004.4)	46	49					

Number of Exits and Exit Widths From Each Level

	Number of Exits per 1015.1		Egress Components		Exit Width per 1005.1 w/ sprinklers			
					Stair Width (in.)(0.3)		Exit (in.)(0.2)	
	Req'd.	Prov.	Exit	Stairs	Req'd.	Prov.	Req'd.	Prov.
Level 1	2	4	4	0	0	0	9.2	36
Level 2	2	3	0	3	14.7	42	0	0

Section 1009.1 - Stairways serving an occupant load less than 50 shall have clear width of not less than 36 in.

Are Areas of Refuge Required	NO

ALLOWABLE FLOOR AREA:

TYPE V–B. – SPRINKLED (NFPA 13R)

$$I_f = [472/496 - 0.25]\ 30/30 = .61$$

$$A_t = 7{,}000$$

$$A_a = 7{,}000 + [7{,}000 \times .61] + [7{,}000 \times 0] = 11{,}332$$

$$A_a = 7{,}000 + [4{,}332] + [0] = 11{,}332$$

ALLOWABLE/ FLOOR

REVISIONS

PROPOSED 18 UNIT BUILDING FOR:

LEGACY VILLAS

COUNTRY VISTA ROAD, LIBERTY LAKE, WA

WYATT ARCHITECTS AND ASSOCIATES

JAMES A. McARTHUR, A.I.A.

4205 South Crestline
Spokane, WA 99203
Phone 509-327-7900 / Fax 509-327-7999
jaMcarthur@wyattarchitects.com

Project Manager:
Lee Wyatt
P.O. Box 141713
Spokane Valley, WA 99214
leewyatt@wyattarchitects.com

SHEET TITLE:
18 UNIT CODE SHEET

DRAWN BY: LJS

PROJECT: 15:26

DATE: 6/20/2016

SHEET NO. A0.4

PROJECT INFORMATION

Name of Project: LEGACY VILLAS APARTMENTS
Date: 6/15/2016
Street Address: (TBD) COUNTRY VISTA DRIVE - LIBERTY LAKE, WA
Parcel Numbers: 55156.9202 & 55161.9203

(name) (address) (phone)
OWNER: Legacy Villas LLC PO Box 949 Hayden, ID 83835 208/765-5059
CONTRACTOR: Copper Basin PO Box 949 Hayden, ID 83835 208/765-5059
Contact Person: Jeremy Hopson PO Box 949 Hayden, ID 83835 208/765-5059
Project is: APARTMENT COMPLEX

Existing lot/building use: Vacant
Proposed Use: RESIDENTIAL
Occupancy Group: R-2
Construction Type Required: V-B
Auto Fire-extinguishing System: NFPA 13R
Actual Construction Type: V-B

Allowable Height: 40'
Allowable Area: 7,000 S.F.
Actual Building Height and no. of stories: 33'6" feet, TWO stories;
Ground floor area and occupant load: Area: 3,980sf - 20 occupants -Per 6-Plex,
Total new floor area: 8,146sf Per 6-Plex; Total existing floor area: N/A;
New construction Valuation: $970,000 6-PLEX;
ZONING:
Hazard Area? (Airport, Slide, Flood): N/A
Any Previous Environmental Declarations on this site: N/A
Use Zone of lot: M-2
Use Zone of adjacent lots: North: M-2, South: M-2, East: M-2, West: M-2
Setbacks & Yards: North: 25', South: 10'; East: 5'; West: 10'

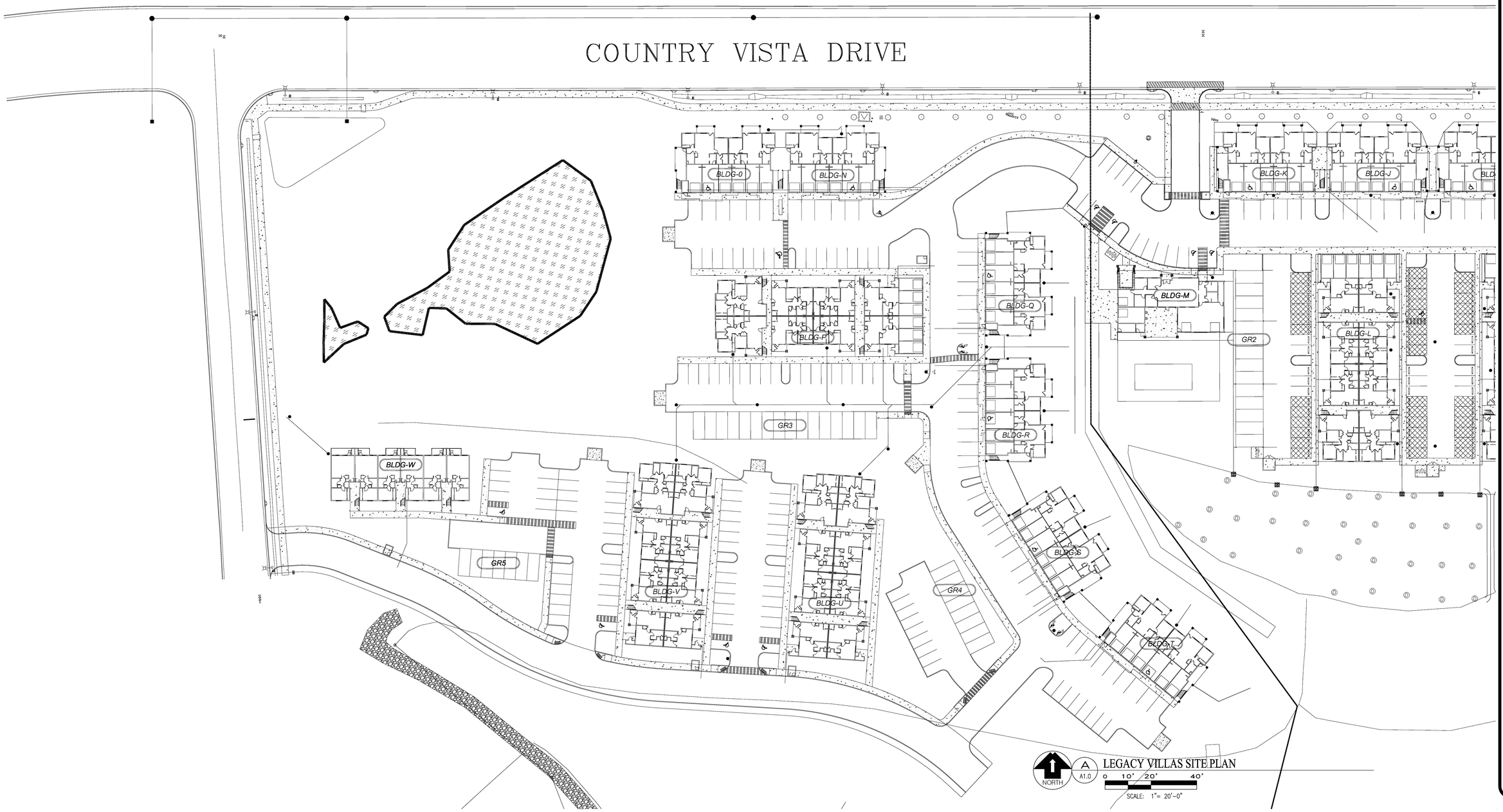

LEGACY VILLAS SITE PLAN

REVISIONS

PROPOSED 18 UNIT BUILDING FOR:
LEGACY VILLAS
COUNTRY VISTA ROAD, LIBERTY LAKE, WA

WYATT ARCHITECTS AND ASSOCIATES
JAMES A. McARTHUR, A.I.A.
4205 South Crestline
Spokane, WA 99203
Phone 509-327-7949 / Fax 326-327-7999
jaleonard@wyattarchitects.com
Project Manager:
Lee Wyatt Leonard
P.O. Box 141713
Spokane Valley, WA 99214
Phone 509-926-9000
lee@wyattarchitects.com

SHEET TITLE:	SITE PLAN
DRAWN BY:	LJS
PROJECT:	15:26
DATE:	6/20/2016
SHEET NO.	A1.0

BLOCKING TO BE PROVIDED AS REQUIRED IN ALL GROUND FLOOR UNITS FOR FUTURE GRAB BARS AT THE WATER CLOSETS AND TUB/SHOWERS. REFER TO SHEET A0.2 FOR GRAB BAR LOCATIONS.

ALL GROUND FLOOR ENTRY DOORS SHALL HAVE A CLEAR FLOOR SPACE OF 18" BEYOND THE STRIKE JAMB WHEN A DOOR MUST BE PULLED TO BE OPENED.

ALL GROUND FLOOR ENTRY DOORS SHALL HAVE A CLEAR FLOOR SPACE OF 12" BEYOND THE STRIKE JAMB WHEN A DOOR MUST BE PUSHED TO BE OPENED.

ALL GROUND FLOOR UNITS SHALL HAVE A MAXIMUM HEIGHT OF 34" TO TOP OF LAVATORY RIM IN THE BATHING ROOMS PER SECTION 1004.11.3.2.1.1.

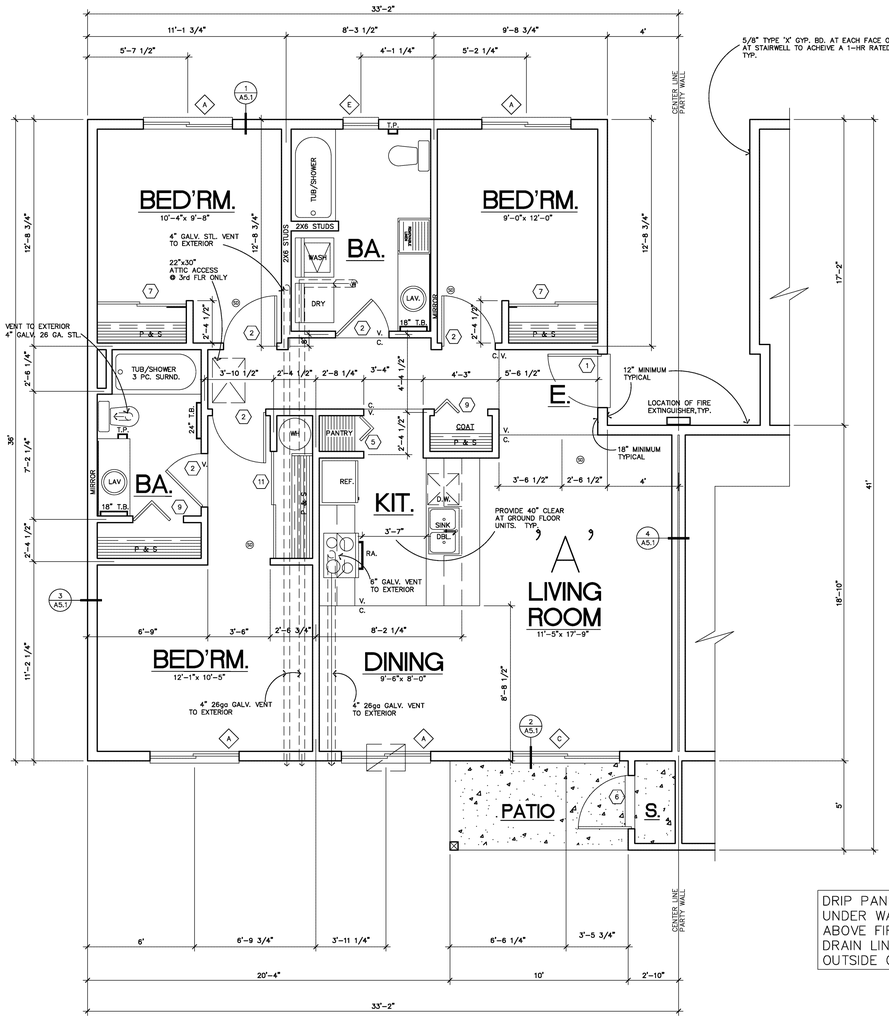

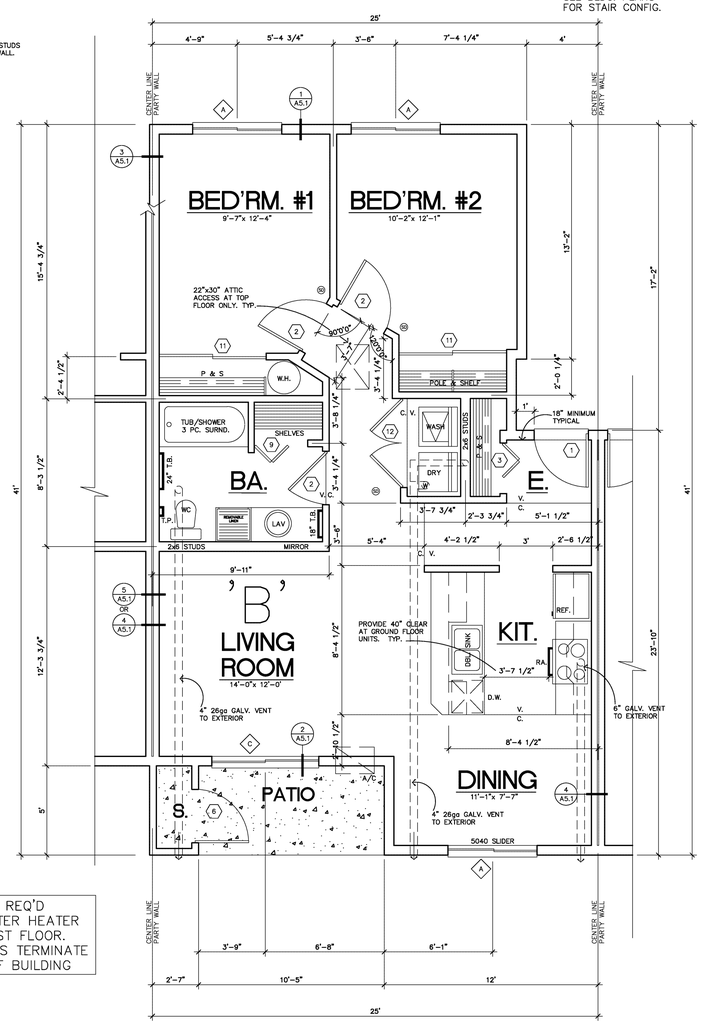

NOTE:
SEE BLDG. PLANS FOR STAIR CONFIG.

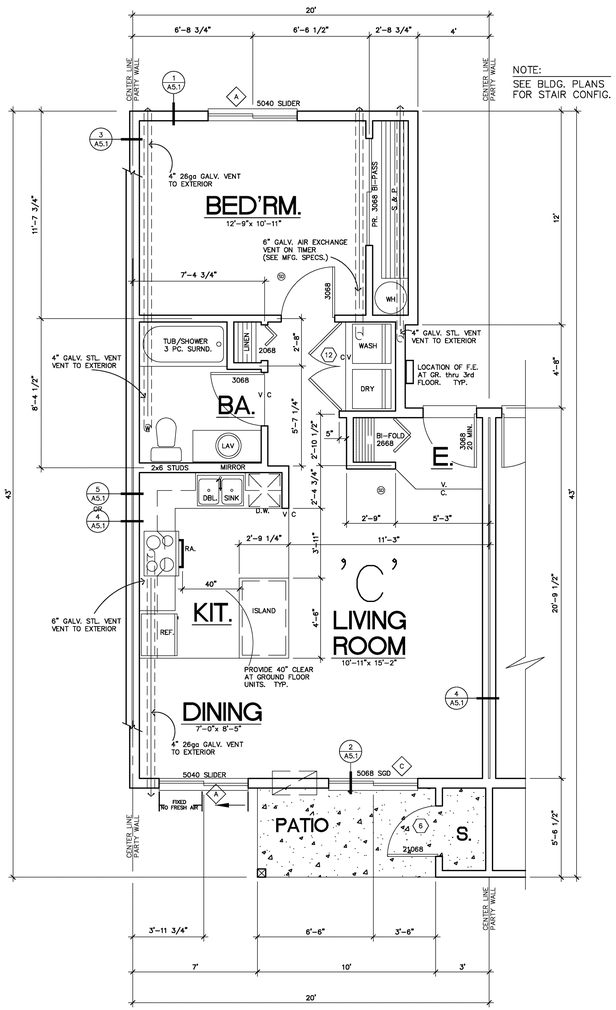

NOTE:
SEE BLDG. PLANS FOR STAIR CONFIG.

'A' - THREE BEDROOM / TWO BATH 1,125 S.F.

SCALE : 1/4" = 1'-0"

'B' - TWO BEDROOM / ONE BATH 889 S.F.

SCALE : 1/4" = 1'-0"

'C' - ONE BEDROOM UNIT 690 S.F.

SCALE : 1/4" = 1'-0"

NOTE :

UNIT ENTRY DOORS TO BE 3068
20 MINUTE WITH SELF-CLOSING DEVICE.

INTERIOR DOORS ON THE 2ND AND 3RD FLOORS SHALL BE 2'6"x 6'8" PER OWNER.

SC = SMOKE/CO DETECTOR COMBO

WH – WHOLE HOUSE VENT

REVISIONS

PROPOSED 18 UNIT BUILDING FOR:

LEGACY VILLAS

COUNRTY VISTA ROAD, LIBERTY LAKE, WA

WYATT ARCHITECTS AND ASSOCIATES

JAMES A. McARTHUR, A.I.A.

Project Manager:
Lee Wyatt Harzenburg
PO Box 141713
Spokane Valley, WA 99214
(509) 928-9484
leewyattarchitects.com

4206 South Crestline
Spokane, WA 99203
Phone 509-327-7368 / Fax 509-327-7369
jaimcarch@hotmail.com

SHEET TITLE: UNIT PLANS

DRAWN BY: LJS

PROJECT: 15:26

DATE: 6/20/2016

SHEET NO. A2.0

FIRE NOTES

FIRE EXTINGUISHERS SHALL BE LOCATED WITHIN 75 FOOT TRAVEL DISTANCE FROM ALL AREAS OF THE BUILDING, AND SHALL PROTECT A MAXIMUM OF 3,000 SQUARE FEET.

FIRE EXTINGUISHERS SHALL BE MOUNTED ON EITHER A BRACKET OR WITHIN AN APPROVED STORAGE CABINET. BREAK GLASS CABINET OPENINGS SHALL BE PROVIDED WITH AN APPROVED HAMMER OR SIMILAR DEVICE MOUNTED DIRECTLY TO CABINET. FIRE EXTINGUISHERS SHALL BE MOUNTED AT A HEIGHT BETWEEN THREE FEET AND FIVE FEET FROM THE FLOOR.

FIRE EXTINGUISHERS SHALL HAVE A SERVICE TAG AFFIXED TO THEM WHICH PROVIDES PROOF THAT THEY HAVE BEEN INSPECTED AND SERVICED BY A LICENSED FIRE EXTINGUISHER CONCERN. EXTINGUISHERS SHALL BE SERVICED ANNUALLY AS REQUIRED BY CALIFORNIA STATE FIRE MARSHAL STANDARDS.

GENERAL NOTES FOR ACCESSIBLE UNITS

WATER CLOSET AND OTHER ACCESSORIES INSIDE THE TOILET FACILITIES MUST MEET THE REQUIREMENTS OF THE WASHINGTON STATE REGULATIONS FOR BARRIER–FREE FACILITIES.

LOCKSETS AND LATCHSETS SHALL HAVE A LEVER PUSH OPERATED, OR OTHER DEVICES WHICH WILL PERMIT OPERATION BY WRIST OR ARM PRESSURE. HEIGHT OF CENTER SPINDLE OR ACTUATING DEVICE SHALL BE 36 TO 42 INCHES ABOVE THE FLOOR.

BLOCKING TO BE PROVIDED AS REQUIRED IN ALL GROUND FLOOR UNITS FOR FUTURE GRAB BARS AT THE WATER CLOSETS AND TUB/SHOWERS. REFER TO SHEET A0.2 FOR GRAB BAR LOCATIONS.

ALL GROUND FLOOR ENTRY DOORS SHALL HAVE A CLEAR FLOOR SPACE OF 18" BEYOND THE STRIKE JAMB WHEN A DOOR MUST BE PULLED TO BE OPENED.

ALL GROUND FLOOR ENTRY DOORS SHALL HAVE A CLEAR FLOOR SPACE OF 12" BEYOND THE STRIKE JAMB WHEN A DOOR MUST BE PUSHED TO BE OPENED.

ALL GROUND FLOOR UNITS SHALL HAVE A MAXIMUM HEIGHT OF 34" TO TOP OF LAVATORY RIM IN THE BATHING ROOMS PER SECTION 1004.11.3.2.1.1.

TOTAL DEPTH OF CLEAR SPACE BENEATH A LAVATORY SHALL BE NOT LESS THAN 17", KNEE CLEARANCE SHALL BE NOT LESS THAN 29" IN HEIGHT AND 30" IN WIDTH.

FAUCET CONTROL HANDELS SHALL BE LOCATED NOT MORE THAN 17" FROM THE FRONT EDGE OF THE LAVATORY, SINK OR COUNTER.

GRAB BARS SHALL HAVE OUTSIDE DIAMETER OF NOT LESS THAN 1–1/4" NOR MORE THAN 1–1/2" AND SHALL PROVIDE A CLEARANCE OF 1–1/2" BETWEEN THE GRAB BAR AND THE WALL. AND SHALL BE MOUNTED BETWEEN 33" – 36" TO CENTER OF GRAB BAR FROM FIN. FLR.

THE OPERABLE PARTS SHALL BE INSPECTED FOR COMPLIANCE WITH ICC A117.1 SECTIONS 1003.9 AND 1004.9, INCLUDING LAUNDRY, KITCHEN AND HVAC CONTROLS.

THE MAXIMUM THRESHOLD HEIGHT SHALL BE 1/2" IN ALL 'A' & 'B' TYPE ACCESSIBLE UNITS. CHANGES IN LEVEL GREATER THAN 1/4" IN HEIGHT AND NOT MORE THAN 1/2" MAXIMUM IN HEIGHT SHALL BE BEVELED WITH A SLOPE NOT STEEPER THAN 1:2.

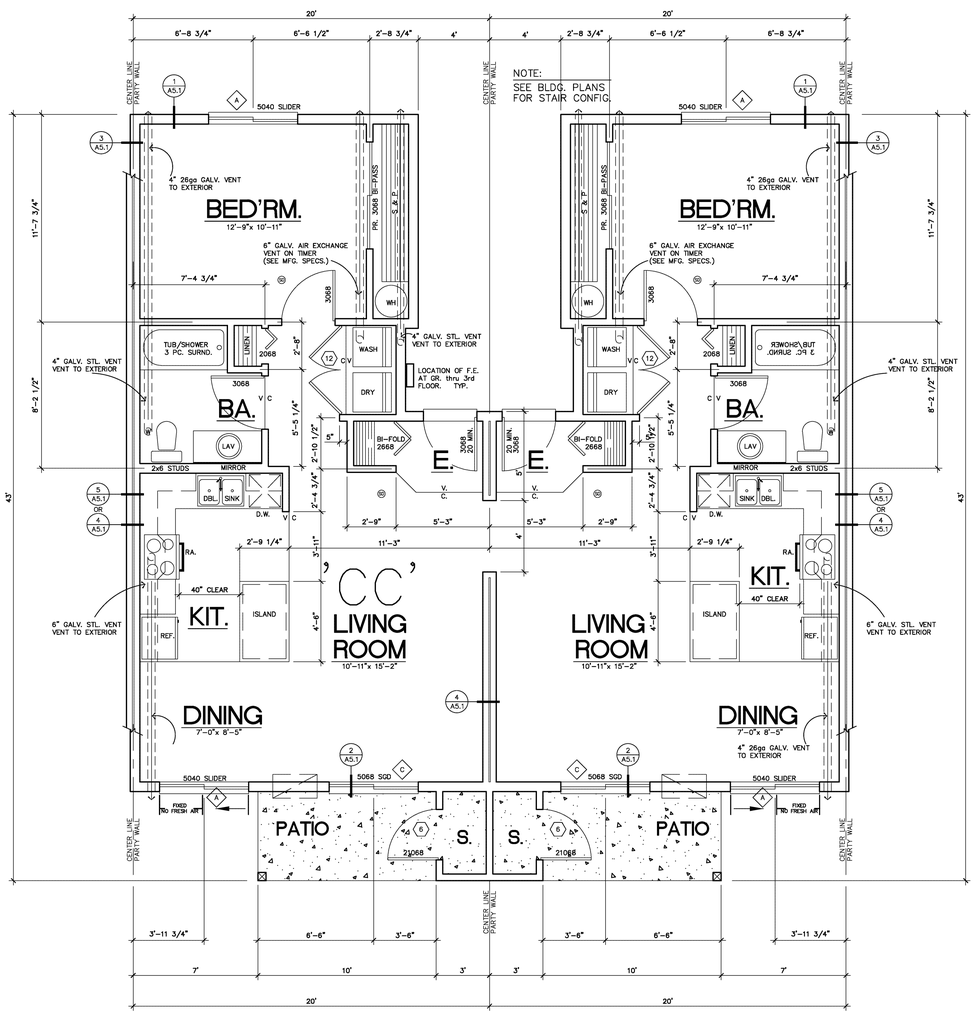

'CC' – TWO BEDROOM SUITE 1,380 S.F.

SECOND AND THIRD FLOOR SCALE : 1/4" = 1'-0"

DOOR SCHEDULE

SEE DOOR LEGEND

DOOR MARK	1. DOOR SIZE	2. TYPE	3. THICKNESS	4. CONSTRUCTION	5. FACING/FINISH	6. GLASS	7. RATING	8. FRAME TYPE	9. FRAME FINISH	REMARKS
1	3'-0" X 6'-8"	A	1-3/4	ISD	WP	–	20	B	WP	SMOKE SEAL – AUTO CLOSER
2	3'-0" X 6'-8"	A	1-3/4	HC	FF	–	–	A	WP	
3	2'-6" X 6'-8"	A	1-1/8	HC	FF	–	–	–	–	BI-FOLD DOOR
4	2'-10" X 6'-8"	A	1-3/4	HC	FF	–	–	A	WP	32" CLEAR MIN.
5	2'-0" X 6'-8"	A	1-1/8	HC	FF	–	–	–	–	BI-FOLD DOOR
6	3'-0" X 6'-8"	A	1-3/4	ISD	WP	–	–	B	WP	
7	5'-0" X 6'-8"	A	1-1/8	HC	FF	–	–	–	–	BI-PASS DOORS
8	2'-6" X 6'-8"	A	1-3/4	ISD	WP	–	–	B	WP	FIRE RISER ROOM
9	3'-0" X 6'-8"	A	1-1/8	HC	FF	–	–	–	–	BI-FOLD DOOR
10	N/A									
11	6'-0" X 6'-8"	A	1-1/8	HC	FF	–	–	–	–	PAIR OF 3' BI-PASS
12	5'-0" X 6'-8"	A	1-1/8	HC	FF	–	–	–	–	PAIR OF 2'6"
13	2'-6" X 6'-8"	A	1-1/8	HC	FF	–	–	A	WP	

DOOR LEGEND

2. TYPE:
SEE BELOW

4. CONSTRUCTION:
ISD = INSULATED STEEL DOOR
HC = HOLLOW CORE WOOD
SC = SOLID CORE WOOD
AL = ALUMINUM STOREFRONT

5./9. FACING/FINISH:
MP = METAL PAINTED
WP = WOOD PAINTED
FF = FACTORY FINISH

6. GLASS TYPE:
IT = INSULATED TEMPERED PLATE

8. DOOR FRAME:
VN = VINYL
WD = WOOD
AL = ALUMINUM

NOTE: ALL EXTERIOR DOORS TO BE INSULATED WITH A U–VALUE OF .20 OR LESS.

WINDOW SCHEDULE

WINDOW HEAD SHALL MATCH DOOR HEAD HEIGHT.

ALL GLAZING INCLUDES LOW-E

WINDOW MARK	ROUGH OPENING WIDTH X HEIGHT	FRESH–AIR VENT	GLASS TYPE	FRAME	SILL HEIGHT (A.F.F.)	REMARKS
A	5'-0" x 4'-0"	X	IN	VN	2'-8"±	SLIDER-EGRESS
B	5'-0" X 3'-0"	–	IN	VN	3'-8"±	GARDEN WINDOW
C	6'-0" X 6'-8"	–	IN	VN	--	S.G.D. ACCESSIBL (32" CLEAR OPENING) TEMP. & INSULATED GLASS

WINDOW LEGEND

GLASS TYPE:
FG = STANDARD FLOAT GLASS
TP = TEMPERED
IT = INSULATED TEMPERED
IN = 1" INSULATED
OB = OBSCURED
FL = 'FIRE LITE' GLASS

FRAME MATERIAL:
MV = MANUFACTURED WOOD
CW = CUSTOM WOOD
VN = VINYL
AL = ALUMINUM

GLAZING IN FIXED OR OPERABLE PANELS WITHIN 24 INCHES OF EITHER VERTICAL SIDE OF THE DOOR SHALL BE SAFTY GLASS.

INSTALL WINDOVS AND SLIDING GLASS DOORS WITH A U-VALUE OF .33 OR LESS.

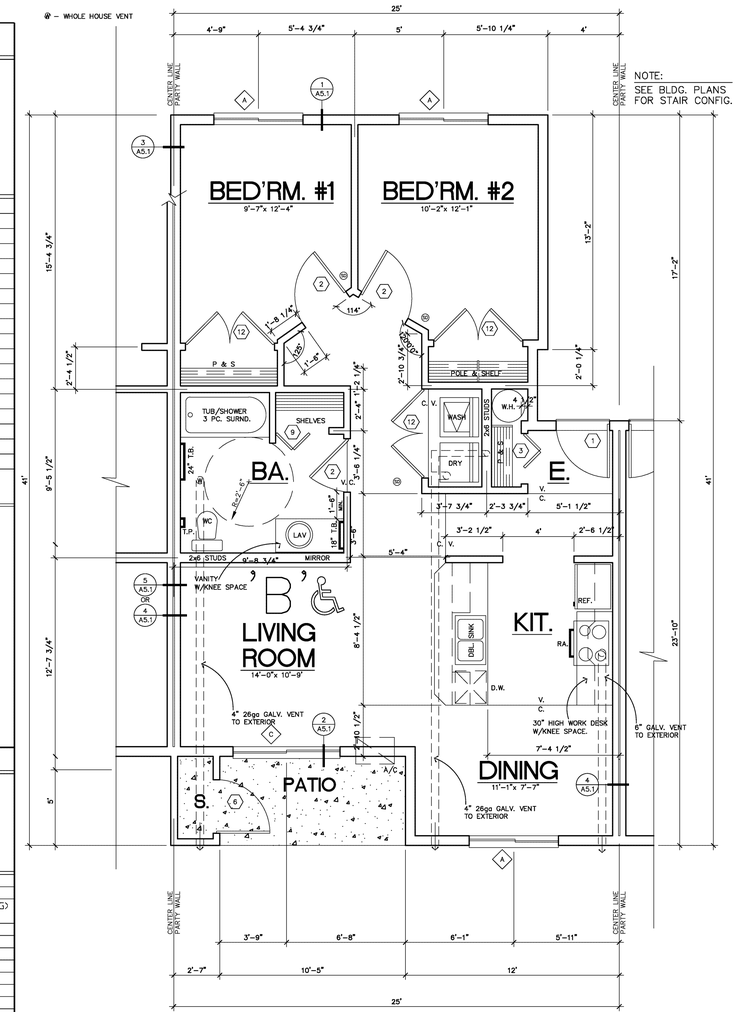

'C' – TWO BEDROOM / ONE BATH 889 S.F.

ACCESSIBLE SCALE : 1/4" = 1'-0"

REVISIONS

PROPOSED 18 UNIT BUILDING FOR:

LEGACY VILLAS

COUNRTY VISTA ROAD, LIBERTY LAKE, WA

WYATT ARCHITECTS AND ASSOCIATES
JAMES A. McARTHUR, A.I.A.
Project Manager:
Lee Wyatt Harrington
PO Box 141713
Spokane Valley, WA 99214
Phone 509-927-7963
lee@wyattarchitects.com
4205 South Crestline
Spokane, WA 99203
Phone 509-327-7963 / Fax 509-327-7989
jaimcarchitect@gmail.com

SHEET TITLE: UNIT PLAN

DRAWN BY: LJS

PROJECT: 15:26

DATE: 6/20/2016

SHEET NO. A2.1

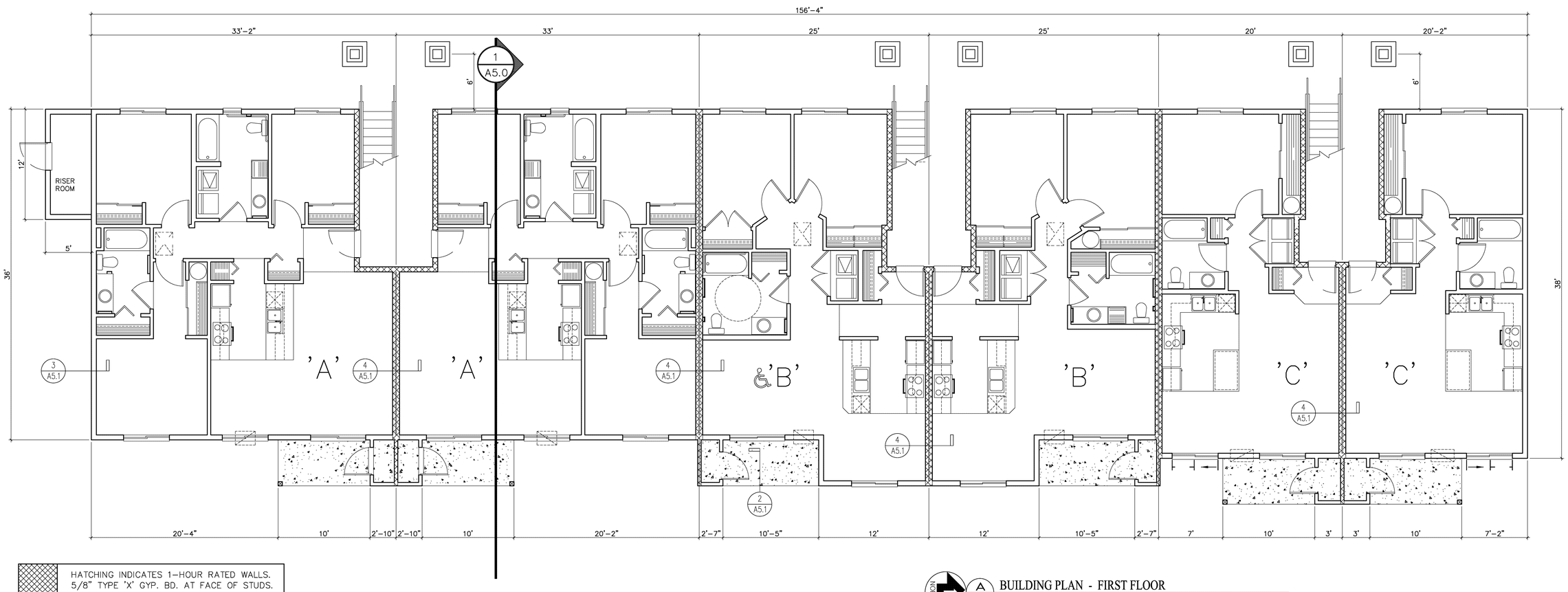

HATCHING INDICATES 1-HOUR RATED WALLS. 5/8" TYPE 'X' GYP. BD. AT FACE OF STUDS.

PROVIDE LIGHTING IN EACH STAIR WELL ON EACH FLOOR SET ON A PHOTO CELL.

Radon mitigation is required throughout the apartment building; provide plan details showing radon system design.

NORTH

A
A3.0

BUILDING PLAN - FIRST FLOOR

0 2'8" 5'4" 10'8"

SCALE: 3/16" = 1'-0"

REVISIONS

PROPOSED 18 UNIT BUILDING FOR:

LEGACY VILLAS

COUNRTY VISTA ROAD, LIBERTY LAKE, WA

WYATT ARCHITECTS AND ASSOCIATES

JAMES A. McARTHUR, A.I.A.

4205 South Crestline
Spokane, WA 99203
Phone 509-327-7541 Fax 326-327-7999
jaleemcarthur@gmail.com

Project Manager:
Lee Schwarzenburg
PO Box 141713
Spokane Valley,
Phone 509-928-9680
lee@wyattarchitects.com

SHEET TITLE:	BUILDING PLAN
DRAWN BY:	LJS
PROJECT:	15:26
DATE:	6/20/2016
SHEET NO.	A3.0

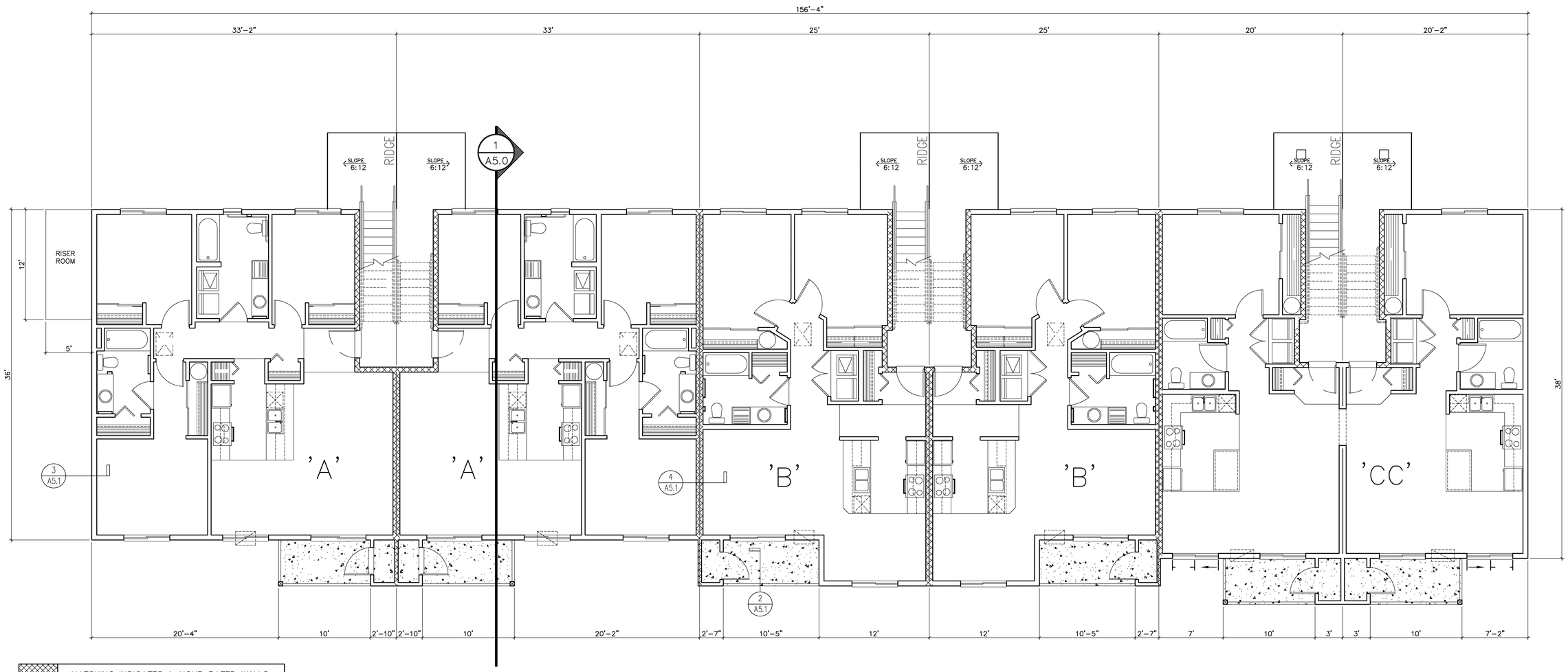

HATCHING INDICATES 1-HOUR RATED WALLS. 5/8" TYPE 'X' GYP. BD. AT FACE OF STUDS.

PROVIDE LIGHTING IN EACH STAIR WELL ON EACH FLOOR SET ON A PHOTO CELL.

NORTH

A / A3.1 BUILDING PLAN - SECOND FLOOR

0 2'8" 5'4" 10'8"

SCALE: 3/16" = 1'-0"

REVISIONS

PROPOSED 18 UNIT BUILDING FOR:

LEGACY VILLAS

COUNRTY VISTA ROAD, LIBERTY LAKE, WA

WYATT ARCHITECTS AND ASSOCIATES

JAMES A. McARTHUR, A.I.A.

4205 South Crestline
Spokane, WA 99203
Phone 509-327-7963 / Fax 509-327-7989
jaleonard@wyattarchitects.com

Project Manager:
Lee Schwarzenburg
PO Box 141713
Spokane Valley, WA 99214
Phone 509-928-9290
lee@wyattarchitects.com

SHEET TITLE:	BUILDING PLAN
DRAWN BY:	LJS
PROJECT:	15:26
DATE:	6/20/2016
SHEET NO.	A3.1

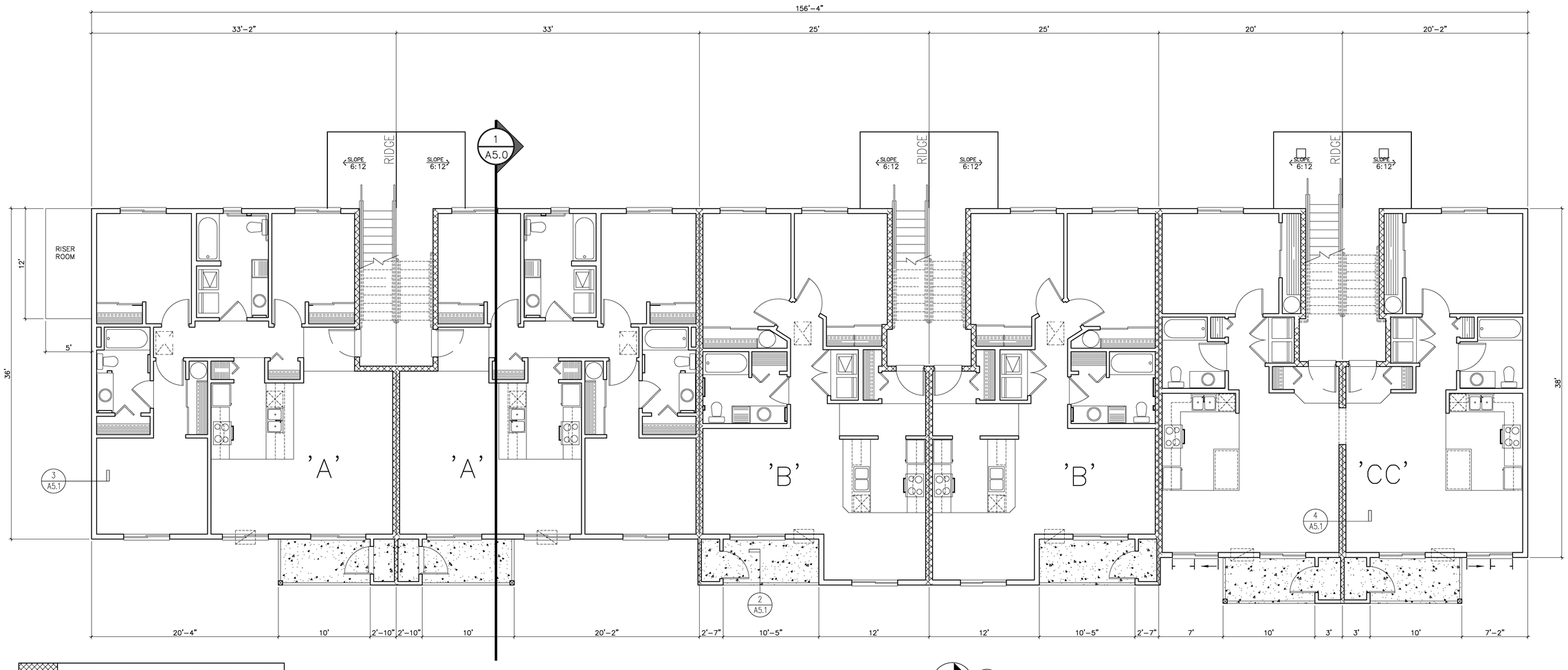

HATCHING INDICATES 1-HOUR RATED WALLS. 5/8" TYPE 'X' GYP. BD. AT FACE OF STUDS.

PROVIDE LIGHTING IN EACH STAIR WELL ON EACH FLOOR SET ON A PHOTO CELL.

NORTH

A A3.2 BUILDING PLAN - THIRD FLOOR

0 2'8" 5'4" 10'8"

SCALE: 3/16" = 1'-0"

REVISIONS

PROPOSED 18 UNIT BUILDING FOR:

LEGACY VILLAS

COUNTRY VISTA ROAD, LIBERTY LAKE, WA

WYATT ARCHITECTS AND ASSOCIATES

JAMES A. McARTHUR, A.I.A.

4205 South Crestline
Spokane, WA 99203
Phone 509-327-7840 Fax 509-327-7899
jaMcarthur@wyattarchitects.com

Project Manager:
Lee B. Schwartzenburg
PO Box 141713
Spokane Valley,
Washington 99214
lee@wyattarchitects.com

SHEET TITLE:	BUILDING PLAN
DRAWN BY:	LJS
PROJECT:	15:26
DATE:	6/20/2016
SHEET NO.	A3.2

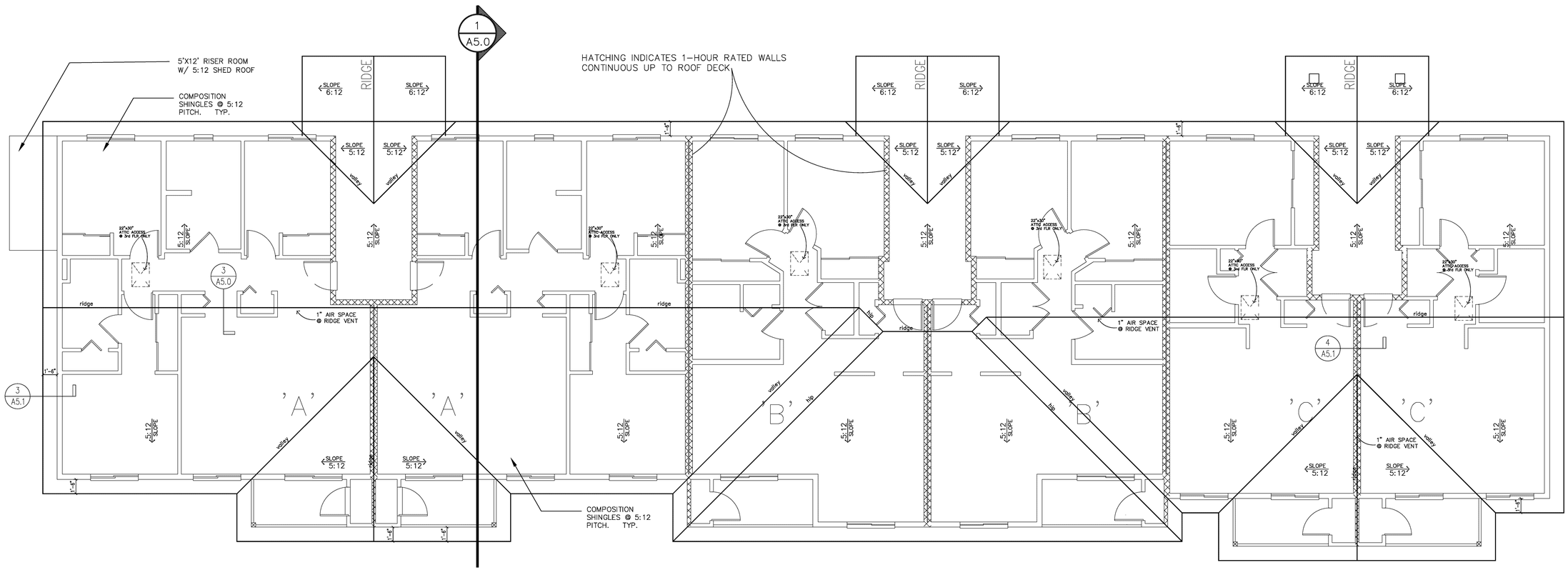

NORTH

A
A3.3

ROOF PLAN

0 2'8" 5'4" 10'8"

SCALE: 3/16" = 1'-0"

REVISIONS

PROPOSED 18 UNIT BUILDING FOR:

LEGACY VILLAS

COUNRTY VISTA ROAD, LIBERTY LAKE, WA

WYATT ARCHITECTS AND ASSOCIATES

JAMES A. McARTHUR, A.I.A.

4205 South Crestline
Spokane, WA 99203
Phone 509-327-7342 / Fax 509-327-7989
jaleemcarthur@gmail.com

Project Manager:
Lee Schwartzenburg
PO Box 141713
Spokane Valley, WA 99214
Phone 509-928-9600
lee@wyattarchitects.com

SHEET TITLE:	ROOF PLAN
DRAWN BY:	LJS
PROJECT:	15:26
DATE:	6/20/2016
SHEET NO.	A3.3

KEY

1. COMPOSITION SHINGLE ROOFING
2. 2x6 FASCIA - PAINTED
3. FIBER CEMENT CORNER TRIM
4. FIBER CEMENT LAP SIDING
5. THERMAL GLAZED WINDOWS
6. A/C UNIT
7. SURFACE MOUNT RAIN GUTTER (optional)
8. FOOTINGS & FOUNDATION

C A4.0 WEST ELEVATION

0 4' 8' 16'

SCALE: 1/8" = 1'-0"

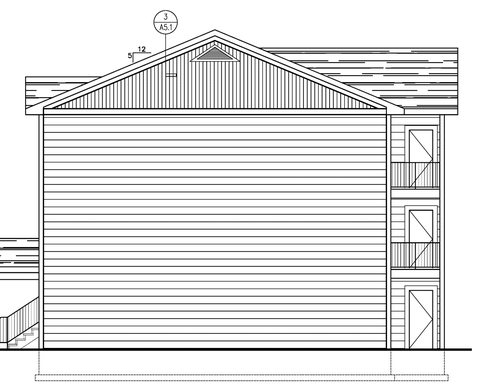

D A4.0 NORTH ELEVATION

0 4' 8' 16'

SCALE: 1/8" = 1'-0"

A A4.0 EAST ELEVATION

0 4' 8' 16'

SCALE: 1/8" = 1'-0"

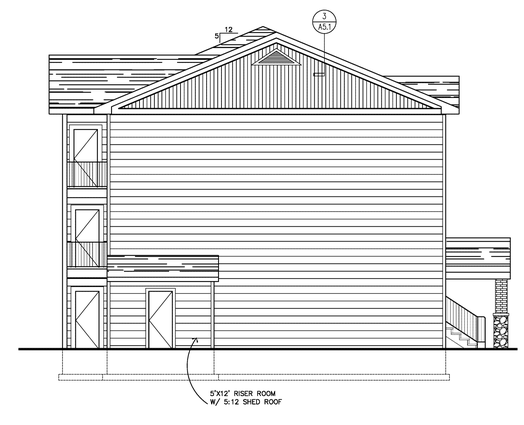

B A4.0 SOUTH ELEVATION

0 4' 8' 16'

SCALE: 1/8" = 1'-0"

REVISIONS

PROPOSED 18 UNIT BUILDING FOR:

LEGACY VILLAS

COUNRTY VISTA ROAD, LIBERTY LAKE, WA

WYATT ARCHITECTS AND ASSOCIATES

JAMES A. McARTHUR, A.I.A.

4205 South Cresline
Spokane, WA 99203
Phone 509-327-7547 Fax 326-327-7999
jaleemcarthur@gmail.com

Project Manager:
Lee Wyatt Zemburg
PO Box 141713
Spokane Valley, WA 99214
Phone 509-928-9000
lee@wyattarchitects.com

SHEET TITLE: ELEVATIONS

DRAWN BY: LJS

PROJECT: 15:26

DATE: 6/20/2016

SHEET NO. A4.0

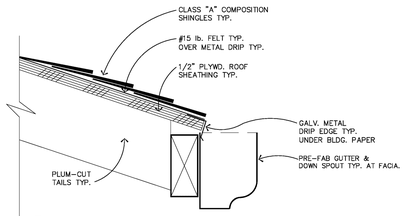

5 A5.0 FACIA DETAIL

0 2" 4" 8"

SCALE: 3"=1'-0"

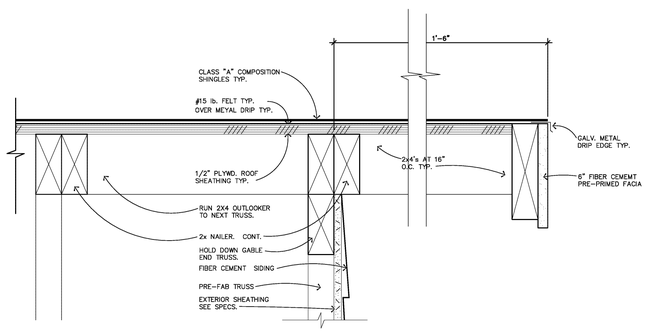

6 A5.0 GABLE END DETAIL

0 2" 4" 8"

SCALE: 3"=1'-0"

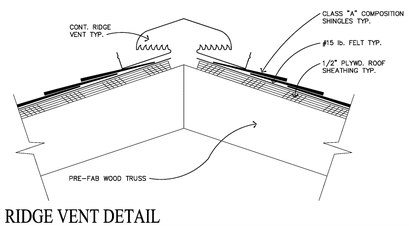

3 A5.0 RIDGE VENT DETAIL

0 2" 4" 8"

SCALE: 3"=1'-0"

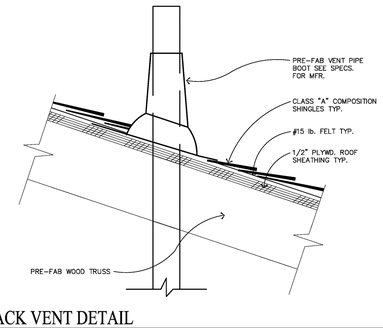

4 A5.0 STACK VENT DETAIL

0 2" 4" 8"

SCALE: 3"=1'-0"

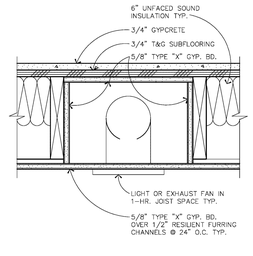

2 A5.0 1-HOUR CEILING PENETRATION DETAIL

0 4" 8" 1'4"

SCALE: SCALE: 1-1/2" = 1'-0"

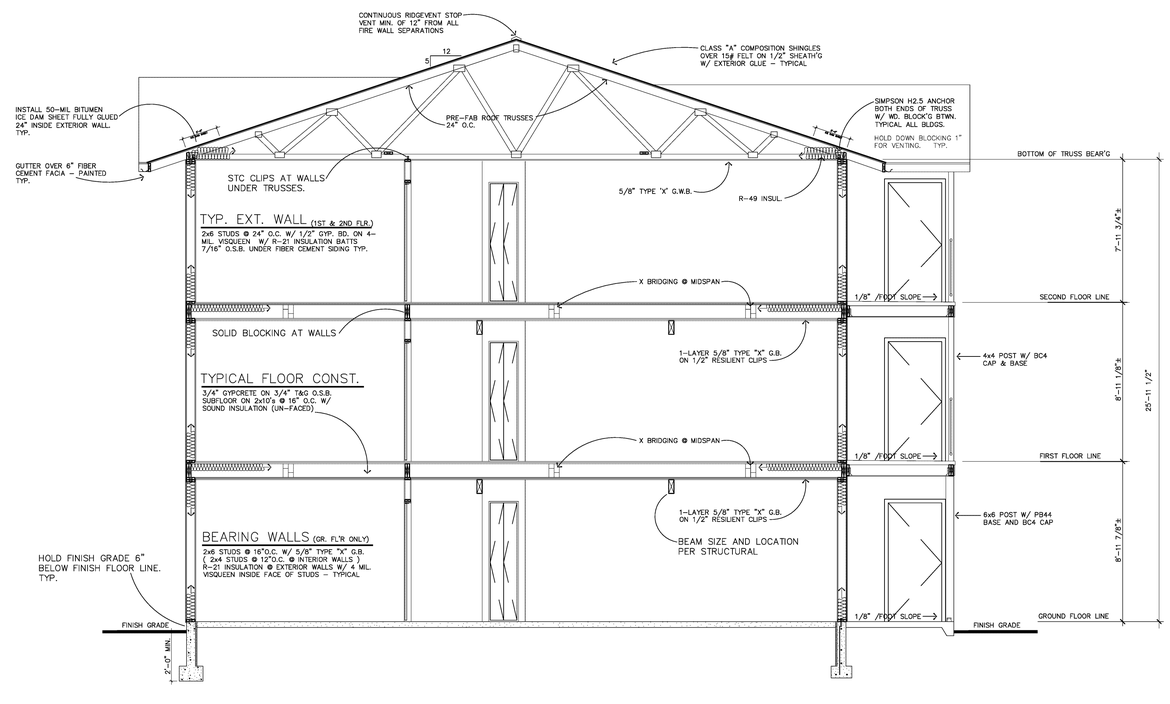

1 A5.0 TYPICAL BUILDING SECTION

0 2' 4' 8'

SCALE: 1/4"=1'-0"

REVISIONS

PROPOSED 18 UNIT BUILDING FOR:

LEGACY VILLAS

COUNRTY VISTA ROAD, LIBERTY LAKE, WA

WYATT ARCHITECTS AND ASSOCIATES

JAMES A. McARTHUR, A.I.A.

4206 South Crestline
Spokane, WA 99203
Phone 509-327-7364 / Fax 509-327-7999
jaleemcarthur@gmail.com

Project Manager:
Lee S. Schwarzenburg
PO Box 141713
Spokane Valley, WA 99214
Phone 509-928-9080
lee@wyattarchitects.com

SHEET TITLE: BUILDING SECTION

DRAWN BY: LJS

PROJECT: 15:26

DATE: 6/20/2016

SHEET NO. A5.0

KEY NOTES :

1. CONCRETE FOOTING AND FOUNDATION WALL.
2. REFER TO STRUCTURAL
3. REFER TO STRUCTURAL
4. REFER TO STRUCTURAL
5. FINISH GRADE, 6" BELOW SIDING, SLOPE AWAY FROM BUILDING.
6. REFER TO STRUCT. FOR COMPACTION
7. N/A
8. R-10 RIGID PERIMETER INSULATION 24" BELOW FLOOR.
9. 4" CONCRETE SLAB ON COMPACTED SUBGRADE.
10. 4" CONCRETE SLAB ON COMPACTED SUBGRADE. SLOPE SLAB 1/8" PER FOOT AWAY FROM BUILDING.
11. NOT USED.
12. 2x6 PRESSURE TREATED SILL (W/SILL SEAL).
13. N/A
14. 3/4" GYPCRETE FLOOR TOPPING ON 3/4" T & G O.S.B. ON 2x10 JOISTS @ 16" O.C.
15. 5/8" DIA. x 10" A.B.'s @ 48" O.C.
16. ASPHALT SHINGLES OVER 15# FELT ON 9/16" OSB SHEATHING. USE 50-MIL MEMBRANE, FULLY GLUED DOWN TO 24" INSIDE EXT. WALLS. TYP.
17. INSULATED 6268 VINYL SLIDING GLASS PATIO DOOR -TEMPERED
18. DECK JOISTS PER STRUCTURAL
19. R-21 BATT INSULATION W/ VAPOR BARRIER
20. 5/8" TYPE "X" GYPSUM BOARD ON BOTTOM CHORD OF ROOF TRUSS. W/RESILIENT CHANNELS @ 12" O.C.
21. 5/8" TYPE "C" GYPSUM BOARD ON RESILIENT FURRING CHANNELS ON JOIST W/ ACOUSTICAL SEALANT @ CEILING/WALL INTERSECTION.
22. ANCHOR BOLTS - REFER TO STRUCTURAL.
23. 5/8" TYPE "X" GYPSUM BOARD ON SIDE OF STRUCTURAL GABLE TRUSS WITH VERTICALS @ 16" O.C. PROVIDED BY TRUSS SUPPLIER
24. CONTINUOUS 2x4 NAILER.
25. 28 GAGE FLASHING WITH DRIP EDGE
26. N/A
27. R-11 SOUND BATT INSULATION
28. BLOWN INSULATION (R-49).
29. 2x4 STUDS (2 ROWS) @ 16" O.C. (STAGGER STUDS) W/ 1" AIR SPACE BETWEEN ROWS. (@ PARTY WALL).
30. N/A
31. N/A
32. 1/2" GYPSUM BOARD, TYP.
33. N/A
34. N/A
35. 5/8" TYPE "X" GYPSUM BOARD EACH SIDE.
36. RAIN GUTTERS TYPICAL AT FRONT AND BACK OF ALL BUILDINGS OVER PAINTED 2x6. TYP.
37. MANUFACTURED TRUSSES @ 24" O.C. W/ "SIMPSON" H1 TRUSS ANCHOR AT EACH END. CONTRACTOR TO PROVIDE AND INSTALL TRUSS BLOCKING AND BRACING PER TRUSS MANUFACTURERS DESIGN. REFER TO STRUCTURAL
38. SOLID BLOCKING BETWEEN ALL RAFTERS WITH "FRIEZE" VENTS BETWEEN EVERY OTHER RAFTER TAIL, (3) 1-1/2" HOLES PER VENT
39. INSULATION BAFFLE AT "FRIEZE" VENTS, ALLOW 2" CLEAR ABOVE INSULATION FOR VENTILATION. TYP.
40. 7/16"x6 FIBER CEMENT PRE-PRIMED
41. 1/2" PRE-PRIMED VENTED SOFFIT MATERIAL.
42. N/A
43. N/A
44. N/A
45. CONTINUOUS BLOCKING
46. N/A
47. N/A
48. GABLE TRUSS WITH VERTICALS @ 16" O.C.
49. OPEN SOFFIT PAINTED
50. N/A
51. 3" CONCRETE W/6X6-10/10 WIRE MESH ON 10 MIL MEMBRANE ON 3/4" P.T. T&G SHEATHING ON P.T. 2X8 JOISTS @ 16 O.C. - SLOPE CONCRETE 3" TO 2.5" FOR DRAINAGE. TYP.
52. HU28 JOIST HANGERS - REFER TO STRUCTURAL.
53. N/A
54. N/A.
55. N/A
56. SOLID FULLY ADHERED ICE-SHIELD LAYER TO 24" INSIDE INTERIOR WALL FACE OF EXTERIOR WALLS, TYPICAL ALL BUILDINGS.

NOTE:
THE STRUCTURAL DOCUMENTS TAKE PRECEDENCE OVER THE ARCHITECTURAL IN REGUARDS TO ANY STRUCTURAL ITEMS.

STRUCTURAL SHEAR WALL SCHEDULE SHALL OVERRIDE THE ARCHITECTURAL DETAILS AS PER DRYWALL AND SHEATHING LOCATIONS.

ul design no. p533 1 HOUR FIRE

WOOD ROOF TRUSSES, RESILIENT CHANNELS, GLASS FIBER INSULATION,GYPSUM WALLBOARD

ONE LAYER 5/8" TYPE X GYPSUM BOARD APPLIED AT RIGHT ANGLES TO RESILIENT FURRING CHANNELS 12" O.C. WITH 1 1/2" TYPE S DRYWALL SCREWS 8" O.C. GYPSUM BOARD END JOINTS ATTACHED WITH SCREWS 8" O.C. TO ADDITIONAL PIECES OF CHANNEL 60" LONG LOCATED 3" BACK ON EITHER SIDE OF END JOINT. RESILIENT CHANNELS APPLIED AT RIGHT ANGLES TO BOTTOM OF CHORD OF PITCHED WOOD TRUSSES 24" O.C. WITH 1 1/2" TYPE S OR W SCREWS. GLASS FIBER OR MINERAL FIBER BATT OR LOOSE FILL INSULATION APPLIED DIRECTLY OVER GYPSUM BOARD. TRUSSES SUPPORTED 1/2" PLYWOOD OR OSB ROOF SHEATHING APPLIED AT RIGHT ANGLES TO TRUSSES AND 6d RING SHANK NAILS 12" O.C.

CELING AT ROOF TRUSS

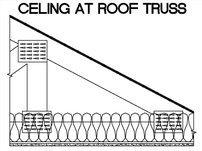

GA FILE NO. WP 8105 1 HOUR FIRE

GYPSUM WALLBOARD, GYPSUM SHEATHING, WOOD STUDS

EXTERIOR SIDE: ONE LAYER 48" WIDE 5/8" TYPE X GYPSUM SHEATHING APPLIED PARALLEL TO 2X4 WOOD STUDS 16" O.C. WITH 1 3/4" GALVANIZED ROOFING NAILS 4" O.C. AT VERTICAL JOINTS & 7" O.C. AT INTERMEDIATE STUDS AND TOP AND BOTTOM PLATES. JOINTS GYPSUM SHEATHING MAY BE LEFT UNTREATED. eXTERIOR CLADDING TO BE ATTACHED THROUGH SHEATHING TO STUDS.

INTERIOR SIDE: ONE LAYER 5/8" TYPE X GYPSUM WALLBOARD, APPLIED PARALLEL OR AT RIGHT ANGLES TO STUDS WITH 6D COATED NAILS, 1 7/8" LONG, 0.0915" SHANK, 1/4" HEADS, 7" O.C. (LOAD- BEARING)

EXTERIOR WALL
• STAIRWELL

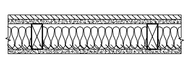

GA FILE NO. FC 5109 1 HOUR FIRE 55 TO 59 STC

SOUND

WOOD JOISTS, WOOD STRUCTURAL PANELS, GYPSUM FLOOR TOPPING, RESILENT CHANNELS, GLASS OR MINERAL FIBER BATT OR LOOSE FILL INSULATION, GYPSUM WALLBOARD

ONE LAYER 5/8" PROPRIETARY TYPE X GYPSUM WALLBOARD OR GYPSUM VENEER BASE APPLIED AT RIGHT ANGLES TO RESILENT FURRING CHANNELS 24" O.C. (16" O.C. WHEN BATT INSULATION IS USED; 12" O.C. WHEN LOOSE FILL INSULATION IS USED) WITH 1" TYPE S DRYWALL SCREWS 12" O.C. GYSUM BOARD END JOINTS LOCATED MIDWAY BETWEEN CONTINUOS CHANNELS AND ATTACHED WITH SCREWS 8" TO ADDITIONAL PIECES OF CHANNEL 60" LONG LOCATED 3" BACK ON EITHER SIDE OF END JOINT. RESILENT CHANNELS APPLIED AT RIGHT ANGLES TO NOMINAL 2X10 WOOD JOISTS SPACED A MAXIMUM OF 24" O.C. WITH 1-1/4" TYPE S DRYWALL SCREWS. GLASS OR MINERAL FIBER BATT INSULATION STAPLED TO SUBFLOOR OR LOOSE FILL INSULATION APPLIED DIRECTLY OVER GYPSUM BOARD. WOOD JOISTS SUPPORTING 15/32" WOOD STRUCTURAL PANEL SUBFLOOR APPLIED AT RIGHT ANGLES TO JOISTS WITH CONSTRUCTION ADHESIVE AND 6D RING SHANK NAILS 12" O.C. MIN. 1/2" PROPRIETARY GYPSUM FLOOR TOPPING APPLIED OVER SUBFLOOR.

STC AND IIC RATED WITH BOTH JOISTS AND RESILENT CHANNELS SPACED 16" O.C., 3-1/2" GLASS FIBER INSULATION IN JOIST SPACES, 3/4" PROPRIETARY GYPSUM FLOOR TOPPING POURED OVER 1/4" PROPRIETARY SOUND REDUCTION MAT, AND WITH FINISH FLOORING OF C&P, SHEET VINYL, AND ENGINEERED WOOD LAMINATE.

PROPRIETARY GYPSUM CONPONENTS

UNITED STATES GYPSUM COMPANY -5/8" SHEETROCK BRAND FIRECODE C CORE GYPSUM PANEL
(SELFSTICK BRAND FLOOR UNDERLAYMENT

FLOOR ASSEMBLY

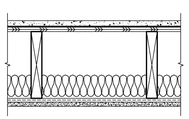

GA FILE NO. WP 3370 1 HOUR FIRE SOUND 45 TO 49 STC (57 stc)

GYPSUM WALLBOARD, DOUBLE WOOD STUDS

ONE LAYER 5/8" PROPRIETARY TYPE X GYPSUM VENEER OR GYPSUM VENEER BASE APPLIED PARALLEL OR AT RIGHT ANGLES TO EACH SIDE OF DOUBLE ROW OF 2X4 WOOD STUDS 16" O.C. ON SEPERATE PLATES 1" APART WITH 6D COATED NAILS, 1 7/8" LONG, 0.0915" SHANK, 1/4" HEADS, 7" O.C. JOINTS STAGGERED 16" ON OPPOSITE SIDES. HORIZONTAL BRACING REQUIRED AT MID-HEIGHT. (LOAD- BEARING)

TEST #: NBC-W13b, stc: 57
double wood studs spaced 400 mm (16") or 600 mm (24") o.c., seperate plates set at 25mm (1") apart; single layer 12.7mm (1/2") type x gypsum board each side; two thickness, 89mm (3 1/2") thick fiberglas pink batt insulation.

WALL BETWEEN DWELLING UNIT

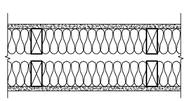

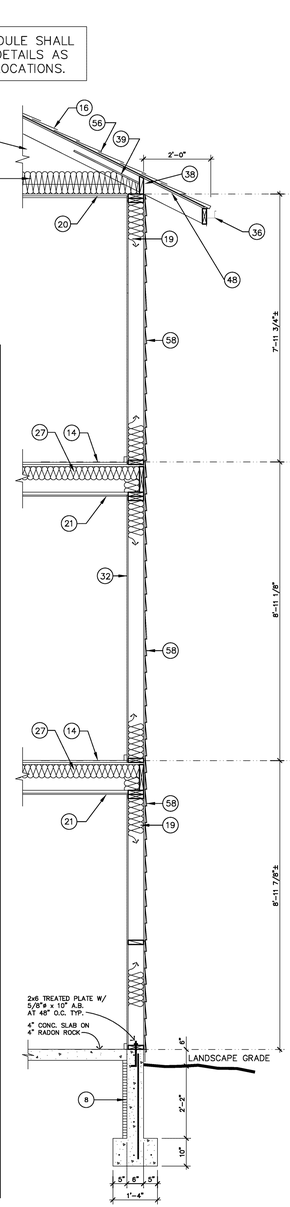

1 WALL SECTION
1/2" = 1'-0"

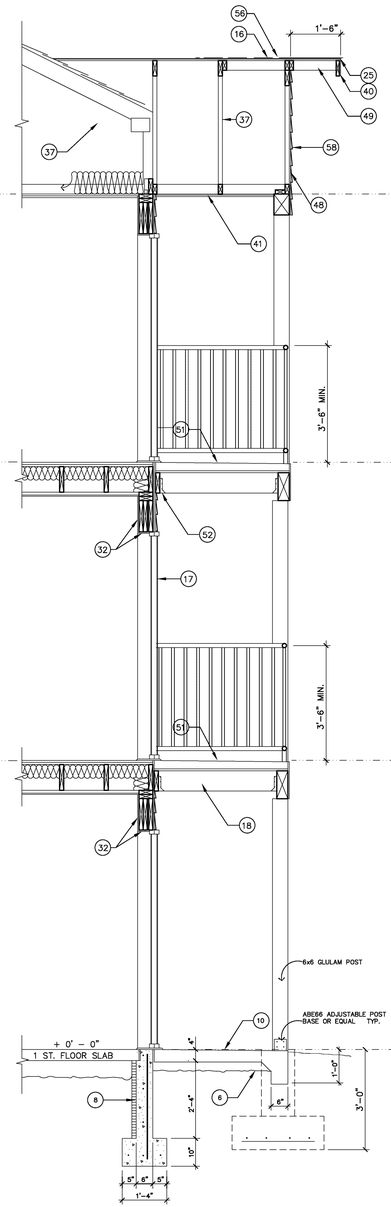

2 WALL SECTION
1/2" = 1'-0"

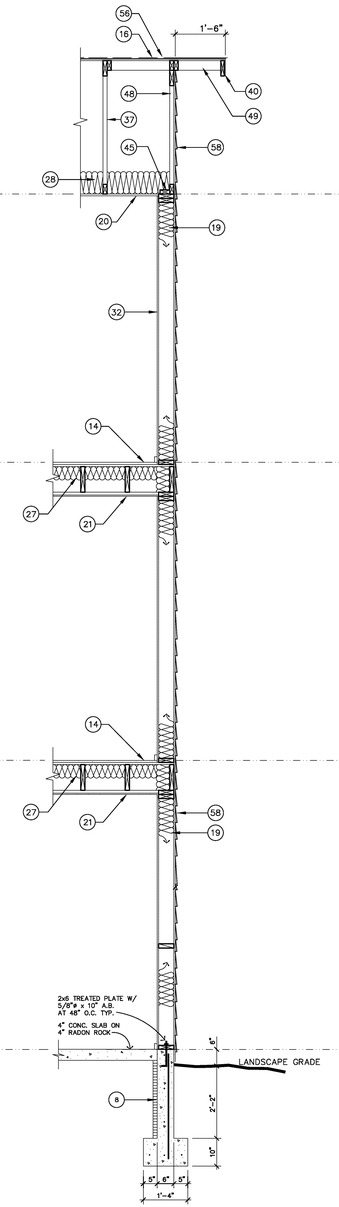

3 WALL SECTION
1/2" = 1'-0"

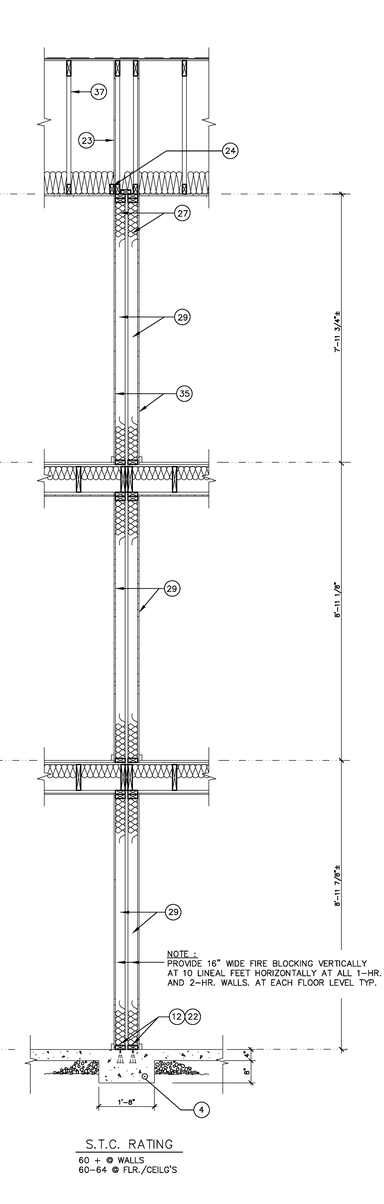

S.T.C. RATING
60 + @ WALLS
60-64 @ FLR./CEILG'S

4 WALL SECTION 1-HR
1/2" = 1'-0"

REVISIONS

PROPOSED 18 UNIT BUILDING FOR:

LEGACY VILLAS

COUNRTY VISTA ROAD, LIBERTY LAKE, WA

WYATT ARCHITECTS AND ASSOCIATES
JAMES A. McARTHUR, A.I.A.
Project Manager:
Lee J. Schwatrzenburg
Sprague Building
Spokane Valley,
Spokane County, WA 99214
Phone 509-928-8900
leeschwartz@wyattarchitects.com

SHEET TITLE:
WALL SECTIONS

DRAWN BY:
LJS

PROJECT:
15:26

DATE:
6/20/2016

SHEET NO.
A5.1

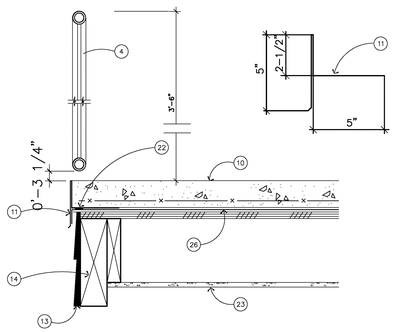

2 LANDING and DECK EDGE DETAIL
SCALE : 1-1/2" = 1'-0"

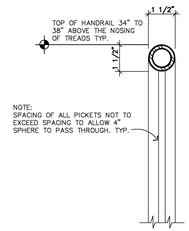

9 OPTIONAL GUARDRAIL @ STAIR
SCALE : 3" = 1'-0"

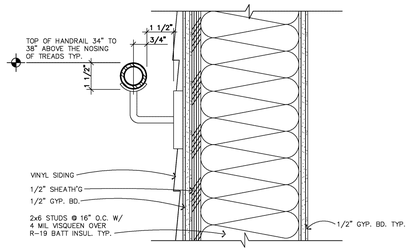

8 OPTIONAL METAL HANDRAIL @ VINYL SIDING
SCALE : 3" = 1'-0"

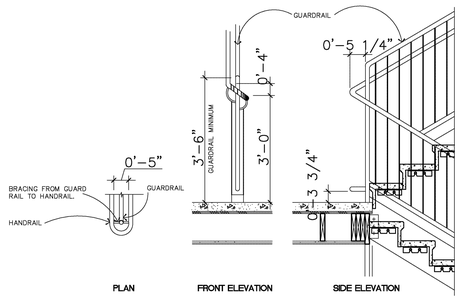

RAIL ELEVATION 7
SCALE: 1/2" = 1'-0"

NOTE:
STRUCTURAL DETAILS SHALL PREVAIL FOR STAIR AND LANDING DETAILS.

NOTE:
3" SPACING BETWEEN BOTTOM RAIL AND STRINGER ALLOWS FOR A 4" SPHERE TO NOT PASS THROUGH THIS SPACE. TYP.

THERE SHALL BE NO RISER HEIGHT MORE THEN 7 INCHES AND NO TREAD DEPTH LESS THEN 11 INCHES PER IBC SECTION 1009.4.2. TYP.

FIELD VERIFY FLOOR TO FLOOR, TREAD AND RISER HEIGHTS. TYP.

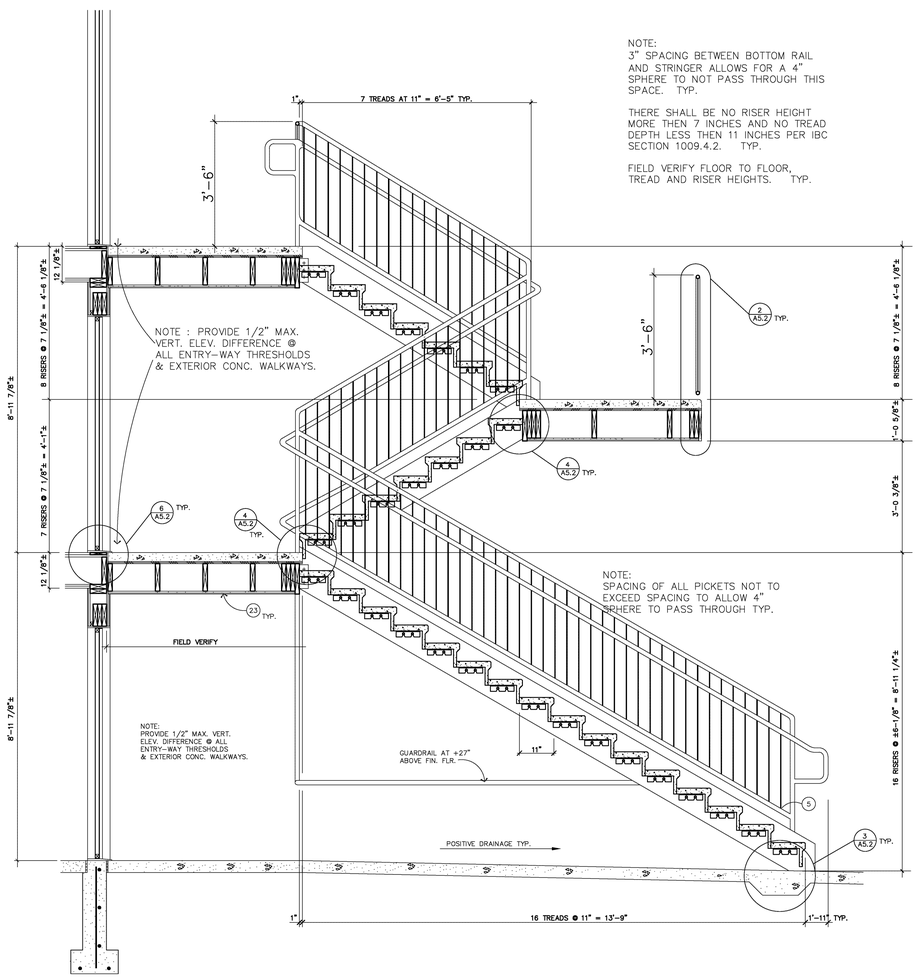

1 STAIR SECTION
SCALE: 1/2" = 1'-0"

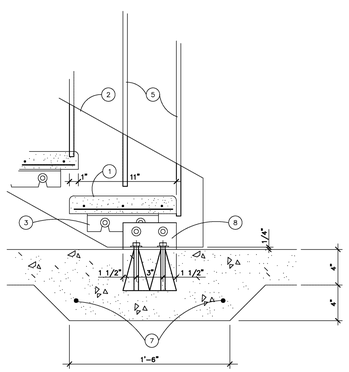

STAIR DETAIL 3
SCALE : 1 1/2" = 1'-0"

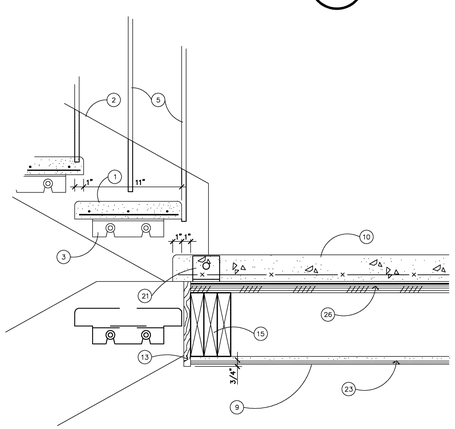

STAIR / LANDING DETAIL 4
SCALE : 1 1/2" = 1'-0"

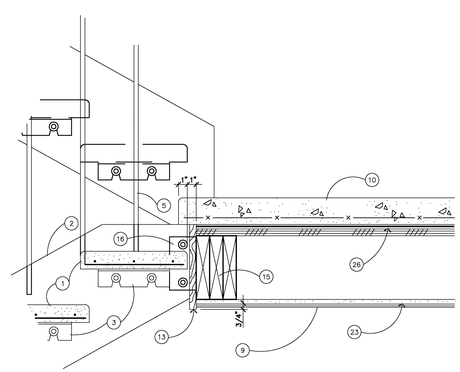

STAIR / LANDING DETAIL 5
SCALE : 1 1/2" = 1'-0"

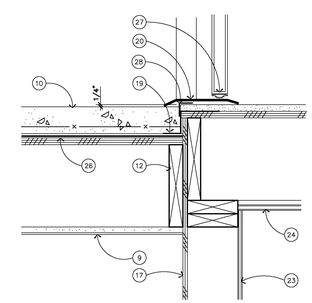

LANDING DETAIL 6
SCALE : 1 1/2" = 1'-0"

KEY NOTES:

1. 3" PRECAST STAIR TREAD (DESIGN TO SUPPORT 100 P.S.F. LIVE LOAD) W/ CAST-IN 2x4x1/4" CLIPS FOR WELDING. CHAMFER NOSING, BROOM FINISH.
2. 3-1/8 x12 GLU-LAM STRINGER FINISH W/ 3 COATS VARNISH
3. 2x2x1/4x0'-8" ANGLE TREAD CLIP, BOLT TO STRINGER W/ (2) 3/8" DIA. BOLTS.
4. 2x6 V.G. FIR RAIL W/ RADIUSED EDGES & FINGER GRIPS W/3 COATS OF VARNISH - SAND BETWEEN EACH COAT
5. 1/2" SQ. & 1" SQ. ALTERNATING STEEL TUBES AT 4" O.C. W/ (2) 1/4" DIA. LAG BOLTS TOP & BOTTOM, W/ TOP CAPPED. BOLT HEADS TO BE ON LANDING/STAIR SIDE.
6. 2x6 V.G. FIR HANDRAIL, RADIUS EDGES, EXTEND AS SHOWN ON PLAN BEYOND TOP & BOTTOM RISERS & RETURN HANDRAIL TO WALLS. MOUNT HANDRAIL TO WALL W/ (2) 1/4" DIA. COUNTER SUNK LAG BOLTS.
7. L3X5X1/4" & L3X3X1/4" BOLT TO RAIL AND TO WALL
8. 3x3x3/8x0'-6" ANGLE W/ (2) 5/8" DIA. BOLTS TO STRINGERS & (2) 5/8"x5" EXPANSION BOLTS AT SLAB.
9. VENTED FIBER CEMENT SOFFIT
10. 3" CONCRETE TOPPING W/ 6x6-10/10 WIRE MESH ON 10 MIL MEMBRANE ON 3/4" PRESSURE TREATED T & G SHTG. ON PRESSURE TREATED 2x8 JOISTS @ 16" O.C. W/ SIMPSON U210 HANGERS. SLOPE CONCRETE 3" TO 2 1/2" FOR DRAINAGE.
11. 24 GA. METAL FLASHING - PAINT.
12. REFER TO STRUCTURAL
13. 1x FIBER CEMENT FASCIA.
14. (2) PRESSURE TREATED 2x10 HEADERS -REFER TO STRUCTURAL
15. (3) PRESSURE TREATED 2x10 HEADERS
16. 3-3/4"6x0'-6" ANGLE W/ (2) 3/4" DIA. BOLTS EA. LEG TO STRINGER & HEADER.
17. SIDING
18. 1x2 FIBER CEMENT TRIM.
19. 24 GA. G.I. "Z" FLASHING.
20. THRESHOLD SET IN SEALANT.
21. 3x3x3/16x0'-3" ANGLE W/ 5/8" DIA. BOLTS EA. LEG TO STRINGER & HEADER.
22. N/A
23. 5/8" TYPE 'X' SOFFIT BD. (TYP. @ BREZZEWAY) TAPE,SKIP TROWEL & PAINT
24. N/A
25. 2x4 S4S REDWOOD (FLAT)
26. WATERPROOF MEMBRANE
27. ADJUSTABLE DOOR BOTTOM W/DOOR SWEEP
28. 1 1/2"x 1 1/2" CORNER FLASH'G CONTINUOUS

REVISIONS

PROPOSED 18 UNIT BUILDING FOR:

LEGACY VILLAS

COUNTRY VISTA ROAD, LIBERTY LAKE, WA

WYATT ARCHITECTS AND ASSOCIATES
JAMES A. McARTHUR, A.I.A.
4205 South Greene
Spokane, WA 99223
Phone 509-327-7343 / Fax 509-327-7999
jaMarmcarthur@gmail.com

Project Manager:
Lee J. Schwatrzenburg
EcoPro Homes, LLC
Spokane Valley, WA 99214
Phone 509-928-8600
lee@ecoprohomes.com

SHEET TITLE:
STAIR DETAILS

DRAWN BY:
LJS

PROJECT:
15:26

DATE:
6/20/2016

SHEET NO.
A5.2

IBC 714.3.2 Membrane penetrations.
Membrane penetrations shall comply with Section 714.3.1. Where walls or partitions are required to have a fire-resistance rating, recessed fixtures shall be installed such that the required fire-resistance will not be reduced.

Exceptions:
1. Membrane penetrations of maximum 2-hour fire-resistance-rated walls and partitions by steel electrical boxes that do not exceed 16 square inches (0.0 103 m2) in area, provided the aggregate area of the openings through the membrane does not exceed 100 square inches (0.0645 m2) in any 100 square feet (9.29 m2) of wall area. The annular space between the wall membrane and the box shall not exceed 1/8 inch (3.1 mm). Such boxes on opposite sides of the wall or partition shall be separated by one of the following:
1.1. By a horizontal distance of not less than 24 inches (610 mm) where the wall or partition is constructed with individual noncommunicating stud cavities;
1.2. By a horizontal distance of not less than the depth of the wall cavity where the wall cavity is filled with cellulose loose-fill, rockwool or slag mineral wool insulation;
1.3. By solid fireblocking in accordance with Section 718.2.1;
1.4. By protecting both outlet boxes with listed putty pads; or
1.5. By other listed materials and methods.
2. Membrane penetrations by listed electrical boxes of any material, provided such boxes have been tested for use in fire-resistance-rated assemblies and are installed in accordance with the instructions included in the listing. The annular space between the wall membrane and the box shall not exceed 1/8 inch (3.1 mm) unless listed otherwise. Such boxes on opposite sides of the wall or partition shall be separated by one of the following:
2.1. By the horizontal distance specified in the listing of the electrical boxes;
2.2. By solid fireblocking in accordance with Section 718.2.1;
2.3. By protecting both boxes with listed putty pads; or
2.4. By other listed materials and methods.

System No. F-C-2134
May 20, 2005
F Rating - 1 Hr
T Rating - 3/4 Hr

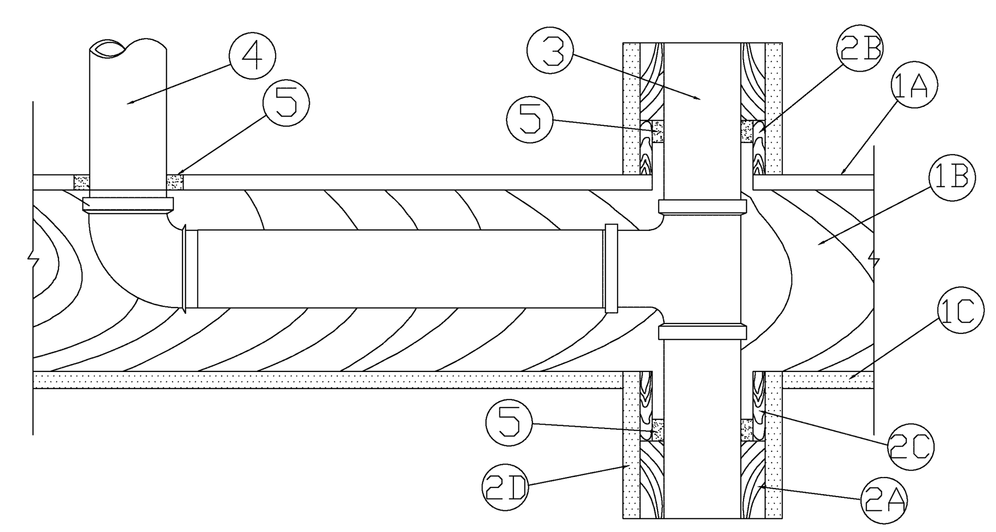

1. Floor Assembly - The 1 hr fire rated wood truss or combination wood and steel truss Floor-Ceiling assembly shall be constructed of the materials and in the manner described in the individual L500 Series Design in the UL Fire Resistance Directory, as summarized below:

A. Flooring System - Lumber or plywood subfloor with finish floor of lumber, plywood or Floor Topping Mixture* as specified in the individual Floor-Ceiling Design. Diam of opening shall be equal to or max 1 in. larger than the outside diam of nonmetallic pipe (Items 3 and 4).
B. Joists - Nom 10 in. deep (or deeper) lumber, steel or combination lumber and steel joists, trusses or **Structural Wood Members*** with bridging as required and ends firestopped.
C. Gypsum Board* - Nom 4 ft wide by 5/8 in. (16 mm) thick, attached as described in the individual Floor-Ceiling Design.

2. Chase Wall - The through penetrant (Item No. 3) shall be routed through a 1 hr fire-rated single, double or staggered wood studs/gypsum wallboard chase wall constructed of the materials and in the manner specified in the individual U300 Series Wall and Partition Designs in the UL Fire Resistance Directory and shall include the following construction features:

A. Studs - Nom 2 by 6 in. (51 by 152 mm) or double nom 2 by 4 in. (51 by 102 mm) lumber studs.
B. Sole Plate - Nom 2 (51 mm) by 6 in. (51 by 152 mm) or parallel 2 by 4 in. (51 by 102 mm) lumber plates, tightly butted.
C. Top Plate - The double top plate shall consist of two nom 2 by 6 in. (51 by 152 mm) or two sets of parallel 2 by 4 in. (51 by 102 mm) lumber plates, tightly butted. Diam of opening shall be equal to or max 1 in. (25 mm) larger than the outside diam of nonmetallic pipe or conduit (Item 3).
D. Gypsum Board* - Thickness, type, number of layers and fasteners shall be as specified in individual Wall and Partition Design.

3. Through Penetrant - One nonmetallic pipe to be installed within the firestop system. Pipe to be rigidly supported on both sides of floor-ceiling assembly. The annular space between pipe and periphery of opening shall be min 0 in. (point contact) to max 1/2 in. (0 to max 13 mm).Pipe may be installed with continuous point contact. The following types and sizes of nonmetallic pipes may be used:

A. Polyvinyl Chloride (PVC) Pipe - Nom 4 in. (102 mm) diam (or smaller) Schedule 40 solid core PVC pipe for use in closed (process or supply) or vented (drain, waste or vent) piping system.
B. Cellular Core Polyvinyl Chloride (ccPVC) Pipe - Nom 4 in. (102 mm) diam (or smaller) Schedule 40 cellular core PVC pipe for use in closed (process or supply) or vented (drain, waste or vent) piping system.
C. Acrylonitrile Butadiene Styrene (ABS) Pipe - Nom 4 in. (102 mm) diam (or smaller) Schedule 40 solid core ABS pipe for use in closed (process or supply) or vented (drain, waste or vent) piping system.
D. Cellular Core Acrylonitrile Butadiene Styrene (ccABS) Pipe - Nom 4 in. (102 mm) diam (or smaller) Schedule 40 cellular core ABS pipe for use in closed (process or supply) or vented (drain, waste or vent) piping system.

4. Branch Piping - (Optional) One nonmetallic pipe to be connected to through penetrant (Item 3) and installed within opening in subfloor or wallboard plate. The annular space between pipe and periphery of opening shall be min 0 in. (point contact) to max 1/2 in. (0 to max 13 mm) Pipe may be installed with continuous point contact . The following types and sizes of nonmetallic pipes may be used:

A. Polyvinyl Chloride (PVC) Pipe - Nom 3 in. diam (or smaller) Schedule 40 solid core PVC pipe for use in closed (process or supply) or vented (drain, waste or vent) piping system.
B. Cellular Core Polyvinyl Chloride (ccPVC) Pipe - Nom 3 in. diam (or smaller) Schedule 40 cellular core PVC pipe for use in closed (process or supply) or vented (drain, waste or vent) piping system.
C. Acrylonitrile Butadiene Styrene (ABS) Pipe - Nom 3 in. diam (or smaller) Schedule 40 solid core ABS pipe for use in closed (process or supply) or vented (drain, waste or vent) piping systems.
D. Cellular Core Acrylonitrile Butadiene Styrene (ccABS) Pipe - Nom 3 in. (76 mm) diam (or smaller) Schedule 40 cellular core ABS pipe for use in closed (process or supply) or vented (drain, waste or vent) piping system.

5. Fill,Void or Cavity Materials* - Caulk or Sealant - Min 3/4 in. (19 mm) thickness of caulk applied within annular space around perimeter of through penetrant (Item 3), flush with top surface of floor or sole plate and flush with bottom surface of top plate. Min 3/4 in. thickness of caulk applied within annular space around perimeter of branch piping (Item 4), flush with top surface of floor. Min 1/2 in. diam bead applied at the pipe/floor interface and the pipe/wallboard or plate interface.

3M COMPANY - CP 25WB+ caulk, IC 15WB+ caulk, FD-150+ sealant or FB-3000 WT sealant

*Bearing the UL Classification Mark

1. Floor Assembly - The 1 hr fire rated wood truss or combination wood and steel truss Floor-Ceiling assembly shall be constructed of the materials and in the manner described in the individual L500 Series Design in the UL Fire Resistance Directory, as summarized below:

A. Joists - Nom 10 in. (254 mm) deep (or deeper) lumber, steel or combination lumber and steel joists, trusses or **Structural Wood Members*** with bridging as required and ends firestopped.
B. Flooring System - Lumber or plywood subfloor with finish floor of lumber, plywood or **Floor Topping Mixture*** as specified in the individual Floor-Ceiling Design. Diameter of opening shall be 5/8 in. (16 mm) larger than the outside diam of nonmetallic pipe or conduit (Item 2).
C. Gypsum Board* - Nom a 4 ft (122 cm) wide by 5/8 in. (16 mm) thick, screw-attached to furring channels. Diameter of opening shall be 5/8 in. (16 mm) larger than the outside diam of nonmetallic pipe or conduit (Item 2).

1.1 Chase Wall (Optional, not shown) - The through penetrants (Item 2) may be routed through a 1 hr fire-rated single, double or staggered wood stud/gypsum wallboard chase wall constructed of the materials and in the manner specified in the individual U300 Series Wall and Partition Designs in the UL Fire Resistance Directory and shall include the following construction features:

A. Studs - Nom 2 in. by 6 in. (51 mm by 152 mm) or double nom 2 in. by 4 in. (51 mm by 102 mm) lumber studs.
B. Sole Plate - Nom 2 in. by 6 in. (51 mm by 152 mm) or parallel 2 in. by 4 in. (51 mm by 102 mm) lumber plates, tightly butted.
C. Top Plate - The double top plate shall consist of two nom 2 in. by 6 in. (51 mm by 152 mm) or two sets of parallel 2 in. by 4 in. (51 mm by 102 mm) lumber plates, tightly butted. Diameter of opening shall be 5/8 in. (16 mm) larger than outside diam of nonmetallic pipe or conduit.
D. Gypsum Board* - Thickness, type, number of layers and fasteners shall be as specified in individual Wall and Partition Design.

2. Through Penetrants - One nonmetallic pipe, tubing or conduit to be installed concentrically or eccentrically within the firestop system. Annular space between pipe, tubing or conduit and edge of opening to be min 0 in. (point contact) and max 5/8 in. (0 mm to max 16 mm). Pipe, tubing or conduit to be rigidly supported on both sides of floor-ceiling assembly. The following types and sizes of nonmetallic pipes, tubing or conduit may be used:

A. Polyvinyl Chloride (PVC) Pipe - Nom 1-1/2 in. (38 mm) diam (or smaller) Schedule 40 solid core PVC pipe for use in closed (process or supply) or vented (drain, waste or vent) piping system.
B. Rigid Nonmetallic Conduit++ - Nom 1-1/2 in. (38 mm) diam (or smaller) Schedule 40 solid core PVC conduit installed in accordance with Article 347 of the National Electrical Code (NFPA No. 70).
C. Chlorinated Polyvinyl Chloride (CPVC) Pipe - Nom 1-1/2 in. (38 mm) diam (or smaller) SDR13.5 CPVC pipe for use in closed (process or supply) piping systems.
D. Cellular Core Polyvinyl Chloride (ccPVC) Pipe - Nom 1-1/2 in. (38 mm) diam (or smaller) Schedule 40 cellular core PVC pipe for use in closed (process or supply) or vented (drain, waste or vent) piping system.
E. Acrylonitrile Butadiene Styrene (ABS) Pipe - Nom 1-1/2 in. (38 mm) diam (or smaller) Schedule 40 solid core ABS pipe for use in closed (process or supply) or vented (drain, waste or vent) piping system.
F. Cellular Core Acrylonitrile Butadiene Styrene (ccABS) Pipe - Nom 1-1/2 in. (38 mm) diam (or smaller) Schedule 40 cellular core ABS pipe for use in closed (process or supply) or vented (drain, waste or vent) piping system.
G. Crosslink Polythylene (PGX) Tube - Nom 1 in. (25 mm) diam (or smaller) SDR 9 PEX tube for use in closed (process or supply) piping system.
H. Electrical Nonmetallic (ENT) Tubing+ - Nom 1-1/4 in. (32 mm) diam (or smaller) corrugated wall electrical nonmetallic tubing constructed of polyvinyl chloride. ENT to be installed as a complete system with all terminations in junction boxes, outlet boxes or other approved enclosures as specified in the National Electrical Code.

The hourly T Rating is 1 Hr when pipes/conduits A, B, C , G or H are used.
The hourly T Rating is 0 Hr when pipes D, E or F are used.

3. Fill,Void or Cavity Materials* - Caulk, Sealant or Putty - Min 3/4 in. (19 mm) thickness of fill material applied within the annulus, flush with top surface of floor or sole plate. Min 5/8 in. (16 mm) thickness of fill material applied within the annulus, flush with bottom surface of ceiling or top plate. An additional min 1/4 in. (6 mm) crown of fill material applied to perimeter of penetrant at its egress from the top of flooring and underside of ceiling or from top of sole plate and underside of top plate.

3M COMPANY - CP 25WB+, IC 15WB+ caulk, FB-3000 WT sealant or MP+ Stix putty
(Note: CP 25WB+ not suitable for use with CPVC pipes.)

*Bearing the UL Classification Marking
++Bearing the UL Listing Mark

System No. F-C-2039
May 18, 2005
F Rating - 1 Hr
T Ratings - 0 & 1 Hr (See Item 2)

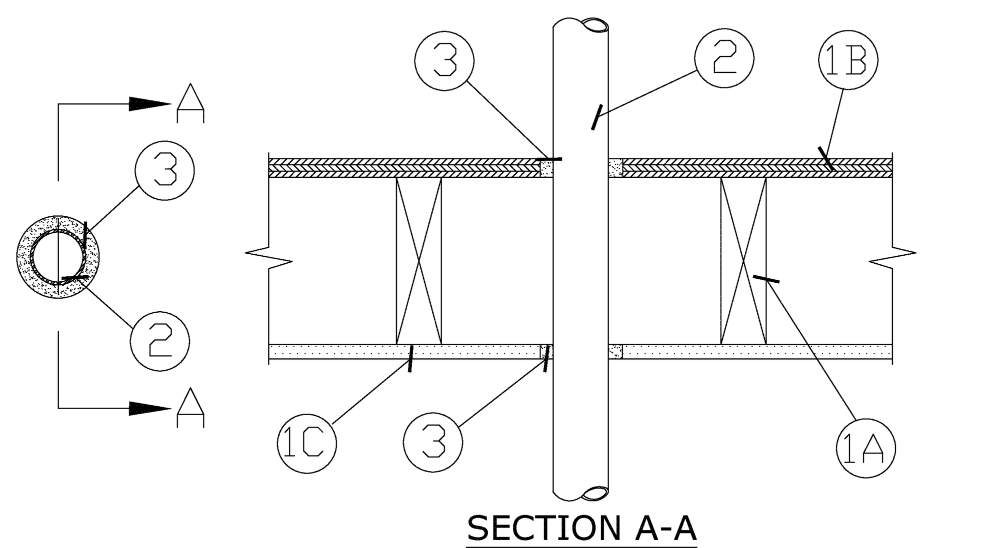

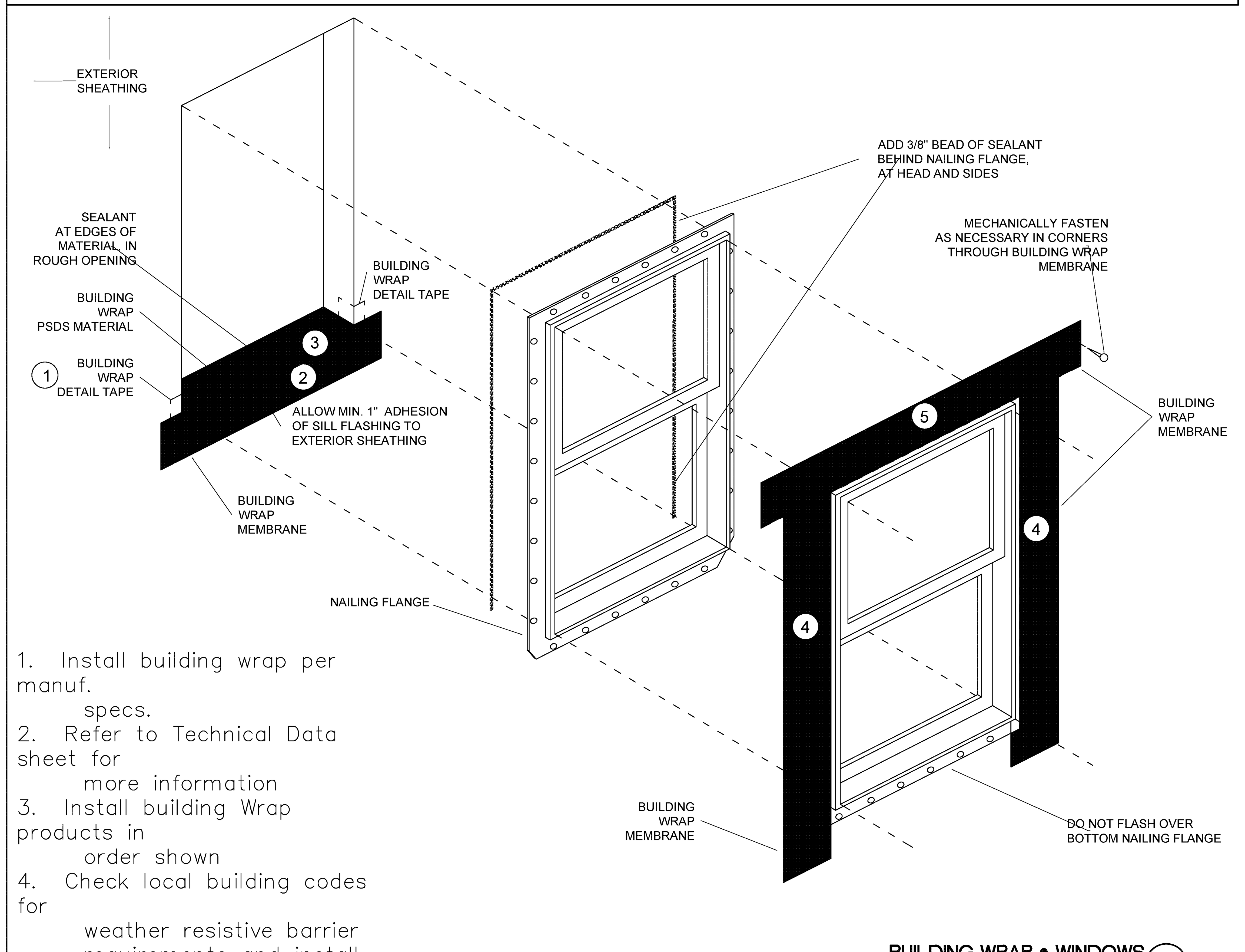

1. Install building wrap per manuf. specs.
2. Refer to Technical Data sheet for more information
3. Install building Wrap products in order shown
4. Check local building codes for weather resistive barrier requirements and install building Wrap to form water-shedding laps
5. If applicable, leave release

BUILDING WRAP @ WINDOWS (4)
EXTERIOR OPENINGS SIMILAR — SCALE: NONE

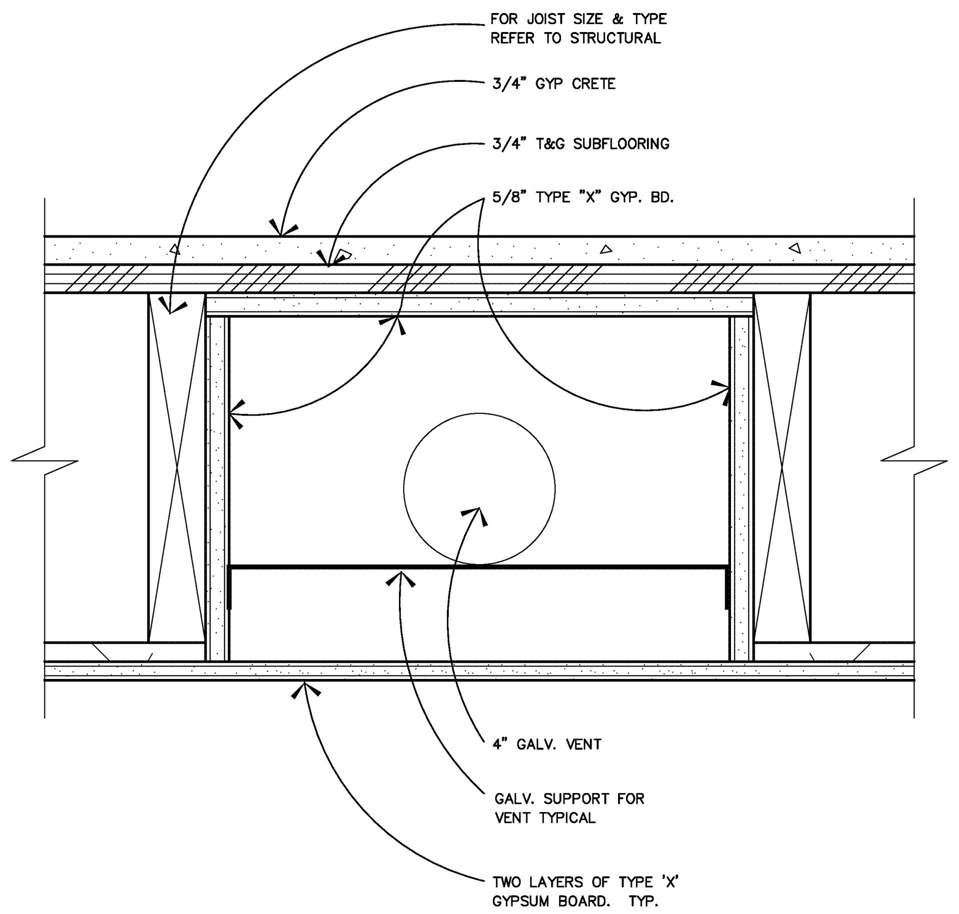

TO ELIMINATE GYPSUM BORAD BETWEEN JOISTS, BOX IN FAN ON ALL SIDES WITH GYPSUM BOARD. CUT A HOLE IN GYPSUM BOARD TO ALLOW FOR A 26 GAGE METAL DUCT TO EXTERIOR.

TYPICAL PENETRATION @ 1-HR FLOOR (3)
SCALE: 3" = 1'-0"

THE OPENING SHALL BE LAYERED WITH 5/8" GYPSUM BOARD TO MAINTAIN THE FIRE RATING.

FIELD VERIFY DEMISIONS OF WALL HEATER AND FIRE EXTINGUISER PRIOR TO FRAMING.

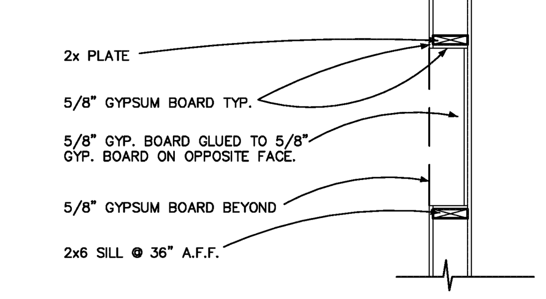

RATED OPENING @ F.E.C. AND WALL HEATER (2)
SCALE: 1/2" = 1'-0"

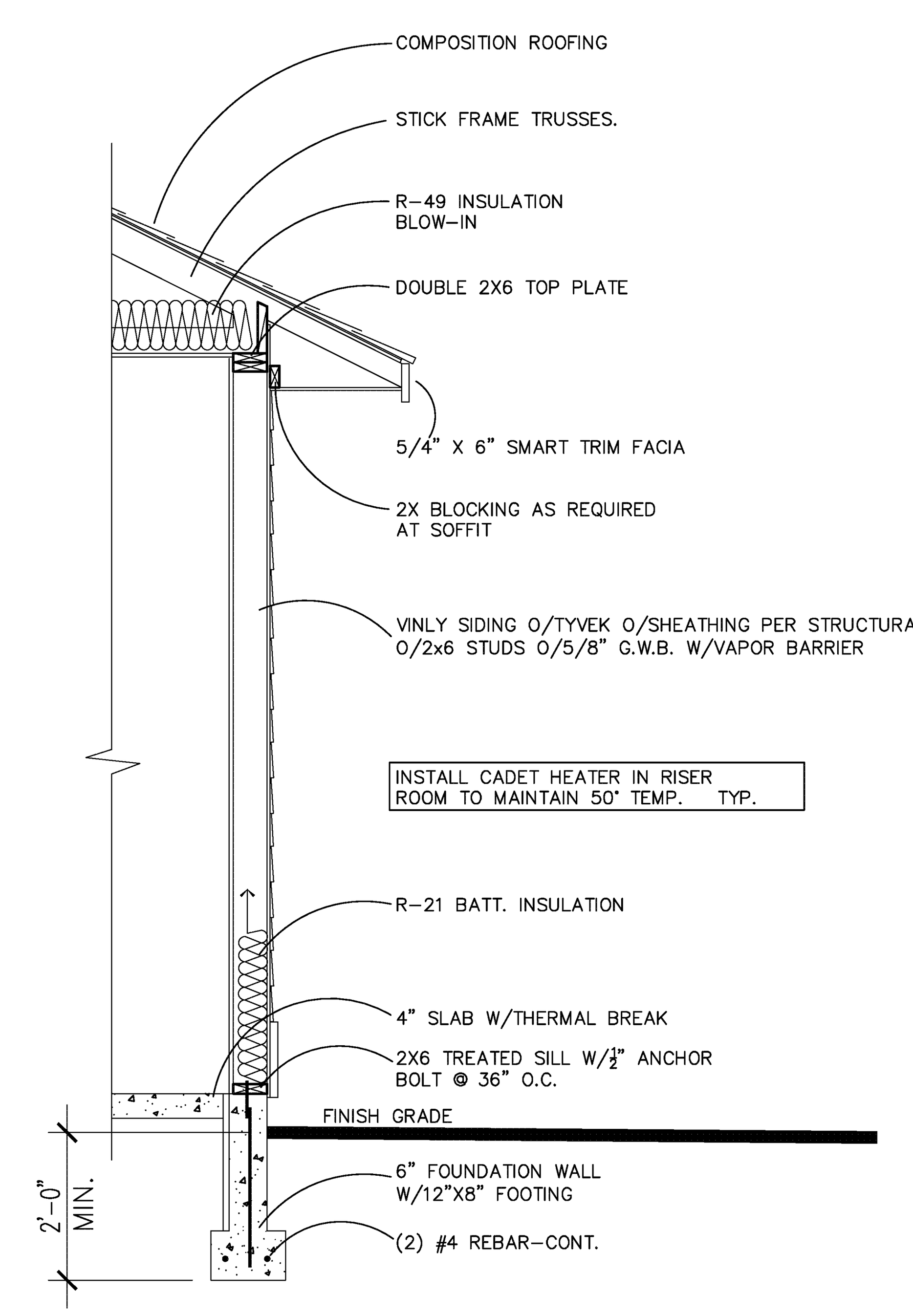

RISER ROOM SECTION (1)
SCALE: 1/2" = 1'-0"

REVISIONS

PROPOSED 18 UNIT BUILDING FOR:
LEGACY VILLAS
COUNRTY VISTA ROAD, LIBERTY LAKE, WA

WYATT ARCHITECTS AND ASSOCIATES
JAMES A. McARTHUR, A.I.A.
4205 South Crestline
Spokane, WA 99203
Phone: 509-327-7943 / Fax: 509-327-7999
jallanmcarthur@gmail.com
Project Manager:
Lee J. Schwatrzenburg
PO Box 141713
Spokane Valley, WA 99214
Phone: 509-928-1860
lee@wyattarchitects.com

SHEET TITLE:	DETAILS
DRAWN BY:	LJS
PROJECT:	15:26
DATE:	6/20/2016
SHEET NO.	A5.3

GENERAL REQUIREMENTS

Structural drawings shall be used in conjunction with Architectural, Mechanical, Plumbing, and Electrical drawings for bidding and construction purposes. Contractor shall verify all dimensions and conditions for compatibility before proceeding. Any discrepancies shall be brought to the attention of the Architect and the Engineer of Record.

The structural notes are intended to compliment the project specifications. Specific notes and details in the drawings shall govern over the general structural notes and typical details.

All work shall be done in accordance with OSHA requirements. Potential conflicts between these documents and OSHA requirements shall be brought to the attention of the structural engineer prior to proceeding with the work.

Contractor to refer to Architectural, Civil, Mechanical, Plumbing and Electrical drawings for locations and sizes of pipes, vents, ducts and other openings not shown on this plan. Sizes and locations of mechanical and other equipment that differs from those shown on the contract drawings shall be reported to the architect/engineer.

Contractor to refer to Architectural and Civil Engineering drawing to coordinate finished grade elevations, finished floor elevations and any slab depressions, slopes or other finishing requirements.

Contractor shall be responsible for erection stability and temporary shoring as required until the completion of the structure. The Structural Engineer is responsible for the strength and stability of the primary structure in its completed form.

Contractor initiated changes shall be in writing to the Architect/Engineer of Record for approval prior to fabrication and/or construction.

Drawings indicate general and typical details of construction and may not reflect all details of the work. Where conditions are not specifically indicated but are of a similar character to details shown, similar details of construction shall be used, subject to the review and approval of the architect and structural engineer.

BASIS OF DESIGN

GOVERNING CODE:	International Building Code, 2012 Edition
WIND DESIGN:	Basic Wind Speed 110 MPH, Exposure C, Building Category II (Iw = 1.0)
SEISMIC DESIGN:	Seismic Importance Factor, Ie = 1.0 Seismic Use Group = II Site Class = C Spectral Response Coefficient (Short Period) SDS = 0.274 g Spectral Response Coefficient (1-Second Period) SD1 = 0.129g Seismic Design Category B Response Modification Factor: R = 6.5 (Light framed wood shear walls) Seismic response coefficients(s), Cs = 0.0422 (Allowable Stress Design)

DESIGN LIVE LOADS:

Roof (Snow)	40 PSF
Roof (Construction Live)	20 PSF (Not concurrent with Snow)
Floor (Residential)	40 PSF
Floor (Corridor/Stairway)	100 PSF

DESIGN DEAD LOADS:

Roof	15 PSF
Floor (Residential)	25 PSF (Includes 1" Gpycrete topping)
Floor (Corridor/Stairway)	50 PSF (Includes 3" Concrete topping)

FOUNDATIONS:

DESIGN SOIL VALUES:	3000 PSF
FROST PROTECTION:	24 Inch Minimum

GEOTECHNICAL REPORT:
Recommendations contained in "Geotechnical Evaluation, Proposed Apartments Parcel NO. 55156.9189 Liberty Lake, WA" by Inland Pacific Engineering Company, Project #15-189 Dated October 29, 2015 was used for this design. Contractor shall review the Geotechnical Report and shall follow the recommendations specified therein regarding subgrade preparation and water mitigation.

GEOTECHNICAL INSPECTION:
The Geotechnical Engineer shall inspect all prepared soil bearing surfaces prior to placement of concrete and reinforcing steel and provide a letter to the owner stating the soils are adequate to support the design soil values. Contractor to follow the geotechnical engineer's recommendations for Steep Slope Best Management Practices where applicable.

CAST-IN-PLACE CONCRETE

All concrete shall be stone aggregate concrete having a unit weight of approximately 150 pcf. Concrete submittals shall conform to IBC Section 1905. Contractor shall submit concrete mix design and testing reports for review by the engineer prior to placement of any concrete. Mixing and Placing of all concrete shall be in accordance with ACI 301, ACI 318 and the IBC.

MIX DESIGN REQUIREMENTS

	Specified 28-Day Compressive Strength	Maximum Aggregate Size	Max. W/C Ratio	Air Content (%)
Foundations	3000 psi**	1 Inch	--	--
Foundation Stem Walls	3000 psi**	3/4 Inch	--	5.0
Interior SOG	2500 psi	3/4 Inch	0.60	--
Exterior SOG	3000 psi**	3/4 Inch	0.50	6.0

** Concrete Designed for 2500 psi. No Special Inspection Required.

W/C Ratio: Water-cementitious material ratios shall be based on the total weight of cementitious materials. Ratios not shown in the table above are controlled by strength requirements.

Cementitious Content: The use of fly ash, other pozzolans, silica fume, or slag shall conform to ACI standards. The amount of fly ash shall be a maximum of 20% of the total cementitious content unless reviewed and approved otherwise.

Air Content: Conform to ACI Standards. Horizontal exterior surfaces in contact with the soil require entrained air in accordance to ACI Table 4.2.2.4 for Severe Exposure. Tolerance is ±1.5%. Air content shall be measured at point of placement.

Slump: Conform to ACI Standards. Slump shall be determined at point of placement, a maximum of 4" unless approved otherwise.

CONCRETE REINFORCEMENT

All reinforcement shall conform to ASTM A-615 Grade 60 and made from new billets. Reinforcement to be welded shall conform to ASTM A-706 Grade 60 and be used only on the approval of the engineer of record. Welded Wire Fabric (WWF) shall be in accordance to ASTM A-185. Wire Mesh shall lap at least one grid at ends and edges.

Detail reinforcing steel in accordance with the most current edition of "ACI Manual of Standard Practice of Detailing Reinforced Concrete Structures."

Lap continuous reinforcement as indicated in the structural details for this project. Mechanical splices may be used when approved by the engineer of record.

Anchor bolts, dowels and other embedded items to be securely tied in place prior on the placement of concrete.

The following minimum cover shall be provided for reinforcement unless noted otherwise on drawings:

Concrete cast against and permanently exposed to earth	
All Reinforcement	3" Earth Face
Concrete exposed to earth or weather (cast in formwork)	
#3, #4 and #5 Bars	1-1/2"
#6 - #18 Bars	2"
Concrete not exposed to weather or in contact with ground	
Slabs, Walls and Joists #11 or smaller	3/4"
Beams and Columns	1-1/2"

Field Bending shall conform to ACI 301 "Field Bending or Straightening". Bar sizes #3 to #5 may be field bent cold once. Other sizes will require review of the method through the engineer of record. Do not twist bars.

STRUCTURAL STEEL

Design, fabrication and erection of structural steel shall conform to the specifications and standards of the American Institute of Steel Construction (AISC), as contained in the latest edition of "AISC Manual of Steel Construction".

All structural steel shall be erected plumb and true to line. Temporary bracing shall be installed and shall be left in place until other means are provided to adequately brace the structure.

STRUCTURAL STEEL GRADES

Wide Flange and WT Sections	ASTM A992, 50 ksi
Square or Rectangular HSS	ASTM A500, Grade B, 46 ksi
Plates, Angles, Channels	ASTM A36
High Strength Bolts	ASTM A325
Nuts	ASTM A536
Washers (Flat/Beveled)	ASTM F436
Anchor Bolts/Rods	ASTM F1554, Grade 36
Mild Threaded Rods	ASTM A36

Except as otherwise noted, all bolts shall be high strength bolts.

All connections not shown shall conform to the AISC Manual of Steel Construction and shall be submitted on shop drawings for review by the engineer of record prior to fabrication.

All fabrication shall be performed by a licensed fabricator. The fabricator shall maintain detailed fabrication and erection quality control procedures per IBC Section 1704.2 that provides a basis for inspection control and workmanship and insures the work is performed in accordance with Code of Standard Practice, the AISC Specification, and the Contact Documents. Fabricators certified by the AISC Quality Certification Program with an Sbd level of certification are deemed to comply with this provision.

WELDING

Welding shall conform to AWS D1.1 "Code for Welding in Building Construction" and the AISC "Specifications for the Design, Fabrication and Erection of Structural Steel Buildings".

All welders shall have evidence of passing the AWS Standard Qualification Tests and be certified for the work they are performing.

Welding of Structural Steel shall be performed per AWS D1.1 using E70XX electrodes unless noted otherwise.

Field welds have been indicated where they are expected to occur. The contractor shall determine the actual field welding necessary to complete the project.

WOOD

Materials:

Dimensional Lumber and Timbers (Solid Sawn):

- Visually graded lumber shall be Douglas Fir-Larch #2 or better.
- Visually graded timbers shall be Douglas Fir-Larch #1 or better.
- Finger-jointed studs are acceptable only at interior walls.
- The moisture content of all lumber shall be 19% or less at the time of construction.

Structural Glued Laminated Timbers (GLB):

- Structural Glulam timbers shall be manufactured and graded as required in ASTM D3737 and ANSI A190.1 and be stamped with an AITC quality mark or APA-EWS trademark.
- Glulam beams shall be Douglas Fir Combination 24F-V4 1.8E for simple span beams and 24F-V8 1.8E for continuous spans and cantilevers. Other glulam combinations with equivalent design properties may be used with written approval from the engineer of record.
- Stair stringers shall be Alaskan Cedar Combination 20F-V12 1.5E.
- Glulam columns shall be Douglas Fir Combination 2 1.8E.
- Glulam members shall be Framing or Industrial appearance.
- Camber: All stock glulam beams shall be cambered with a 3500' radius unless noted otherwise on plan. Stock beams with zero camber are acceptable where available.

Wood Structural Panel Sheathing:

- Wood structural panels shall conform to the requirements for its type in US Dept. of Commerce PS1 or PS2. The panels must be identified by the trademarks of the approving testing and inspection agency.
- Wood sheathing includes all veneer plywood and oriented strand board and shall be APA rated Exposure 1, unless noted otherwise.
- Wood sheathing shall have the following minimum thicknesses and span ratings, unless noted otherwise:

Wall	15/32" (32/16)	Plywood
Wall	7/16" (24/16)	Oriented Strand Board
Roof	7/16" (32/16)	Oriented Strand Board
Roof	19/32" (40/20)	
Floor	23/32" (48/24)	Tongue and Groove

- Install roof and floor panels with long dimension across two or more supports, unless noted otherwise. End joints shall occur at supports.
- Nails or other approved fasteners attaching sheathing to structure shall be driven with the head or crown flush with the surface of the sheathing. Do not overdrive fasteners.

Nails:

- All nails shall conform to the tolerances specified in ASTM F1667.
- All nails shall be common nails with the following specifications. Alternate nails may be used upon approval of the engineer of record:
-

Nail	Shank Diameter	Min. Penetration
6d	0.113"	1-1/4"
8d	0.131"	1-1/2"
10d	0.148"	1-5/8"
12d	0.148"	1-5/8"
16d	0.162"	1-3/4"

- Refer to the "Fastening Schedule" included with this plan set for general framing and carpentry connections.
- All connections in contact with pressure treated or fire treated wood shall be hot-dipped galvanized or stainless steel.

Bolts/Lag Screws:

- Anchor Bolts shall be Grade 36 conforming to ASTM F1554. All anchor bolts shall have a washer between the sill plate and nut.
- Connection Bolts shall be ASTM A307 Grade A/C
- Bolt holes shall be oversized no greater than 1/16" larger than the specified bolt diameter. Holes between main and side members shall be accurately aligned such the bolt is not forcibly driven.
- Provide a minimum standard cut washer or metal plate between the wood and bolt head and wood and nut.
- All connections in contact with pressure treated or fire treated wood shall be hot-dipped galvanized or stainless steel.

Connection Hardware:

- All connection hardware shall be supplied by Simpson Strong-Tie, Inc. Install hardware per the manufacturer's guidelines. Connection hardware of equal design properties by other manufacturers may be used with written approval from the engineer of record. All connections in contact with pressure treated or fire treated wood shall be hot-dipped galvanized or stainless steel.

Pre-Fabricated Wood Trusses:

- Pre-Fabricated metal plate wood trusses shall be designed by a Professional Engineer registered in the same state as the project location. Design, handling, erection and permanent bracing shall be in accordance to ANSI/TPI-1. All steel gusset plate connectors shall be galvanized and ICBO certified.
- Roof Truss Design Criteria

Top Chord Dead Load:	7.0 psf
Bottom Chord Dead Load:	8.0 psf
Top Chord Live Load (Snow):	**See Design Live Loads
Top Chord Live Load (Const):	20.0 psf (Non-concurrent with Snow)

** Loads caused by drifting, unbalanced or sliding snow are not accounted for in the uniform loads above.

- Designs shall include a top chord over-framing load of 8.0 psf at all overbuild locations. The structural, architectural and mechanical plans may show additional loading information. Loads shown on these other sheets shall be incorporate into the design and engineering of the trusses. Additional trusses may be required.
- The truss manufacturer shall verify all truss dimensions.
- The truss manufacturer shall design and supply all truss-to-truss connections.
- Truss deflection shall be limited to L/240 for total load and L/360 for live load.
- Shop Drawings: Complete calculations and shop drawings indicating all member forces, stresses, reactions, lumber grades, dimensions, truss-to-truss connections, pressed steel plates, shall be submitted to the engineer of record and local building official for review and approval prior to fabrication.
- The requirements for truss stability and erection shall comply with the Truss Plate Institute entitled "Commentary and Recommendations for Handling and Erecting Wood Trusses." The contractor shall have copies of these publications on site and be familiar with their contents. The contractor is responsible for temporary bracing and support of trusses during construction.

ABBREVIATIONS

∠	ANGLE
AB	ANCHOR BOLT
ADDL	ADDITIONAL
ALT	ALTERNATE
ARCH	ARCHITECTURAL
B	BOTTOM
B/	BOTTOM OF
BLDG	BUILDING
BLKG	BLOCKING
BP	BASE PLATE
BRG	BEARING
BTWN	BETWEEN
℄	CENTERLINE
C	CAMBER
CIP	CAST IN PLACE
CJ	CONSTRUCTION OR CONTROL JOINT
CJP	COMPLETE JOINT PENETRATION
CLR	CLEAR
CMU	CONCRETE MASONRY UNIT
COL	COLUMN
CONC	CONCRETE
CONN	CONNECTION
CONST	CONSTRUCTION
CONT	CONTINUOUS
CSINK	COUNTERSINK
CTRD	CENTERED
ø	DIAMETER
DB	DROP BEAM
DBA	DEFORMED BAR ANCHOR
DBL	DOUBLE
DF	DOUG-FIR LARCH
DIAG	DIAGONAL
DIST	DISTRIBUTED
DL	DEAD LOAD
DN	DOWN
DP	DEEP/DEPTH
DWG	DRAWING
(E)	EXISTING
EA	EACH
EF	EACH FACE
ELEV	ELEVATION
ELEC	ELECTRICAL
EMBED	EMBEDMENT
EQ	EQUAL
EQUIP	EQUIPMENT
EW	EACH WAY
EXP	EXPANSION
EXT	EXTERIOR
FD	FLOOR DRAIN
FDN	FOUNDATION
FIN	FINISH
FLR	FLOOR
FTG	FOOTING
F/	FACE OF
GA	GAGE
GALV	GALVANIZED
GL	GLUE LAMINATED BEAM
GWB	GYPSUM WALL BOARD
HDR	HEADER
HF	HEM-FIR
HGR	HANGER
HD	HOLD-DOWN
HORIZ	HORIZONTAL
HSS	HOLLOW STRUCTURAL SECTION
IBC	INTERNATIONAL BUILDING CODE
ID	INSIDE DIAMETER
IE	INVERT ELEVATION
IF	INSIDE FACE
INT	INTERIOR
k	KIPS
KSF	KIPS PER SQUARE FOOT
LF	LINEAL FEET
LL	LIVE LOAD
LLH	LONG LEG HORIZONTAL
LLV	LONG LEG VERTICAL
LP	LOW POINT
LONGIT	LONGITUDINAL
LSL	LAMINATED STRAND LUMBER
LVL	LAMINATED VENEER LUMBER
MAS	MASONRY
MAX	MAXIMUM
MECH	MECHANICAL
MEZZ	MEZZANINE
MFR	MANUFACTURER
MIN	MINIMUM
MISC	MISCELLANEOUS
NIC	NOT IN CONTRACT
NTS	NOT TO SCALE
OC	ON CENTER
OD	OUTSIDE DIAMETER
OF	OUTSIDE FACE
OPNG	OPENING
OPP	OPPOSITE
OSB	ORIENTATED STRAND BOARD
OWSJ	OPEN WEB STEEL JOIST
OWWJ	OPEN WEB WOOD JOIST
ℙ	PLATE
PAF	POWDER ACTUATED FASTENER
PC	PRECAST
PERP	PERPENDICULAR
PLWD	PLYWOOD
PP	PARTIAL PENETRATION
PREFAB	PREFABRICATED
PSF	POUNDS PER SQUARE FOOT
PSI	POUNDS PER SQUARE INCH
PSL	PARALLEL STRAND LUMBER
P-T	POST-TENSIONED
PT	PRESSURE TREATED
R	RADIUS
RD	ROOF DRAIN
REF	REFERENCE
REINF	REINFORCING
REQD	REQUIRED
SCHED	SCHEDULE
SHTHG	SHEATHING
SIM	SIMILAR
SOG	SLAB ON GRADE
SPEC	SPECIFICATION
SQ	SQUARE
SR	STUDRAIL
STAGG	STAGGERED
STD	STANDARD
STIFF	STIFFENER
STL	STEEL
SWWJ	SOLID WEB WOOD JOIST (I-JOIST)
SYM	SYMMETRICAL
T	TOP
T/	TOP OF
T&B	TOP AND BOTTOM
TC AX LD	TOP CHORD AXIAL LOAD
TCX	TOP CHORD EXTENSION
TDS	TIE DOWN SYSTEM
T&G	TONGUE AND GROOVE
THKND	THICKENED
THRD	THREADED
THRU	THROUGH
TRANSV	TRANSVERSE
TYP	TYPICAL
UNO	UNLESS NOTED OTHERWISE
VERT	VERTICAL
W	WIDE
w/	WITH
w/o	WITHOUT
WHS	WELDED HEADED STUD
WP	WORKING POINT
WWF	WELDED WIRE FABRIC
±	PLUS OR MINUS

SYMBOL LEGEND

MARK	DESCRIPTION	MARK	DESCRIPTION
F2.0	FOOTING CALLOUT (SEE SPREAD FOOTING SCHEDULE)		INDICATES WIDE FLANGE COLUMN
P6	SHEAR WALL CALLOUT (SEE TO SHEAR WALL SCHEDULE)		INDICATES HSS OR TS COLUMN
1	REVISION TRIANGLE		DENOTES WOOD POST OR BUNDLED STUDS
(4)2x	COLUMN IDENTIFICATION		DENOTES CONCRETE OR PRECAST COLUMN
T/?=0'-0" (NOTE)	ELEVATION AT POINT OF INDICATION (IE: T/SLAB, T/FTG, T/...)		DENOTES WOOD OR STEEL STUD WALL
?	INDICATES STEP		DENOTES MASONRY OR CMU WALL
#/SX.X	DETAILS OR SECTION CUT		DENOTES PRECAST OR TILT-UP CONCRETE WALL
? S9.9	DETAILS OR SECTION CUT IN PLAN VIEW		DENOTES WOOD STUD SHEAR WALL
? S7.7	ELEVATION CALLOUT		DENOTES BEARING WALL BELOW
	SPAN INDICATOR		DENOTES NON-BEARING WALL BELOW
	DENOTES DIRECTION OF DECK OR SHEATHING SPAN		DENOTES EXISTING WALL

CRAIG A. PENFIELD — STATE OF WASHINGTON — 42811 — REGISTERED PROFESSIONAL ENGINEER
06/21/16

REV	DATE	BY	REVISIONS

WCE
WHIPPLE CONSULTING ENGINEERS
2528 NORTH SULLIVAN ROAD
SPOKANE VALLEY, WA 99216
PH: 509-926-2017 / FAX: 509-926-0227

CIVIL | X STRUCTURAL | SURVEYING | TRAFFIC | PLANNING | LANDSCAPE | OTHER

LEGACY VILLAS
18 UNIT
LIBERTY LAKE, WA

DRAWN:	JDK
REVIEWED:	CAP
SCALE:	PER PLAN
PROJ #:	16-1624
DATE:	06/21/16

STRUCTURAL GENERAL NOTES

S1.1

P:\WCE_WORK\2016-WCE PROJECTS\2016-1624 Wyatt Arch - Copper Basin Liberty Lake Apt\DWG\STRUCTURAL\DRAWINGS\18-plex\2016-1624-S1X General Notes and Typical Details.dwg, 6/21/2016 2:06:23 PM, jamdk, DWG To PDF.pc3

STATEMENT OF SPECIAL INSPECTIONS

1. OWNER SHALL EMPLOY ONE OR MORE SPECIAL INSPECTORS TO PROVIDE INSPECTIONS DURING CONSTRUCTION. THE SPECIAL INSPECTOR SHALL DEMONSTRATE COMPETENCE, TO THE SATISFACTION OF THE BUILDING OFFICIAL, FOR INSPECTION OF THE PARTICULAR TYPE OF CONSTRUCTION OR OPERATION REQUIRING SPECIAL INSPECTION.
2. ALL INSPECTIONS SHALL BE PERFORMED BY INDEPENDENT SPECIAL INSPECTORS. JOB SITE VISITS BY THE STRUCTURAL ENGINEER OF RECORD OR BUILDING OFFICIAL DO NOT CONSTITUTE AND ARE NOT A SUBSTITUTE FOR INSPECTIONS BY A SPECIAL INSPECTOR.
3. ALL INSPECTION REPORTS SHALL BE SUBMITTED TO THE BUILDING OFFICIAL AND STRUCTURAL ENGINEER OF RECORD. THE FINAL REPORTS BY THE SPECIAL INSPECTOR(S) MUST CERTIFY THE ENTIRE STRUCTURAL SYSTEM COMPLIES WITH THE APPROVED PLANS AND SPECIFICATIONS.
4. IT IS SOLELY THE CONTRACTOR'S RESPONSIBILITY TO SEE THESE INSPECTIONS ARE PERFORMED.
5. WORK REQUIRING SPECIAL INSPECTION SHALL BE INSPECTED BY THE SPECIAL INSPECTOR WHO IS PRESENT IN THE AREA WHERE THE WORK IS BEING PERFORMED AND AT THE COMPLETION OF WORK. CONTINUOUS INSPECTION CONSISTS OF FULL-TIME INSPECTION; PERIODIC INSPECTION CONSISTS OF PART-TIME OR INTERMITTENT INSPECTION.
6. THE FOLLOWING SPECIAL INSPECTIONS ARE IN ADDITION TO INSPECTION BY THE BUILDING OFFICIAL. THIS LIST NOT INTENDED TO BE ALL-INCLUSIVE.

STRUCTURAL OBSERVATIONS

VISUAL STRUCTURAL OBSERVATIONS WILL BE PERFORMED AT THE DISCRETION OF THE OWNER, ARCHITECT, STRUCTURAL ENGINEER OF RECORD, AND AS REQUIRED BY THE BUILDING OFFICIAL IN ACCORDANCE WITH THE BUILDING CODE. VISUAL OBSERVATIONS SHALL NOT BE CONSIDERED AS A SUBSTITUTE FOR SPECIAL INSPECTION REQUIREMENTS.

1. IF STRUCTURAL OBSERVATIONS ARE TO BE PROVIDED, IT IS THE RESPONSIBILITY OF THE GENERAL CONTRACTOR TO NOTIFY THE STRUCTURAL ENGINEER OF RECORD AS TO WHEN EACH MAJOR PHASE OF CONSTRUCTION, AS NOTED BELOW, IS READY FOR OBSERVATION A MINIMUM OF (3) WORKING DAYS IN ADVANCE.

- FOUNDATION REBAR AND ANCHORS – PRIOR TO POURING CONCRETE
- STRUCTURAL FRAMING – AFTER ERECTION AND PRIOR TO CLOSING IN
- RAISED FLOOR SLABS AND REBAR – PRIOR TO POURING CONCRETE
- ROOF NAILING – PRIOR TO INSTALLING ROOFING AND CRICKETS
- COMPLETION OF THE STRUCTURAL SYSTEM

2. THE CONTRACTOR SHALL BE RESPONSIBLE FOR ENSURING THAT NAILING, REINFORCEMENT, WELDS, CONNECTIONS, ETC. ARE VISIBLE FOR OBSERVATION WHEN THE STRUCTURAL ENGINEER OF RECORD IS ON SITE AND FOR ANY SCHEDULING DELAYS DUE TO NONCOMPLIANT ITEMS FOUND DURING THE OBSERVATION.

3. AT THE CONCLUSION OF THE WORK INCLUDED IN THE PERMIT, THE STRUCTURAL OBSERVER SHALL SUBMIT TO THE BUILDING OFFICIAL A WRITTEN STATEMENT ABOUT ANY SITE VISITS THAT HAVE BEEN MADE AND IDENTIFY ANY REPORTED DEFICIENCIES THAT, TO THE BEST OF THE STRUCTURAL OBSERVER'S KNOWLEDGE, HAVE NOT BEEN RESOLVED.

SCHEDULE OF SPECIAL INSPECTION

SPECIAL INSPECTION TYPE	CONT, PERIODIC, SUBMITTAL, NONE	NOTES/REMARKS
FABRICATION AND IMPLEMENTAION PROCEDURES – STRUCTURAL STEEL (IBC 1704.2.5.1)		
Fabrication Procedures: Review of fabricator's written procedural and quality control manuals and periodic auditing of fabrication practices by an approved special inspection agency. --OR-- AISC Certification	N/A	
At the completion of fabrication, the approved fabricator shall submit a certificate of compliance to the building code official stating the work was performed in accordance with the approved construction documents.	N/A	
FABRICATION AND IMPLEMENTAION PROCEDURES – WOOD TRUSSES (IBC 1704.2.5.1)		
Fabrication Procedures: Review of fabricator's written procedural and quality control manuals and periodic auditing of fabrication practices by an approved special inspection agency. --OR-- TPI Inspection Program: Fabricator shall participate in the TPI Quality Assurance Inspection Program, and maintain a copy of the Quality Assurance Procedures Manual, QAP-90. Submit copy of certificate. All trusses shall bear the TPI Registered Mark.	SUBMITTAL	
At the completion of fabrication, the approved fabricator shall submit a certificate of compliance to the building code official stating the work was performed in accordance with the approved construction documents.	SUBMITTAL	
SOILS (IBC 1705.6)		
Excavation	PERIODIC	Verify excavations are extended to proper depth and have reached proper material.
Subgrade	PERIODIC	Prior to placement of compacted fill, observe subgrade to verify site has been properly prepared.
Soil Bearing Capacity	PERIODIC	Verify materials below shallow foundations are adequate to achieve the design bearing capacity.
Fill	PERIODIC	Verify use of proper materials, densities, and lift thicknesses during placement and compaction of fill.
CONCRETE (IBC 1705.3)		Special inspection not required for Concrete work on this project per exemptions of IBC 1705.3
Reinforcing Placement	**	Verify prior to placing concrete that reinforcing is of specified type, grade and size; that it is free of oil, dirt, rust; that it is located and spaced properly; that hooks, bends, ties, stirrups, and supplemental reinforcing are placed correctly; that lap lengths, stagger and offsets are provided; and that all mechanical connections are installed per the manufacturer's instructions and/or evaluation report.
Anchor Bolts	**	Verify size, spacing and embedment meets the requirements of this construction document.
Hold-Down Anchor Bolt Placement	**	Verify specified cast-in-place anchor, location and embedment meets the requirements of this construction document.
Formwork	**	Verify that forms are placed plumb and conform to the shapes, lines, and dimensions of the members as required by the approved construction documents.
Use of Required Mix Design	**	Verify that all mixes used comply with the approved construction documents; ACI 318: Ch 4, 5.2-5.4 and IBC 1904.2, 1910.2 & 1910.3
Concrete Sampling for Strength Tests, Slump, Air Content and Temperature	**	Submit reports as defined in Concrete Section of the Structural General Notes
Concrete Placement	**	
Inspection and Maintenance of specified curing techniques and temperatures.	**	
Adhesive Anchors	CONT	All post-installed adhesive anchors/dowels shall be specially inspected as required by the approved ICC-ES Report.
Titen HD	PERIODIC	Simpson Titen HD Anchors shall be specially inspected as required by the approved ICC-ES Report.
STRUCTURAL STEEL (IBC 1704.3.3)		
High Strength Bolting	N/A	Verify that all joints use proper fastener components, connected elements are fabricated properly, the bolted joint is drawn into firm contact and that nuts cannot be removed without use of a wrench.
FIELD WELDING (IBC 1705.2.2.1)		
Single Pass Fillet Welds 5/16" or Less	N/A	Pre-welding inspections are to be performed to ensure that proper materials (i.e. structural steel, weld filler material, etc.), welding procedures, and welding personnel qualifications are appropriate. A visual inspection of all welds must be provided with periodic inspections made of work in progress.
Embedded Plates		
WOOD FRAME (IBC 1705.5, 1705.10.1 & 1705.11.2)		
Shear Wall and Diaphragm Nailing	PERIODIC	If fastener spacing is < 4" on center: Verify proper nailing, bolting, anchoring and other fastening of shear walls and diaphragms has occurred.
Shear Wall and Diaphragm Connectors and Hold-Downs/Straps	PERIODIC	Verify proper nailing, bolting, anchoring and other fastening of hold-downs, floor-to-floor straps, drag connection and all other shear wall and diaphragm connector has occurred as required by the approved ICC-ES Report.
Wood Trusses > 60-feet	CONT	Verify that temporary and permanent truss bracing is installed in accordance with approved truss package.

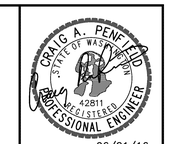

06/21/16

REV	DATE	BY	REVISIONS

WHIPPLE CONSULTING ENGINEERS
2528 NORTH SULLIVAN ROAD
SPOKANE VALLEY, WA 99216
PH: 509-926-2017 / FAX: 509-926-0227

CIVIL
X STRUCTURAL
SURVEYING
TRAFFIC
PLANNING
LANDSCAPE
OTHER

LEGACY VILLAS
18 UNIT

LIBERTY LAKE, WA

DRAWN:	JDK
REVIEWED:	CAP
SCALE:	PER PLAN
PROJ #:	16-1624
DATE:	06/21/16

STRUCTURAL GENERAL NOTES

S1.2

P:\WCE_WORK\2016 WCE PROJECTS\2016-1624 Wyatt Arch - Copper Basin (Liberty Lake Apt)\CIVIL\STRUCTURAL\DRAWINGS\18 plex\2016-1624-S1.5 General Notes and Typical Details.dwg 6/21/2016 2:06:16 PM jamesb, DWG to PDF.pc3

TABLE 2304.9.1 FASTENING SCHEDULE

CONNECTION	FASTENING[a,m]	LOCATION
1. Joist to sill or girder	3–8d common (2½" x 0.131") 3–3" x 0.131" nails 3–3" x 14 gage staples	toenail
2. Bridging to joist	2–8d common (2½" x 0.131") 2–3" x 0.131" nails 2–3" x 14 gage staples	toenail each end
3. 1" x 6" subfloor to each joist	2–8d common (2½" x 0.131")	face nail
4. Wider than 1" x 6" subfloor to each joist	3–8d common (2½" x 0.131")	face nail
5. 2" subfloor to joist or girder	2–16d common (3½" x 0.162")	blind and face nail
6. Sole plate to joist or blocking	16d (3½" x 0.135") at 16" o.c. 3" x 0.131" nails at 8" o.c. 3" 14 gage staples at 12" o.c.	typical face nail
Sole plate to joist or blocking at braced wall panel	3–16d (3½" x 0.135") at 16" o.c. 4–3" x 0.131" nails at 16" o.c. 4–3" 14 gage staples at 16" o.c.	braced wall panels
7. Top plate to stud	2–16d common (3½" x 0.162") 3–3" x 0.131" nails 3–3" 14 gage staples	end nail
8. Stud to sole plate	4–8d common (2½" x 0.131") 4–3" x 0.131" nails 3–3" 14 gage staples	toenail
	2–16d common (3½" x 0.162") 3–3" x 0.131" nails 3–3" 14 gage staples	end nail
9. Double studs	16d (3½" x 0.135") at 24" o.c. 3" x 0.131" nails at 8" o.c. 3" 14 gage staples at 8" o.c.	face nail
10. Double top plates	16d (3½" x 0.135") at 16" o.c. 3" x 0.131" nails at 12" o.c. 3" 14 gage staples at 12" o.c.	typical face nail
Double top plates	8–16d common (3½" x 0.162") 12–3" x 0.131" nails 12–3" 14 gage staples	lap splice
11. Blocking between joists or rafters to top plate	3–8d common (2½" x 0.131") 3–3" x 0.131" nails 3–3" 14 gage staples	toenail
12. Rim joist to top plate	8d (2½" x 0.131") at 6" o.c. 3" x 0.131" nails at 6" o.c. 3" 14 gage staples at 6" o.c.	toenail
13. Top plates, laps and intersections	2–16d common (3½" x 0.162") 3–3" x 0.131" nails 3–3" 14 gage staples	face nail
14. Continuous header, two pieces	16d common (3½" x 0.162")	16" o.c. along edge
15. Ceiling joists to plate	3–8d common (2½" x 0.131") 5–3" x 0.131" nails 5–3" 14 gage staples	toenail
16. Continuous header to stud	4–8d common (2½" x 0.131")	toenail
17. Ceiling joists, laps over partitions (see Section 2308.10.4.1, Table 2308.10.4.1)	3–16d common (3½" x 0.162") minimum, Table 2308.10.4.1 4–3" x 0.131" nails 4–3" 14 gage staples	face nail
18. Ceiling joists to parallel rafters (see Section 2308.10.4.1, Table 2308.10.4.1)	3–16d common (3½" x 0.162") minimum, Table 2308.10.4.1 4–3" x 0.131" nails 4–3" 14 gage staples	face nail
19. Rafter to plate (see Section 2308.10.1, Table 2308.10.1)	3–8d common (2½" x 0.131") 3–3" x 0.131" nails 3–3" 14 gage staples	toenail
20. 1" diagnol brace to each stud and plate	2–8d common (2½" x 0.131") 2–3" x 0.131" nails 3–3" 14 gage staples	face nail
21. 1" x 8" sheathing to each bearing	3–8d common (2½" x 0.131")	face nail
22. Wider 1" x 8" sheathing to each bearing	3–8d common (2½" x 0.131")	face nail
23. Built-up corner studs	16d common (3½ x 0.162") 3" x 0.131" nails 3" 14 gage staples	24" o.c. 16" o.c. 16" o.c.
24. Built-up girder and beams	20d common (4" x 0.192") 32" o.c. 3" x 0.131" nails at 24" o.c. 3" 14 gage staples at 24" o.c.	face nail at top and bottom staggered on opposite sides
	2–20d common (4" x 0.192") 3–3" x 0.131" nails 3–3" 14 gage staples	face nail at ends and at each splice
25. 2" planks	16d common (3½" x 0.162")	at each bearing
26. Collar tie to rafter	3–10d common (3" x 0.148") 4–3" x 0.131" nails 4–3" 14 gage staples	face nail
27. Jack rafter to hip	3–10d common (3" x 0.148") 4–3" x 0.131" nails 4–3" 14 gage staples	toenail
	2–16d common (3½" x 0.162") 3–3" x 0.131" nails 3–3" 14 gage staples	face nail
28. roof rafter to 2-by ridge beam	2–16d common (3½" x 0.162") 3–3" x 0.131" nails 3–3" 14 gage staples	toenail
	2–16d common (3½" x 0.162") 3–3" x 0.131" nails 3–3" 14 gage staples	face nail
29. Joist to band joist	3–16d common (3½" x 0.162") 4–3" x 0.131" nails 4–3" 14 gage staples	face nail
30. Ledger strip	3–16d common (3½" x 0.162") 4–3" x 0.131" nails 4–3" 14 gage staples	face nail at each joist

TABLE 2304.9.1 CONTINUED FASTENING SCHEDULE

CONNECTION	FASTENING[a,m]		LOCATION
31. Wood structure panels and particleboard[b] Subfloor, roof, and wall sheathing (to framing)	½" and less	6d[c,1] 2⅜" x 0.113" nail[n] 1¾" 16 gage[o]	
	19/32" to ¾"	8d[d] or 6d[e] 2⅜" x 0.113" nail[p] 2" 16 gage[p]	
	⅞"	8d[c]	
	1⅛" to 1 ¼"	10d[d] or 8d[e]	
Single floor (combination subfloor–unerlayment to framing)	¾" and less	6d[e]	
	⅞"	8d[e]	
	1⅛" to 1¼"	10d[d] or 8d[e]	
32. Panel siding (to framing)	½" and less	6d[f]	
	⅝"	8d[f]	
33. Fiberboard sheathing[g]	½"	No. 11 gage roofing nail[h] 6d common nail (2" x 0.113")[i] No. 16 gage staple	
	25/32"	No. 11 gage roofing nail[h] 8d common nail (2½" x 0.131)[i] No. 16 gage staple	
34. Interior paneling	¼"	4d[j]	
	⅜"	6d[k]	

For SI: 1 inch=25.4 mm
a. Common or box nails are permitted to be used except where otherwise stated.
b. Nails spaces at 6 inches in center at edges. 12 inches at intermediate supports except 6 inches at supports where spans are 48 inches or more. for nailing of wood structural panel and particleboard diaphragms and shear walls, refer to section 2305. Nails for wall sheathing are permitted to be common, box or casing.
c. Common or deformed shank (6d – 2" x 0.113"; 8d – 2½" x 0.131"; 10d – 3" x 0.148").
d. Common (6d – 2" x 0.113"; 8d – 2½" x 0.131"; 10d – 3" x 0.148").
e. Deformed shank (6d – 2" x 0.113"; 8d – 2½" x 0.131"; 10d – 3" x 0.148").
f. Corrosion-resistant siding (6d – 1⅞" x 0.106"; 8d – 2⅜" x 0.128) or casing (6d – 2" x 0.099"; 8d – 2½" x 0.113") nail
g. Fasteners spaced 3 inches on center at exterior edges and 6 inches on center at intermediate supports, when used as structural sheathing. Spacing shall be 6 inches on center on edges and 12 inches on center at intermediate supports for nonstructural applications.
h. Corrosion-resistant roofing nails with 7/16-inch-diameter head and 1½-inch length got ½-inch sheathing and 1¾-inch length for 25/32-inch sheathing
i. Corrosion-resistant staples with normal 7/16-inch crown or 1-inch crown and ¼-inch length for ½-inch length for 25/32-inch sheathing. Panel supports at 16 inches (20 inches if strength axis in the long direction of the panel, unless otherwise marked).
j. Casing (1½" x 0.080") or finish (1½" x 0.072") nails spaced 6 inches on panel edges, 12 inches at intermediate supports.
k. Panel supports at 24 inches. Casing or finish nails spaces 6 inches on panel edges, 12 inches at intermediate supports.
l. For roof sheathing applications, 3d nails (2½" x 0.113") are the minimum required for wood structural panels.
m. Staples shall have a minimum crown width of 7/16 inch.
n. For roof sheathing applications, fasteners spaced 4 inches on center at edges, 8 inches at intermediate supports.
o. Fasteners spaced 4 inches on center at edges, 8 inches at intermediate supports for subfloor and wall sheathing and 3 inches on center at edges, 6 inches at intermediate supports for roof sheathing.
p. Fasteners spaced 4 inches on center at edges, 8 inches at intermediate supports.

TENSION STRAP SCHEDULE (DF-L)

STRAP	MIN END STUDS	FASTENERS	CAPACITY (LB)	ADDITIONAL INFO:
CS16	2x	(22) 0.131"ø NAILS	1,705	CUT LENGTH = 26" + CLEAR SPAN
MST37	(2)2x	(20) 0.162"ø NAILS	2,170	
MST48	(2)2x	(32) 0.162"ø NAILS	3,695	
MST60	(2)2x	(46) 0.162"ø NAILS	4,830	

NOTES:

1. SOME STRAP TYPES NOTED MAY NOT BE USED ON THIS PROJECT.
2. PROVIDE PANEL EDGE NAILING PER SHEAR WALL SCHEDULE AT TENSION STRAP STUDS/POST.
3. CAPACITIES INCLUDE 1.33 STRESS INCREASE.
4. MINIMUM NAIL LENGTHS SHALL BE 2½" FOR 0.131"ø, 3" FOR 0.148"ø AND 3½" FOR 0.162"ø UNO.
5. TOTAL NAILS SPECIFIED, USE HALF THE NAILS AT THE STUDS ABOVE AND BELOW LEVEL BEING CONNECTED. REFERENCE SIMPSON CATALOG FOR DEFINITION OF CLEAR SPAN AND NAIL LOCATIONS.
6. FOR STRAP LENGTHS AND ADDITIONAL INSTALLATION INFORMATION CONSULT CURRENT SIMPSON CATALOG.

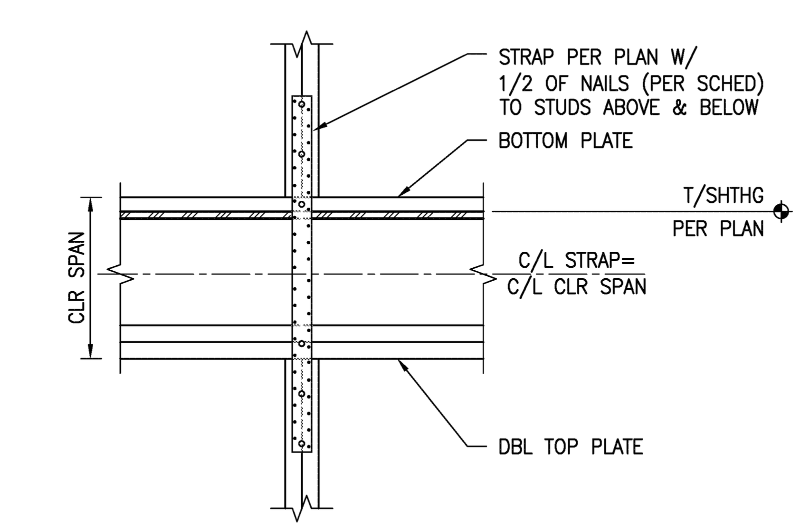

6 TENSION STRAP SCHEDULE AND TYPICAL STRAP CONNECTION AT FLOOR FRAMING
SCALE: 3/4" = 1'-0"

SHEAR WALL SCHEDULE (DF-L)

SHEATHING AND FASTENING					MINIMUM FRAMING MEMBERS					SHEAR TRANSFER CONNECTIONS			CAPACITY
TAG	GWB & APA RATED PLYWOOD/OSB SHEATHING THICKNESS	PANEL EDGE FASTENING	PANEL FIELD FASTENING	FASTENER SIZE (13)	BOTTOM PLATE	PT SILL PLATE	ABUTTING PANEL EDGE	PANEL EDGE BLKG	MAX STUD SPACING	SILL PLATE CONNECTION TO FOUNDATION	BOTTOM PLATE TO RIM/BLKG	RIM/BLKG CONNECTION TO TOP PLATE	
G4	½" GWB ONE FACE	4" OC	12" OC	#6x1¼" TYPE 'W'	2x	2x	2x	2x	16" OC	½" @ 72" OC	0.148"øx3¼" @ 8" OC	A35 @ 32" OC	165 PLF
P6	15/32" ONE SIDE	6" OC	12" OC	0.131"ø	2x	2x	2x	2x	24" OC	⅝" @ 48" OC	0.148"øx3¼" @ 8" OC	A35 @ 32" OC	260 PLF
P4	15/32" ONE SIDE	4" OC	12" OC	0.131"ø	2x	2x	(2)2x	(2)2x	24" OC	⅝" @ 48" OC	0.148"øx3¼" @ 6" OC	A35 @ 16" OC	380 PLF
P3	15/32" ONE SIDE	3" OC	12" OC	0.131"ø	2x	2x	(2)2x	(2)2x	24" OC	⅝" @ 32" OC	0.148"øx3¼" @ 4" OC	A35 @ 16" OC	490 PLF
2P4	15/32" BOTH SIDE	4" OC	12" OC	0.131"ø	2x	3x	(2)2x	(2)2x	16" OC	⅝" @ 16" OC	0.148"øx3¼" @ 6" OC (2) ROWS STAGGERED	A35 @ 8" OC	760 PLF
2P3	15/32" BOTH SIDE	3" OC	12" OC	0.131"ø	2x	3x	(2)2x	(2)2x	16" OC	⅝" @ 16" OC	0.148"øx3¼" @ 4" OC (2) ROWS STAGGERED	A35 @ 8" OC	980 PLF

NOTES:

1. SCHEDULE ASSUMES DOUGLAS-FIR FRAMING AND IS IN CONFORMANCE WITH THE 2012 IBC. GYPSUM WALLBOARD (GWB) SHEAR WALLS SHALL NOT BE USED IN SEISMIC DESIGN CATEGORIES E OR F. ALL PANEL EDGES SHALL BE BLOCKED.
2. REFERENCE THE TYPICAL SHEAR WALL ELEVATION FOR ADDITIONAL INFORMATION.
3. INSTALL PANELS EITHER HORIZONTALLY OR VERTICALLY. 7/16" APA-RATED SHEATHING (OSB) MAY BE USED IN PLACE OF 15/32" SHEATHING PROVIDED THAT ALL STUDS ARE SPACED AT 16" OC.
4. WHERE SHEATHING IS APPLIED TO BOTH SIDES OF WALL, PANEL EDGE JOINTS ON 2X FRAMING SHALL BE STAGGERED SO THAT JOINTS ON OPPOSITE SIDES ARE NOT LOCATED ON THE SAME STUD.
5. PROVIDE SHEAR WALL SHEATHING AND NAILING FOR THE ENTIRE LENGTH OF THE WALLS INDICATED ON THE PLANS. ENDS OF FULL HEIGHT WALLS ARE DESIGNATED BY WINDOWS, OR DOORWAYS OR AS DESIGNATED ON THE PLANS. FOR HOLD-DOWN REQUIREMENTS, REFERENCE PLANS. WALLS DESIGNATED AS PERFORATED SHEAR WALLS REQUIRE SHEATHING ABOVE AND BELOW ALL OPENINGS.
6. SHEATHING EDGE NAILING IS REQUIRED AT ALL HOLD-DOWN POSTS. EDGE NAILING MAY ALSO BE REQUIRED TO EACH STUD USED IN BUILT-UP HOLD-DOWN POSTS. FOR ADDITIONAL INFORMATION, REFERENCE THE HOLD-DOWN DETAILS.
7. INTERMEDIATE FRAMING TO BE 2x MINIMUM MEMBERS. DOUBLE 2x STUDS SHALL BE CONNECTED TOGETHER NAILING THE STUDS TOGETHER WITH NAILS OF THE SAME SIZE AND SPACING AS THE BOTTOM PLATE TO RIM/BLKG CONNECTION.
8. FRAMING CLIPS TO BE MANUFACTURED BY SIMPSON STRONG-TIE. SHEAR VALUES BASED ON 0.131"øx1½" NAILS USED TO ATTACH FRAMING CLIPS DIRECTLY TO FRAMING, USE 0.131"øx2½" NAILS WHERE INSTALLED OVER SHEATHING.
9. WHERE BOTTOM PLATE ATTACHMENT SPECIFIES (2) ROWS OF NAILS, PROVIDE DOUBLE JOIST, RIM JOIST OR EQUAL BELOW. STAGGER NAILS IN ROWS 1½" APART MINIMUM.
10. PRESSURE TREATED MATERIAL CAN CAUSE EXCESSIVE CORROSION IN THE FASTENERS. PROVIDE HOT-DIPPED GALVANIZED (ELECTRO-PLATING IS NOT ACCEPTABLE) NAILS, CONNECTOR PLATES (FRAMING ANGLES, ETC.) AND FOR ALL CONNECTORS IN CONTACT WITH PRESSURE TREATED FRAMING MEMBERS. FOR ADDITIONAL INFORMATION, REFERENCE STRUCTURAL NOTES.
11. SIMPSON TITEN HD ANCHOR BOLTS (MIN 8" LENGTH) CAN BE USED AS A 1-TO-1 (SIZE AND SPACING) REPLACEMENT FOR CAST-IN-PLACE ANCHOR BOLTS. CONTACT THE STRUCTURAL ENGINEER OF RECORD FOR OTHER ADHESIVE OR EXPANSION BOLT ALTERNATIVES TO CAST-IN-PLACE ANCHOR BOLTS. SPECIAL INSPECTION MAY BE REQUIRED.
12. NAIL STUDS TO 3x SILL PLATES WITH EITHER (2) 0.148"øx4" END NAILS OR (4) 0.131"øx2½" TOENAILS.
13. MINIMUM NAIL LENGTHS SHALL BE 2½" FOR 0.131"ø, 3" FOR 0.148"ø AND 3½" FOR 0.162"ø UNO.

HOLDOWN SCHEDULE (DF-L)

HOLD DOWN	MIN END STUDS	FASTENERS	CAPACITY (LB)	ANCHORAGE TO CONCRETE			
				CAST-IN-PLACE	MECHANICAL	ADHESIVE	
HDU2	(2)2x	(6) SDS ¼"x2½"	3,075	SB ⅝x24	TITEN HD ⅝x8		
HDU4	(2)2x	(10) SDS ¼"x2½"	4,565	SB ⅝x24	N/A		
HDU5	(2)2x	(14) SDS ¼"x2½"	5,645	SB ⅝x24	N/A		
HDU8	(3)2x	(20) SDS ¼"x2½"	7,870	SB ⅞x24	N/A		

NOTES:

1. SOME HOLD-DOWN TYPES NOTED MAY NOT BE USED ON THIS PROJECT.
2. PROVIDE PANEL EDGE NAILING PER SHEAR WALL SCHEDULE AT HOLD-DOWN STUDS/POST.
3. CAPACITIES INCLUDE 1.33 STRESS INCREASE.
4. BASED ON MINIMUM f'c = 2500 PSI CONCRETE.
5. STEM WALLS SHALL BE 6" WIDE MINIMUM FOR ⅝"ø ANCHOR BOLTS AND 8" WIDE MINIMUM FOR ⅞"ø AND LARGER ANCHOR BOLTS.
6. CAST-IN-PLACE (CIP) TYPE ANCHOR BOLTS AT HOLD-DOWNS SHALL HAVE A HEX HEAD WITH A STANDARD CUT WASHER OR A STANDARD HOOK (MINIMUM 3x BOLT DIAMETER).
7. CONTACT ENGINEER FOR POST INSTALLED HOLD-DOWN OPTIONS.
8. THREADED ROD WITH SIMPSON SET OR HILTI HY-200 ADHESIVE.
9. FOR ⅝"ø ANCHOR BOLT, USE STANDARD CUT WASHER BETWEEN SEAT OF ANCHOR AND NUT.
10. TITEN HD SHALL BE USED AT INTERIOR WALLS WHERE HDU2 ARE REQUIRED. SB⅝x24 SHALL ONLY BE USED AT EXTERIOR WALLS

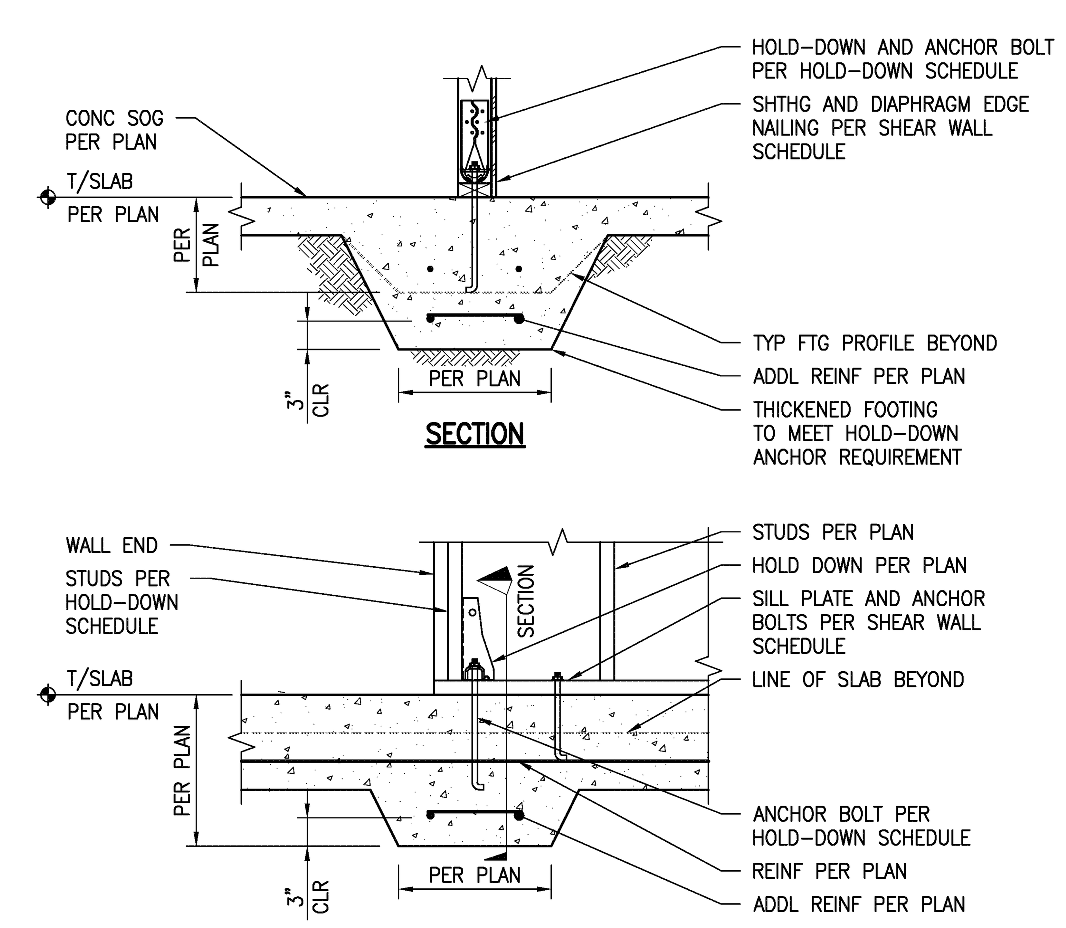

10 HOLD-DOWN SCHEDULE AND TYPICAL HOLD-DOWN ANCHOR AT THICKENED SLAB FOOTING
SCALE: 3/4" = 1'-0"

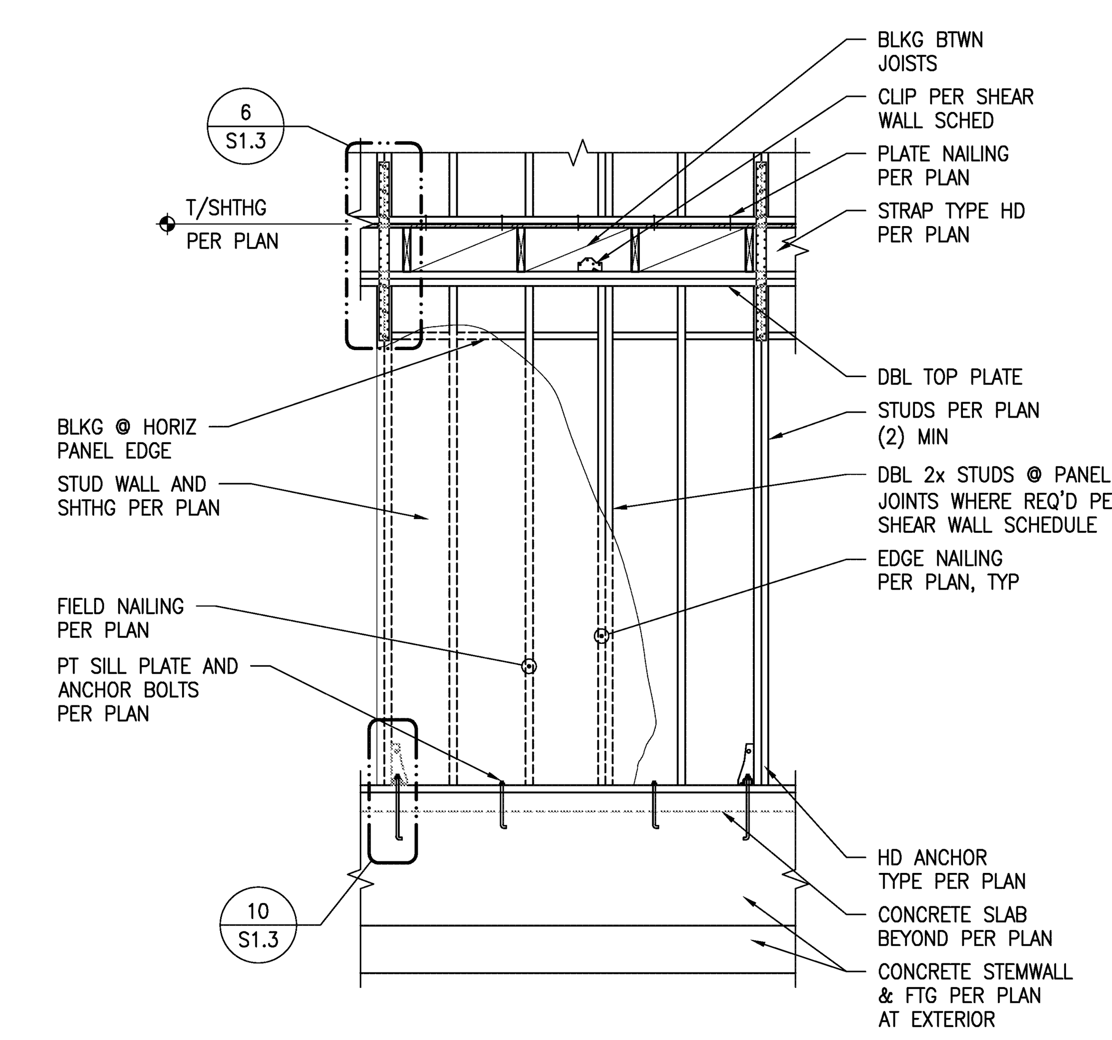

12 TYPICAL SHEAR WALL ELEVATION
SCALE: 3/8" = 1'-0"

CRAIG A. PENFIELD
STATE OF WASHINGTON
42811
REGISTERED PROFESSIONAL ENGINEER
06/21/16

REV	DATE	BY	REVISIONS

WCE
WHIPPLE CONSULTING ENGINEERS
2528 NORTH SULLIVAN ROAD
SPOKANE VALLEY, WA 99216
PH: 509-893-2617 FAX: 509-926-0227

CIVIL
X STRUCTURAL
SURVEYING
TRAFFIC
PLANNING
LANDSCAPE
OTHER

LEGACY VILLAS
18 UNIT
LIBERTY LAKE, WA

DRAWN:	JDK
REVIEWED:	CAP
SCALE:	PER PLAN
PROJ #:	16-1624
DATE:	06/21/16

SHEARWALLS, HOLD-DOWNS, AND NAILING SCHEDULE

S1.3

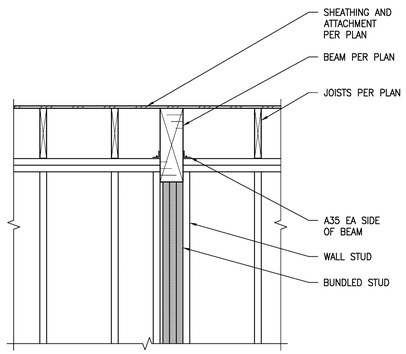

1 TYPICAL FLUSH BEAM FRAMING PARALLEL TO JOISTS
SCALE: 3/4" = 1'-0"

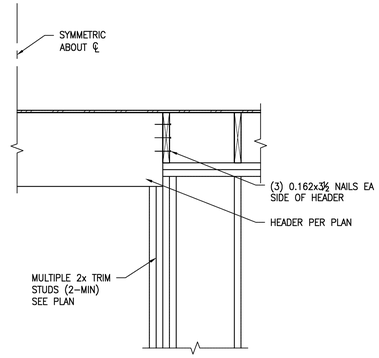

2 TYPICAL FLUSH BEAM FRAMING
SCALE: 3/4" = 1'-0"

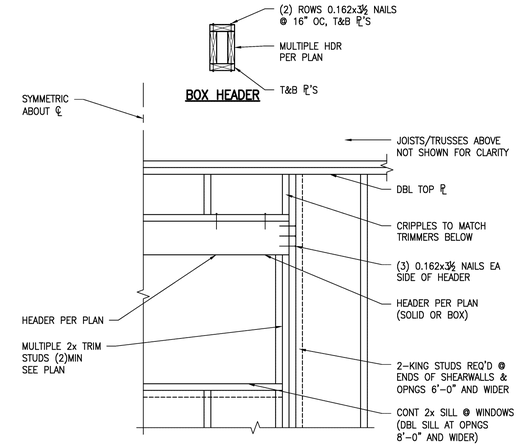

3 TYPICAL HEADER FRAMING @ STRUCTURAL WALL
SCALE: 3/4" = 1'-0"

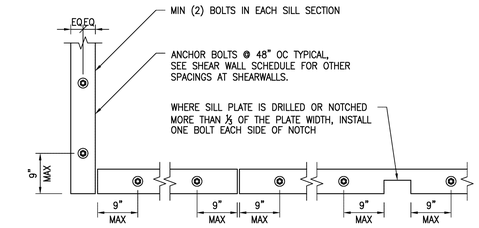

4 TYPICAL SILL PLATE BOLTING
SCALE: 3/4" = 1'-0"

NOTES:

1. PRESCRIPTIVE GUIDELINES FOR ALLOWABLE HOLES ARE FOR SIMPLY SUPPORTED SINGLE SPAN BEAMS CARRYING UNIFORM GRAVITY (VERTICAL) LOADS PERPENDICULAR TO THE WIDE FACES OF THE LAMINATIONS.
2. DRILLING HOLES IN MULTI-SPAN BEAMS OR BEAMS WITH CONCENTRATED LOADS MUST BE APPROVED BY THE ENGINEER OF RECORD.
3. WHEN PRESCRIPTIVE GUIDELINES ARE NOT MET, ALL DRILLED HOLES MUST BE APPROVED BY THE ENGINEER OF RECORD.
4. DRILLED HOLES ARE NOT ALLOWED IN CRITICAL ZONES AS INDICATED ON DETAIL ABOVE WITHOUT APPROVAL OF THE ENGINEER OF RECORD.
5. VERTICAL HOLES IN BEAM MUST BE APPROVED BY THE ENGINEER OF RECORD.
6. NOTCHES IN BEAM MUST BE APPROVED BY THE ENGINEER OF RECORD.
7. MAXIMUM NUMBER OF HOLES SHALL NOT EXCEED (1) HOLES PER EACH 5'-0" LENGTH OF BEAM.
8. D=MAX HOLE DIAMETER (IN.). MAXIMUM HOLE ø SHALL BE 1¾" OR A HOLE DIAMETER EQUAL TO 1/10 BEAM DEPTH, WHICHEVER IS SMALLER.

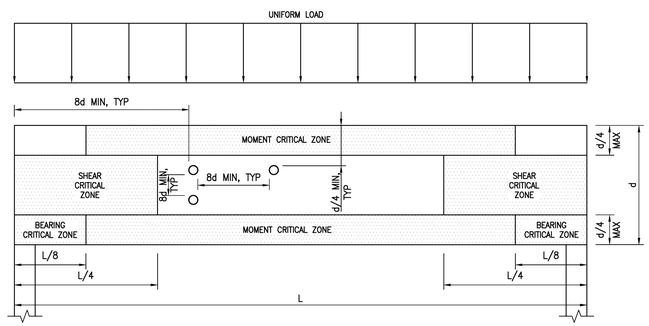

5 PENETRATIONS IN GLU-LAM BEAMS
SCALE: N.T.S.

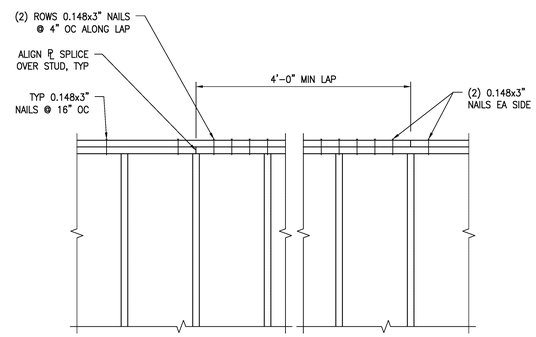

7 TYPICAL SPLICE OF DOUBLE TOP PLATE
SCALE: 3/4" = 1'-0"

BEARING WALLS AND SHEAR WALLS		
STUD SIZE	MAX. DRILLED HOLE SIZE	MAXIMUM NOTCH DEPTH
2x4	1" ø	⅞"
2x6	2" ø	1⅜"
2x8	3" ø	1⅞"

TOP & BOT. PLATES (SHEAR WALLS ONLY)			
PLATE SIZE	MAX. DRILLED HOLE SIZE	MIN. EDGE DISTANCE	MAXIMUM NOTCH
2x4	1" ø	1"	NOT ALLOWED
2x6	2" ø	1½"	NOT ALLOWED
2x8	3" ø	2"	NOT ALLOWED

NOTES:

1. PRESCRIPTIVE GUIDELINES FOR ALLOWABLE HOLES ARE FOR SIMPLY SUPPORTED SINGLE SPAN BEAMS, JOISTS AND RAFTERS CARRYING UNIFORM GRAVITY (VERTICAL) LOADS PERPENDICULAR TO THE SHORT DIMENSION OF MEMBERS.
2. DRILLING HOLES IN MULTI-SPAN MEMBERS OR MEMBERS WITH CONCENTRATED LOADS MUST BE APPROVED BY THE ENGINEER OF RECORD.
3. WHEN PRESCRIPTIVE GUIDELINES ARE NOT MET, ALL DRILLED HOLES MUST BE APPROVED BY THE ENGINEER OF RECORD.
4. VERTICAL HOLES IN MEMBERS MUST BE APPROVED BY THE ENGINEER OF RECORD.
5. d= ACTUAL DEPTH OF MEMBER (NOT NOMINAL)
6. TO OBTAIN THE d/4 DEPTH OF NOTCH LOCATED IN THE TOP RIGHT CORNER OF THE DIAGRAM, THE NOTCH MUST BE CONTAINED WITHIN A DISTANCE FROM THE FACE OF SUPPORT NOT GREATER THAN THE DEPTH, d, OF THE MEMBER. THE WIDTH OF THE NOTCH MUST NOT BE GREATER THAN d/3.
7. MAXIMUM NUMBER OF HOLES SHALL NOT EXCEED (2) HOLES PER EACH 5'-0" LENGTH OF BEAM. ONLY (2) HOLES ARE ALLOWED IN THE MIDDLE 1/3 OF THE MEMBER.

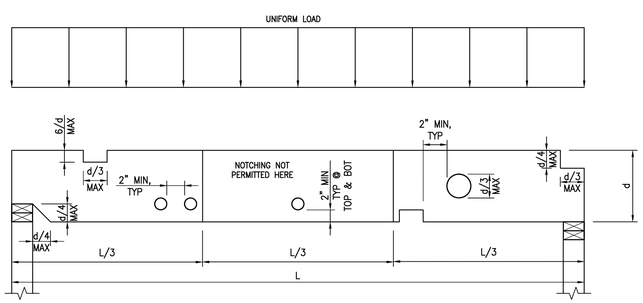

9 NOTCHING AND BORING GUIDE FOR SOLID SAWN BEAMS, JOISTS AND RAFTERS
SCALE: 3/4" = 1'-0"

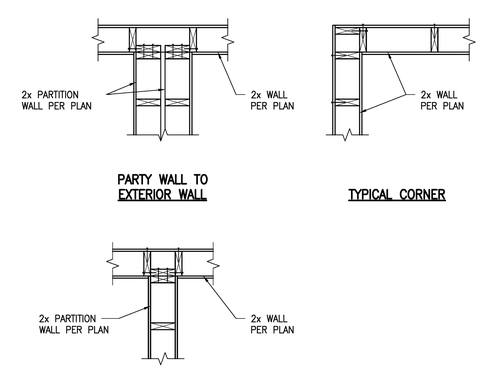

11 TYPICAL WALL INTERSECTION FRAMING
SCALE: 3/4" = 1'-0"

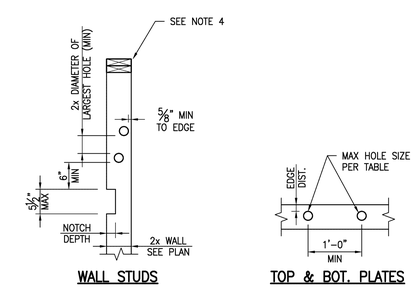

NOTES:

1. DO NOT BORE HOLES OR NOTCH STUDS MORE THAN INDICATED IN ABOVE TABLES AND SKETCH.
2. VERIFY ALL PLUMBING WALL LOCATIONS W/ ARCH'L DRAWINGS.
3. DO NOT OVERCUT NOTCHES.
4. PLACE AN ADDITIONAL STUD AT JOIST BEARING LOCATION ADJACENT TO HOLE IN TOP PLATE.
5. HOLES & NOTCHES SHALL NOT BE LOCATED WITHIN THE SAME CROSS SECTION OF STUD.
6. CONTACT ENGINEER OF RECORD FOR HOLES OR NOTCHES THAT DO NOT MEET THE REQUIREMENT ABOVE.

12 NOTCHING & BORING GUIDELINES @ PLUMBING WALL
SCALE: 3/4" = 1'-0"

CRAIG A. PENFIELD — STATE OF WASHINGTON — 42811 — REGISTERED PROFESSIONAL ENGINEER
06/21/16

REV	DATE	BY	REVISIONS

WCE
WHIPPLE CONSULTING ENGINEERS
2528 NORTH SULLIVAN ROAD
SPOKANE VALLEY, WA 99216
PH: 509-926-2617 FAX: 509-926-0227

CIVIL	STRUCTURAL	SURVEYING	TRAFFIC	PLANNING	LANDSCAPE	OTHER
	X					

LEGACY VILLAS
18 UNIT
LIBERTY LAKE, WA

DRAWN:	JDK
REVIEWED:	CAP
SCALE:	PER PLAN
PROJ #:	16-1624
DATE:	06/21/16

STRUCTURAL TYPICAL DETAILS
S1.4

P:\WCE_WORK\2016 WCE PROJECTS\2016-1624 Wyatt Arch - Copper Basin Library Lake Apt\DWG\STRUCTURAL\DRAWINGS\18-plex\2016-1624-S1X General Notes and Typical Details.dwg 6/21/2016 2:06:28 PM, jamie, DWG To PDF.pc3

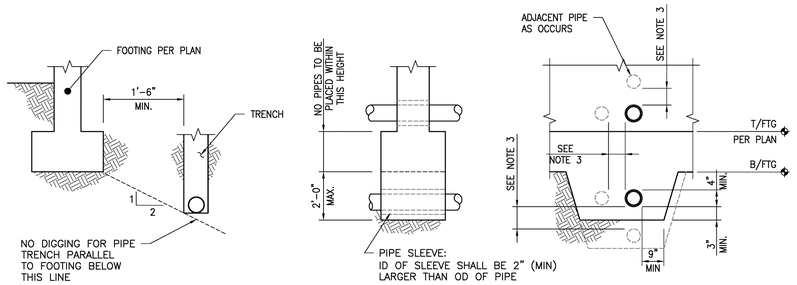

NOTES:

1. SEE NOTES ON FOUNDATION PLAN FOR ADDITIONAL REINFORCEMENT.
2. PIPE & CONDUIT MUST RUN PERP. THRU WALL.
3. VERT. & HORZ. CLEAR SPACE BETWEEN ADJACENT PIPE SLEEVES SHALL NOT BE LESS THAN THE DIAMETER OF THE LARGER SLEEVE.

1 TYPICAL PIPE OR CONDUIT PENETRATIONS AT FOUNDATION

SCALE: N.T.S.

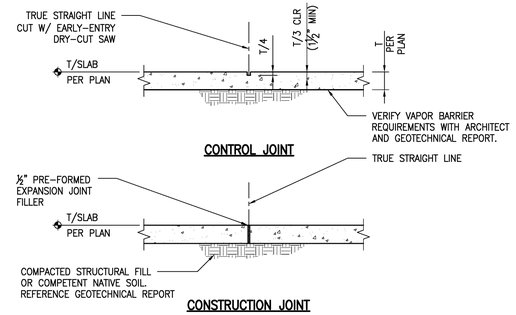

NOTES:

1. CONSTRUCTION/CONTROL JOINT LOCATIONS AT CONTRACTORS DISCRETION UNLESS NOTED OTHERWISE ON PLANS. MAXIMUM ENCLOSED SQUARE FOOTAGE AREA TO BE 144 SQUARE FEET, WITH MAXIMUM PANEL ASPECT RATIO OF 1.3 TO 1.0.
2. USE "EARLY ENTRY DRY-CUT SAW" AS SOON AS POSSIBLE WITHOUT CAUSING RAVELING OF CONCRETE EDGES. SAWCUT ALONG SHORT DIRECTION OF POUR FIRST

3 TYPICAL CONCRETE SLAB JOINT

SCALE: N.T.S.

BAR SIZE	f'c = 3000psi					
	DEVELOPMENT LENGTH			LAP SPLICE		
	TENSION		COMPRESSION	TENSION		COMPRESSION
	TOP BARS	OTHER BARS	ALL BARS	TOP BARS	OTHER BARS	ALL BARS
#3	22	17	9	28	22	12
#4	29	22	11	37	29	15
#5	36	28	14	47	36	19
#6	43	33	17	56	43	23
#7	63	48	20	81	63	27
#8	72	55	22	93	72	30

NOTES:

1. VALUES FOR UNCOATED REINFORCING AND NORMAL WEIGHT CONCRETE WITH CLEAR SPACING > db, CLEAR COVER > db AND MINIMUM STIRRUPS OR TIES THROUGHOUT Ld OR CLEAR SPACING > 2db AND CLEAR COVER > db.
2. DEVELOP ALL REINFORCING IN STRUCTURAL SLABS WITH MINIMUM DEVELOPMENT LENGTH Ld.
3. TOP BAR = HORIZONTAL BAR WITH MORE THAN 12" OF FRESH CONCRETE BELOW OR AS NOTED ON DOCUMENTS AS "TOP BAR".
4. UNLESS NOTED OTHERWISE, ALL LAPS SHALL BE MINIMUM CLASS B OR CLASS B (TOP BARS).
5. ALL TABULATED VALUES ARE IN INCHES.

4 TYPICAL LAP SPLICE AND DEVELOPMENT LENGTH SCHEDULE

SCALE: N.T.S.

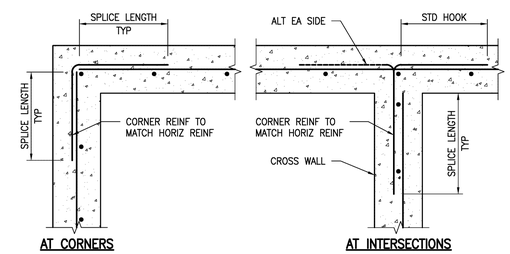

NOTES:

1. FOR SPLICE LENGTHS, REFERENCE LAP SPLICE AND DEVELOPMENT LENGTH SCHEDULE.
2. FOR WALL REINFORCING, REFERENCE PLAN.
3. AT FOOTING AND STEM WALLS, CORNER REINFORCING TO MATCH FOOTING AND STEM WALL HORIZONTAL REINFORCING.

7 TYPICAL CORNER REINF AT CONCRETE WALLS

SCALE: N.T.S.

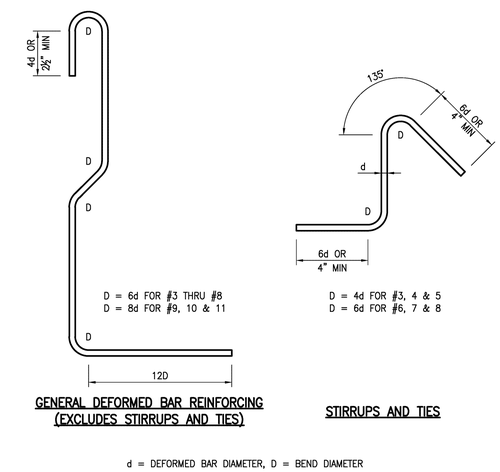

8 TYPICAL REBAR BENDING SCHEDULE

SCALE: N.T.S.

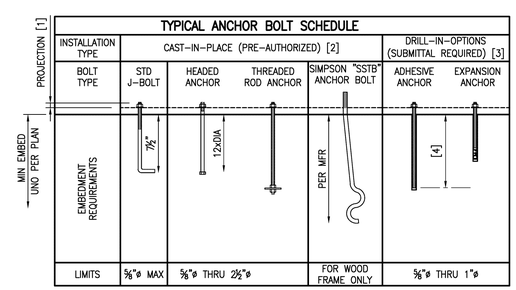

NOTES:

1. CONTRACTOR SHALL DETERMINE THE REQUIRED THREAD PROJECTION SUITABLE FOR THE THICKNESS OF THE MATERIAL BEING FASTENED PLUS GROUT ALLOWANCE, IF ANY, AND CONSTRUCTION TOLERANCES, UNO.
2. CONTRACTOR MAY SELECT APPROPRIATE CAST-IN-PLACE ANCHOR BOLT OPTION WITHOUT SUBMITTAL.
3. DRILL-IN OPTIONS ARE NOT APPROPRIATE AT ALL CONDITIONS. IF DRILL-IN METHOD IS PREFERRED, SUBMIT MANUFACTURER'S INFORMATION, ALLOWABLE LOAD VS. EMBEDMENT DATA AND LOCATIONS WHERE SUBSTITUTIONS ARE REQUESTED. ENGINEER WILL DETERMINE IF SUBSTITUTION IS APPROPRIATE FOR LOCATION AND LOADING.
4. EMBEDMENT OF DRILL-IN ANCHORS SHALL BE PER ENGINEER'S SUBMITTAL REVIEW COMMENTS. EMBEDMENT SHALL BE (9) NINE TIMES THE NOMINAL ANCHOR DIAMETER, UNO.
5. AT PRESSURE TREATED SILLS, PROVIDE HOT DIPPED GALVANIZED OR STAINLESS STEEL ANCHORS.

12 TYPICAL ANCHOR BOLT SCHEDULE

SCALE: N.T.S.

5 NOT USED

SCALE: ¾" = 1'-0"

6 NOT USED

SCALE: ¾" = 1'-0"

9 NOT USED

SCALE: ¾" = 1'-0"

10 NOT USED

SCALE: ¾" = 1'-0"

11 NOT USED

SCALE: ¾" = 1'-0"

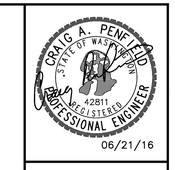

06/21/16

REV	DATE	BY	REVISIONS

WHIPPLE CONSULTING ENGINEERS
2328 NORTH SULLIVAN ROAD
SPOKANE VALLEY, WA 99216
PH: 509-926-2017 FAX: 509-926-0227

CIVIL
X STRUCTURAL
SURVEYING
TRAFFIC
PLANNING
LANDSCAPE
OTHER

LEGACY VILLAS
18 UNIT
LIBERTY LAKE, WA

DRAWN:	JDK
REVIEWED:	CAP
SCALE:	PER PLAN
PROJ #:	16-1624
DATE:	06/21/16

STRUCTURAL TYPICAL DETAILS

S1.5

P:\WCE_WORK\2016 WCE PROJECTS\2016-1624 Wyatt Arch - Copper Basin Liberty Lake Apt\DWG\STRUCTURAL\DRAWING\S1.8.pln\2016-1624 S1.5 General Notes and Typical Details.dwg 6/21/2016 2:06:28 PM, jarrod, DWG To PDF.pc3

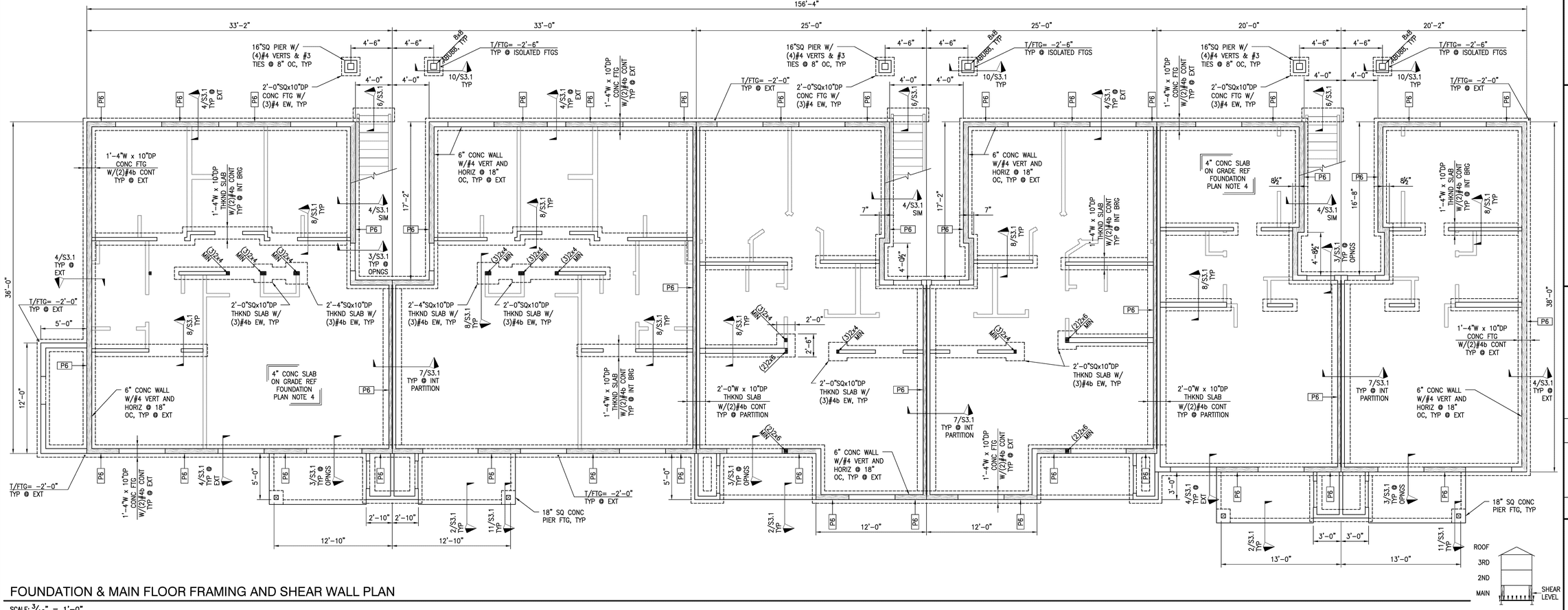

FOUNDATION & MAIN FLOOR FRAMING AND SHEAR WALL PLAN

SCALE: 3/16" = 1'-0"

SHEAR WALL FRAMING NOTES:

1. REFERENCE S1.1 AND S1.2 FOR STRUCTURAL GENERAL NOTES AND OTHER STRUCTURAL DESIGN CRITERIA NOT SHOWN ON THIS SHEET. REFERENCE S1.3, S1.4 AND S1.5 FOR TYPICAL CONSTRUCTION DETAILS.
2. ALL DIMENSIONS AND ELEVATIONS SHALL BE COORDINATED WITH THE ARCHITECTS DRAWINGS PRIOR TO CONSTRUCTION. REFERENCE MECHANICAL, PLUMBING, ELECTRICAL AND SPRINKLER DRAWINGS FOR ALL DUCTS, CHASES AND PIPES.
3. SHEAR WALLS SHOWN ON THIS PLAN ARE BETWEEN THE FRAMING PLANS ABOVE AND BELOW. REFERENCE THE FRAMING PLAN BELOW FOR BEARING WALL AND BEAM AND JOIST FRAMING REQUIREMENTS.
4. POSTS AND BUNDLED STUDS CALLED OUT ON THIS PLAN SUPPORT THE FRAMING ABOVE. REFERENCE THE FRAMING PLAN BELOW FOR POSTS AND BUNDLED STUDS NOT CALLED OUT ON THIS PLAN.
5. FOR SHEAR WALL AND NAILING REQUIREMENTS, REFERENCE SHEAR WALL SCHEDULE, S1.3. ALL EXTERIOR WALLS TO BE SHEAR WALL TYPE P6 UNO. FOR TYPICAL SHEAR WALL ELEVATION, REFERENCE S1.3.
6. HD INDICATES HOLD-DOWN. REFERENCE HOLD-DOWN SCHEDULE, S1.3. HOLD-DOWNS REQUIRED AT LOCATIONS SHOWN, NOT ALL SHEAR WALLS REQUIRE HOLD-DOWNS. REFERENCE S1.3 FOR TYPICAL HOLD-DOWN ELEVATIONS.

FOUNDATION PLAN NOTES:

1. REFERENCE S1.1 AND S1.2 FOR STRUCTURAL GENERAL NOTES AND OTHER STRUCTURAL DESIGN CRITERIA NOT SHOWN ON THIS SHEET. REFERENCE S1.3, S1.4 AND S1.5 FOR TYPICAL CONSTRUCTION DETAILS.
2. VERIFY ALL NEW AND EXISTING DIMENSIONS WITH THE ARCHITECTURAL DRAWINGS. ALL DOOR OPENINGS IN FOUNDATION WALLS, DRAINS AND SLOPES, BLOCKOUTS FOR PLUMBING, SPRINKLERS AND HVAC SHALL BE LOCATED AND COORDINATED BY THE CONTRACTOR PRIOR TO POURING CONCRETE.
3. ALL FOOTINGS AND SLABS TO BEAR ON COMPETENT NATIVE SOIL AND/OR STRUCTURAL FILL PER GEOTECHNICAL REPORT. PROVIDE FREE-DRAINING GRANULAR FILL UNDER SLABS PER GEOTECHNICAL REPORT AND/OR ARCHITECTURAL PLANS.
4. TOP OF SLAB ELEVATION ASSUMED TO BE 0'-0". COORDINATE FINISHED FLOOR ELEVATION WITH ARCHITECT/CIVIL ENGINEER.
5. BOTTOM OF ALL EXT FOOTINGS SHALL BEAR A MINIMUM OF 2'-0" BELOW LOWEST ADJACENT FINISHED GRADE. BOTTOM OF FOOTING (B FTG) IS ASSUMED TO BE -2'-10" BELOW TOP OF SLAB. COORDINATE B FTG ELEVATION WITH ARCHITECT/CIVIL ENGINEER WHERE BUILDING STEPS OCCUR.
6. CJ INDICATES CONTROL JOINT. FOR INFORMATION, REFERENCE S1.5.
7. MOISTURE PROOF ALL CONCRETE STEM WALLS PER ARCHITECT.
8. SILL PLATE TO BE 2x PRESSURE TREATED, UNO. SILL PLATE ANCHOR BOLTS AT STEM WALLS SHALL BE ½"øx10" W/ MIN 7" EMBED SPACED 6'-0" OC UNO. ANCHOR BOLTS AT INTERIOR BEARING AND SHEAR WALLS AT THICKENED SLABS SHALL BE SIMPSON TITEN HD ½"øx6" SPACED MAX 4'-0" OC OR PER SHEAR WALL SCHEDULE S1.3. STAGGER SPACING AT PARTITION WALLS.

STUD WALL SCHEDULE

EXTERIOR:	2X6 @ 16" OC
INTERIOR BEARING:	2X4 @ 16" OC
INTERIOR NON-BEARING:	2X4 @ 16" OC
DOUBLE PARTITION:	2X4 @ 16" OC (EA SIDE)

FOR STUD GRADE REFER TO STRUCTURAL GENERAL NOTES S1.1 AND S1.2. REFER TO ARCHITECTURAL PLANS FOR DIMENSIONS OF PLUMBING WALLS (MIN 2X6 @ 16" OC)

TYPICAL DETAILS

1/S1.5	TYPICAL PIPE OR CONDUIT PENETRATIONS AT FOUNDATION
3/S1.5	TYPICAL CONCRETE SLAB JOINT
4/S1.5	TYPICAL LAP, SPLICE AND DEVELOPMENT LENGTH SCHEDULE
7/S1.5	TYPICAL CORNER REINFORCEMENT AT CONCRETE WALLS
8/S1.5	TYPICAL REBAR BENDING SCHEDULE
12/S1.5	TYPICAL ANCHOR BOLT SCHEDULE

CRAIG A. PENFIELD — STATE OF WASHINGTON — 42811 — REGISTERED PROFESSIONAL ENGINEER
06/21/16

REV	DATE	BY	REVISIONS

WCE
WHIPPLE CONSULTING ENGINEERS
2528 NORTH SULLIVAN ROAD
SPOKANE VALLEY, WA 99216
PH: 509-926-2017 / FAX: 509-926-0227

CIVIL | X STRUCTURAL | SURVEYING | TRAFFIC | PLANNING | LANDSCAPE | OTHER

LEGACY VILLAS
18 UNIT
LIBERTY LAKE, WA

DRAWN:	JDK
REVIEWED:	CAP
SCALE:	PER PLAN
PROJ #:	16-1624
DATE:	06/21/16

S2.1

P:\WCE_WORK\2016-WCE PROJECTS\2016-1624 Wyatt Arch - Copper Basin Liberty Lake Apt\DWG\STRUCTURAL\DRAWINGS\18-plex\2013-1117-S2.1 BLDG 1 - UPDATE 4-17-14.dwg 6/21/2016 3:06:45 PM, jamesb, DWG To PDF.pc3

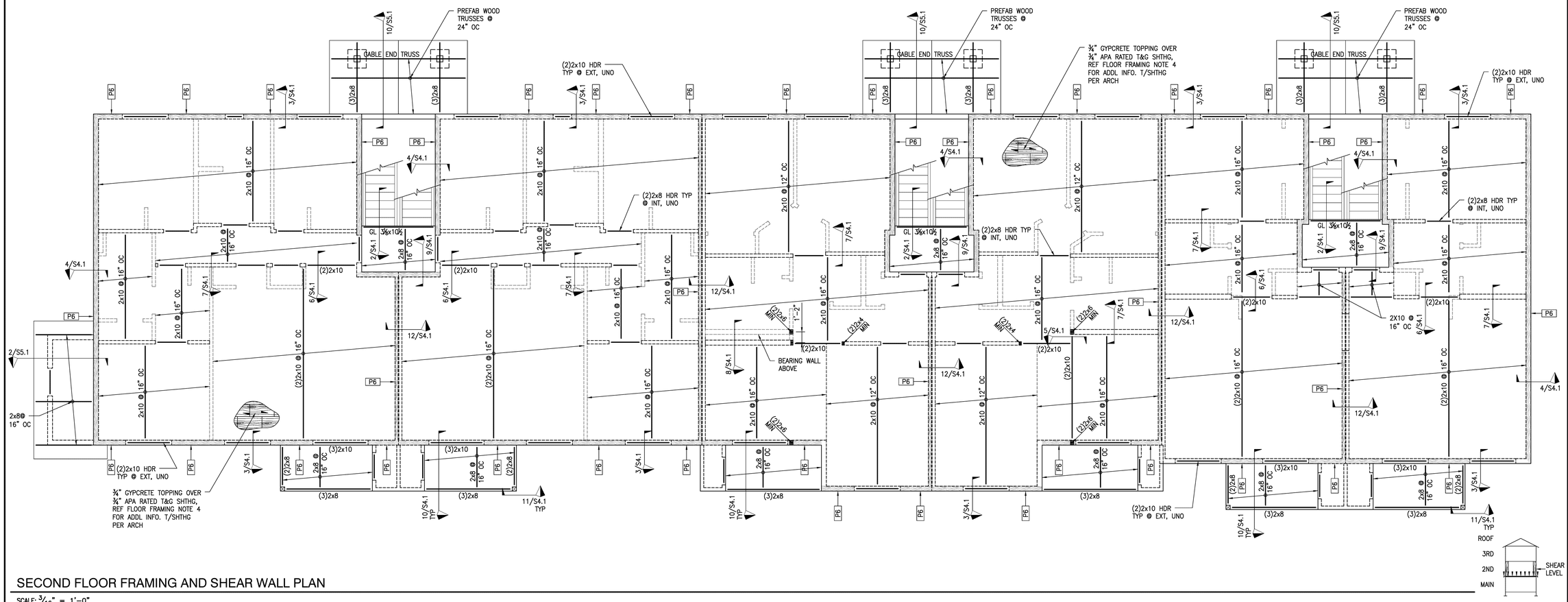

SECOND FLOOR FRAMING AND SHEAR WALL PLAN

SCALE: 3/16" = 1'-0"

SHEAR WALL FRAMING NOTES:

1. REFERENCE S1.1 AND S1.2 FOR STRUCTURAL GENERAL NOTES AND OTHER STRUCTURAL DESIGN CRITERIA NOT SHOWN ON THIS SHEET. REFERENCE S1.3, S1.4 AND S1.5 FOR TYPICAL CONSTRUCTION DETAILS.
2. ALL DIMENSIONS AND ELEVATIONS SHALL BE COORDINATED WITH THE ARCHITECTS DRAWINGS PRIOR TO CONSTRUCTION. REFERENCE MECHANICAL, PLUMBING, ELECTRICAL AND SPRINKLER DRAWINGS FOR ALL DUCTS, CHASES AND PIPES.
3. SHEAR WALLS SHOWN ON THIS PLAN ARE BETWEEN THE FRAMING PLANS ABOVE AND BELOW. REFERENCE THE FRAMING PLAN BELOW FOR BEARING WALL AND BEAM AND JOIST FRAMING REQUIREMENTS.
4. POSTS AND BUNDLED STUDS CALLED OUT ON THIS PLAN SUPPORT THE FRAMING ABOVE. REFERENCE THE FRAMING PLAN BELOW FOR POSTS AND BUNDLED STUDS NOT CALLED OUT ON THIS PLAN.
5. FOR SHEAR WALL AND NAILING REQUIREMENTS, REFERENCE SHEAR WALL SCHEDULE, S1.3. ALL EXTERIOR WALLS TO BE SHEAR WALL TYPE P6 UNO. FOR TYPICAL SHEAR WALL ELEVATION, REFERENCE S1.3.
6. HD INDICATES HOLD-DOWN. REFERENCE HOLD-DOWN SCHEDULE, S1.3. HOLD-DOWNS REQUIRED AT LOCATIONS SHOWN, NOT ALL SHEAR WALLS REQUIRE HOLD-DOWNS. REFERENCE S1.3 FOR TYPICAL HOLD-DOWN ELEVATIONS.

FLOOR FRAMING NOTES:

1. REFERENCE S1.1 AND S1.2 FOR STRUCTURAL GENERAL NOTES AND OTHER STRUCTURAL DESIGN CRITERIA NOT SHOWN ON THIS SHEET. REFERENCE S1.3, S1.4 AND S1.5 FOR TYPICAL CONSTRUCTION DETAILS.
2. ALL DIMENSIONS AND ELEVATIONS SHALL BE COORDINATED WITH THE ARCHITECTS DRAWINGS PRIOR TO CONSTRUCTION. REFERENCE MECHANICAL, PLUMBING, ELECTRICAL AND SPRINKLER DRAWINGS FOR ALL DUCTS, CHASES AND PIPES.
3. REFERENCE THE FRAMING PLAN BELOW FOR BEARING AND SHEAR WALLS, POSTS AND BUNDLED STUDS, AND CONNECTION HARDWARE.
4. APA RATED T&G FLOOR SHEATHING THICKNESS PER PLAN. REFERENCE THE STRUCTURAL GENERAL NOTES FOR SHEATHING REQUIREMENTS AND SPAN RATINGS. SHEATHING SHALL BE GLUED & NAILED TO FRAMING WITH 0.131"ø x3" NAILS AT 6"OC AT PANEL EDGES AND @ 12"OC FIELD, UNO.
5. JOIST AND BEAM HANGERS SHALL BE PER DETAIL OR SPECIFICALLY CALLED OUT ON PLAN WHERE REQUIRED.
6. PROVIDE FULL HEIGHT SOLID BLOCKING OR DOUBLE JOISTS UNDER ALL SHEAR WALLS AND BEARING WALLS. AT SHEAR WALLS PARALLEL TO FRAMING, ALIGN (1) JOIST OVER SHEAR WALL (ADDITIONAL JOISTS MAY BE REQUIRED). REFERENCE SHEAR WALL PLAN ABOVE FOR SHEAR WALL LOCATIONS.
7. BEAMS ARE FLUSH FRAMED WITH JOISTS UNO ON DETAILS OR ON PLANS AS "DB" INDICATING THAT A DROPPED BEAM IS REQUIRED. FOR BEAM SUPPORTS REFERENCE THE STUD AND SHEAR WALL PLAN BELOW.
8. BUNDLED STUDS AND TRIMMERS TO BE CONTINUOUS TO THE FOUNDATION OR SUPPORTING BEAM BELOW.

STUD WALL SCHEDULE

EXTERIOR:	2X6 @ 16" OC
INTERIOR BEARING:	2X4 @ 16" OC
INTERIOR NON-BEARING:	2X4 @ 16" OC
DOUBLE PARTITION:	2X4 @ 16" OC (EA SIDE)

FOR STUD GRADE REFER TO STRUCTURAL GENERAL NOTES S1.1 AND S1.2.
REFER TO ARCHITECTURAL PLANS FOR DIMENSIONS OF PLUMBING WALLS (MIN 2X6 @ 16" OC)

TYPICAL DETAILS

1/S4.1	TYPICAL FRAMING AT FLOOR/ROOF OPENINGS
1/S1.4	TYPICAL FLUSH BEAM FRAMING PARALLEL TO JOISTS
2/S1.4	TYPICAL FLUSH HEADER FRAMING
3/S1.4	TYPICAL HEADER FRAMING AT STRUCTURAL WALL
4/S1.4	TYPICAL SILL PLATE BOLTING
5/S1.4	PENETRATIONS IN GLU-LAM BEAMS
7/S1.4	TYPICAL SPLICE OF DOUBLE TOP PLATE
9/S1.4	NOTCHING AND BORING GUIDE FOR SOLID SAWN BEAMS, JOISTS AND RAFTERS
11/S1.4	TYPICAL WALL INTERSECTION FRAMING
12/S1.4	NOTCHING AND BORING GUIDELINES AT PLUMBING WALL

CRAIG A. PENFIELD
STATE OF WASHINGTON
42811
REGISTERED PROFESSIONAL ENGINEER
06/21/16

REV	DATE	BY	REVISIONS

WCE
WHIPPLE CONSULTING ENGINEERS
2529 NORTH SULLIVAN ROAD
SPOKANE VALLEY, WA 99216
PH: 509-926-2617 FAX: 509-926-0227

CIVIL
X STRUCTURAL
SURVEYING
TRAFFIC
PLANNING
LANDSCAPE
OTHER

LEGACY VILLAS
18 UNIT
LIBERTY LAKE, WA

DRAWN:	JDK
REVIEWED:	CAP
SCALE:	PER PLAN
PROJ #:	16-1624
DATE:	06/21/16

S2.2

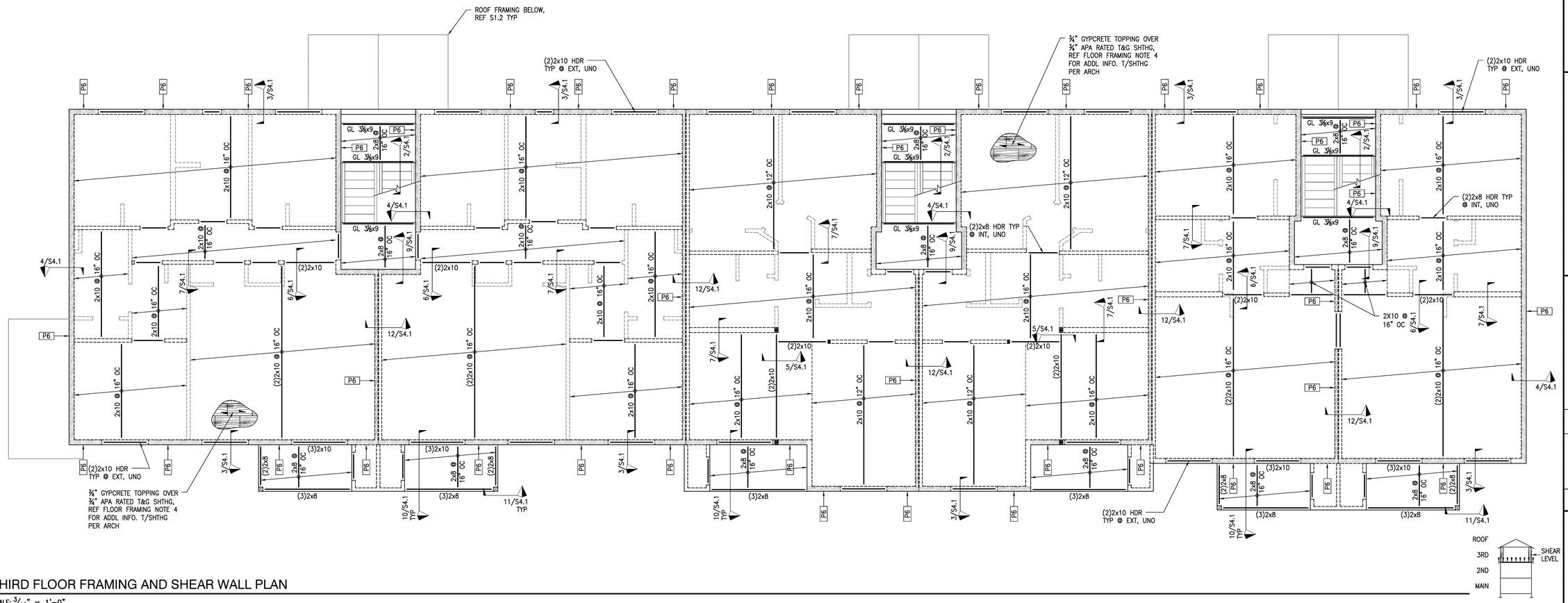

THIRD FLOOR FRAMING AND SHEAR WALL PLAN

SCALE: 3/16" = 1'-0"

SHEAR WALL FRAMING NOTES:

1. REFERENCE S1.1 AND S1.2 FOR STRUCTURAL GENERAL NOTES AND OTHER STRUCTURAL DESIGN CRITERIA NOT SHOWN ON THIS SHEET. REFERENCE S1.3, S1.4 AND S1.5 FOR TYPICAL CONSTRUCTION DETAILS.
2. ALL DIMENSIONS AND ELEVATIONS SHALL BE COORDINATED WITH THE ARCHITECTS DRAWINGS PRIOR TO CONSTRUCTION. REFERENCE MECHANICAL, PLUMBING, ELECTRICAL AND SPRINKLER DRAWINGS FOR ALL DUCTS, CHASES AND PIPES.
3. SHEAR WALLS SHOWN ON THIS PLAN ARE BETWEEN THE FRAMING PLANS ABOVE AND BELOW. REFERENCE THE FRAMING PLAN BELOW FOR BEARING WALL AND BEAM AND JOIST FRAMING REQUIREMENTS.
4. POSTS AND BUNDLED STUDS CALLED OUT ON THIS PLAN SUPPORT THE FRAMING ABOVE. REFERENCE THE FRAMING PLAN BELOW FOR POSTS AND BUNDLED STUDS NOT CALLED OUT ON THIS PLAN.
5. FOR SHEAR WALL AND NAILING REQUIREMENTS, REFERENCE SHEAR WALL SCHEDULE, S1.3. ALL EXTERIOR WALLS TO BE SHEAR WALL TYPE P6 UNO. FOR TYPICAL SHEAR WALL ELEVATION, REFERENCE S1.3.
6. HD INDICATES HOLD-DOWN. REFERENCE HOLD-DOWN SCHEDULE, S1.3. HOLD-DOWNS REQUIRED AT LOCATIONS SHOWN, NOT ALL SHEAR WALLS REQUIRE HOLD-DOWNS. REFERENCE S1.3 FOR TYPICAL HOLD-DOWN ELEVATIONS.

FLOOR FRAMING NOTES:

1. REFERENCE S1.1 AND S1.2 FOR STRUCTURAL GENERAL NOTES AND OTHER STRUCTURAL DESIGN CRITERIA NOT SHOWN ON THIS SHEET. REFERENCE S1.3, S1.4 AND S1.5 FOR TYPICAL CONSTRUCTION DETAILS.
2. ALL DIMENSIONS AND ELEVATIONS SHALL BE COORDINATED WITH THE ARCHITECTS DRAWINGS PRIOR TO CONSTRUCTION. REFERENCE MECHANICAL, PLUMBING, ELECTRICAL AND SPRINKLER DRAWINGS FOR ALL DUCTS, CHASES AND PIPES.
3. REFERENCE THE FRAMING PLAN BELOW FOR BEARING AND SHEAR WALLS, POSTS AND BUNDLED STUDS, AND CONNECTION HARDWARE.
4. APA RATED T&G FLOOR SHEATHING THICKNESS PER PLAN. REFERENCE THE STRUCTURAL GENERAL NOTES FOR SHEATHING REQUIREMENTS AND SPAN RATINGS. SHEATHING SHALL BE GLUED & NAILED TO FRAMING WITH 0.131"ø x3" NAILS AT 6"OC AT PANEL EDGES AND @ 12"OC FIELD, UNO.
5. JOIST AND BEAM HANGERS SHALL BE PER DETAIL OR SPECIFICALLY CALLED OUT ON PLAN WHERE REQUIRED.
6. PROVIDE FULL HEIGHT SOLID BLOCKING OR DOUBLE JOISTS UNDER ALL SHEAR WALLS AND BEARING WALLS. AT SHEAR WALLS PARALLEL TO FRAMING, ALIGN (1) JOIST OVER SHEAR WALL (ADDITIONAL JOISTS MAY BE REQUIRED). REFERENCE SHEAR WALL PLAN ABOVE FOR SHEAR WALL LOCATIONS.
7. BEAMS ARE FLUSH FRAMED WITH JOISTS UNO ON DETAILS OR ON PLANS AS "DB" INDICATING THAT A DROPPED BEAM IS REQUIRED. FOR BEAM SUPPORTS REFERENCE THE STUD AND SHEAR WALL PLAN BELOW.
8. BUNDLED STUDS AND TRIMMERS TO BE CONTINUOUS TO THE FOUNDATION OR SUPPORTING BEAM BELOW.

STUD WALL SCHEDULE

EXTERIOR:	2X6 @ 16" OC
INTERIOR BEARING:	2X4 @ 16" OC
INTERIOR NON-BEARING:	2X4 @ 16" OC
DOUBLE PARTITION:	2X4 @ 16" OC (EA SIDE)

FOR STUD GRADE REFER TO STRUCTURAL GENERAL NOTES S1.1 AND S1.2.
REFER TO ARCHITECTURAL PLANS FOR DIMENSIONS OF PLUMBING WALLS (MIN 2X6 @ 16" OC)

TYPICAL DETAILS

1/S4.1	TYPICAL FRAMING AT FLOOR/ROOF OPENINGS
1/S1.4	TYPICAL FLUSH BEAM FRAMING PARALLEL TO JOISTS
2/S1.4	TYPICAL FLUSH HEADER FRAMING
3/S1.4	TYPICAL HEADER FRAMING AT STRUCTURAL WALL
4/S1.4	TYPICAL SILL PLATE BOLTING
5/S1.4	PENETRATIONS IN GLU-LAM BEAMS
7/S1.4	TYPICAL SPLICE OF DOUBLE TOP PLATE
9/S1.4	NOTCHING AND BORING GUIDE FOR SOLID SAWN BEAMS, JOISTS AND RAFTERS
11/S1.4	TYPICAL WALL INTERSECTION FRAMING
12/S1.4	NOTCHING AND BORING GUIDELINES AT PLUMBING WALL

CRAIG A. PENFIELD — STATE OF WASHINGTON — 42811 — REGISTERED PROFESSIONAL ENGINEER
06/21/16

REV	DATE	BY	REVISIONS

WCE
WHIPPLE CONSULTING ENGINEERS
2528 NORTH SULLIVAN ROAD
SPOKANE VALLEY, WA 99216
PH: 509-926-2017 FAX: 509-926-0227

- CIVIL
- X STRUCTURAL
- SURVEYING
- TRAFFIC
- PLANNING
- LANDSCAPE
- OTHER

LEGACY VILLAS
18 UNIT
LIBERTY LAKE, WA

DRAWN:	JDK
REVIEWED:	CAP
SCALE:	PER PLAN
PROJ #:	16-1624
DATE:	06/21/16

S2.3

P:\WCE_WORK\2016 WCE PROJECTS\2016-1624 Wyatt Arch - Copper Basin Liberty Lake Apt\DWG\STRUCTURAL\DRAWINGS\18 plex\2013-1317-S2.3 BLDG 1 - UPDATE 4-17-16.dwg, 6/21/2016 2:26:50 PM, jamie, DWG To PDF.pc3

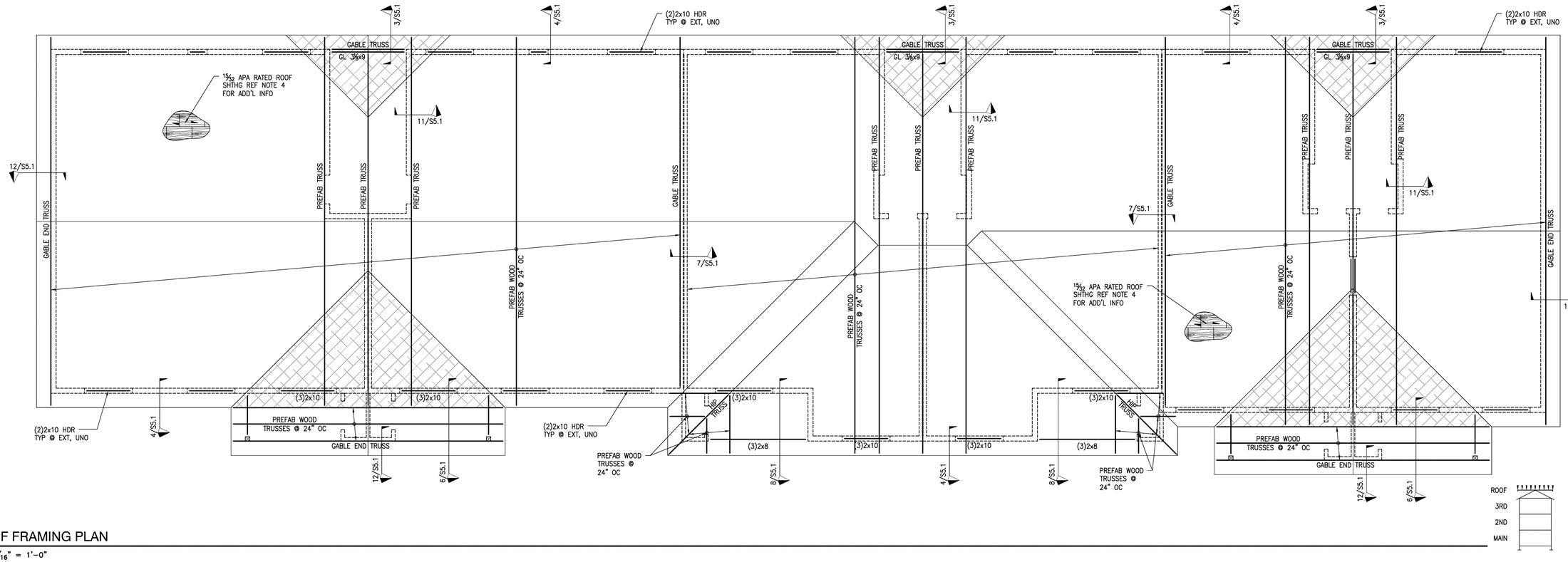

ROOF FRAMING PLAN

SCALE: 3/16" = 1'-0"

ROOF FRAMING NOTES:

1. REFERENCE S1.1 AND S1.2 FOR STRUCTURAL GENERAL NOTES AND OTHER STRUCTURAL DESIGN CRITERIA NOT SHOWN ON THIS SHEET. REFERENCE S1.3, S1.4 AND S1.5 FOR TYPICAL CONSTRUCTION DETAILS.
2. ALL DIMENSIONS AND ELEVATIONS SHALL BE COORDINATED WITH THE ARCHITECTS DRAWINGS PRIOR TO CONSTRUCTION. REFERENCE MECHANICAL, PLUMBING, ELECTRICAL AND SPRINKLER DRAWINGS FOR ALL DUCTS, CHASES AND PIPES.
3. REFERENCE THE FRAMING PLAN BELOW FOR BEARING AND SHEAR WALLS, POSTS AND BUNDLED STUDS, AND CONNECTION HARDWARE.
4. APA RATED ROOF SHEATHING THICKNESS PER PLAN. REFERENCE THE STRUCTURAL GENERAL NOTES FOR SHEATHING REQUIREMENTS AND SPAN RATINGS. SHEATHING TO BE NAILED TO ROOF FRAMING WITH 0.131"ø x3" NAILS @ 6"OC AT PANEL EDGES AND @ 12"OC FIELD, UNO.
5. THE DESIGN AND ENGEERING OF ROOF TRUSSES AND SPACINGS ARE PER THE TRUSS MANUFACTURER. REFERENCE THE STRUCTURAL GENERAL NOTES FOR DESIGN LOADS AND SUBMITTAL REQUIREMENTS. ROOF TRUSSES SHOWN ARE A SUGGESTED LAYOUT.
6. CROSS-HATCHED REGION SHOWS APPROXIMATE ARES OF OVER-FRAMING. TRUSSES SUPPORTING OVER-FRAMING SHALL BE DESIGNED TO CARRY LOADS FROM THE OVER-FRAMING IN ADDITION TO THE DESIGN LOADS SPECIFIED IN THE STRUCTURAL GENERAL NOTES. THE OVER-FRAMING DESIGN IS THE RESPONSIBILITY OF THE TRUSS MANUFACTURER.
7. ALL GIRDER TRUSSES SHALL BE SUPPORTED BY A MINIMUM OF THREE STUDS OR BEAR DIRECTLY ON SUPPORTING BEAM. TRUSS MANUFACTURER SHALL SUBMIT GIRDER TRUSSES REACTIONS TO THE ENGINEER OF RECORD. ALL MULTIPLE STUDS SUPPORTING HIP MASTER AND GIRDER TRUSSES TO CONTINUE TO FOUNDATION.
8. PROVIDE SIMPSON H2.5T HURRICANE TIES AT ALL ROOF TRUSSES TYPICAL. TRUSS HANGERS SHALL BE SUPPLIED AND DESIGNED BY THE TRUSS SUPPLIER.

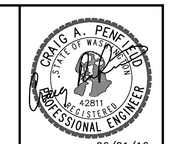

REV	DATE	BY	REVISIONS

WCE
WHIPPLE CONSULTING ENGINEERS
2529 NORTH SULLIVAN ROAD
SPOKANE VALLEY, WA 99216
PH: 509-926-2017 FAX: 509-926-0227

CIVIL	
X STRUCTURAL	
SURVEYING	
TRAFFIC	
PLANNING	
LANDSCAPE	
OTHER	

LEGACY VILLAS
18 UNIT
LIBERTY LAKE, WA

DRAWN:	JDK
REVIEWED:	CAP
SCALE:	PER PLAN
PROJ #:	16-1624
DATE:	06/21/16

S2.4

P:\WCE_WORK\2016 WCE PROJECTS\2016-1624 Wyatt Arch - Copper Basin Liberty Lake Apt\DWG\STRUCTURAL\GRAWING\S1B.pln\v2013.1157 S2.1 BLDG 1 - UPDATE 4-17-16.dwg, 6/21/2016 7:06:44 PM, jamie, DWG To PDF.pc3

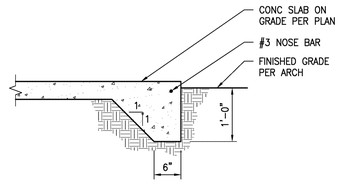

1 NOT USED
SCALE: 3/4" = 1'-0"

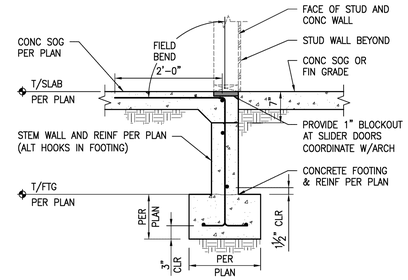

NOTE:
COORDINATE ALIGNMENT OF SHTHG & STEM WALL.

2 SLAB EDGE AT PATIO
SCALE: 3/4" = 1'-0"

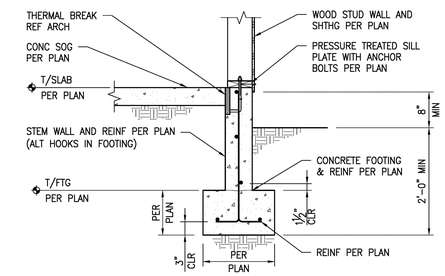

NOTES:
1. COORDINATE ALIGNMENT OF SHTHG & STEM WALL.
2. EXTERIOR SLAB ON GRADE AT SIM.

3 SLAB OVER-POUR AT OPENINGS
SCALE: 3/4" = 1'-0"

4 WOOD STUD WALL AT EXTERIOR FOOTING
SCALE: 3/4" = 1'-0"

5 NOT USED
SCALE: 3/4" = 1'-0"

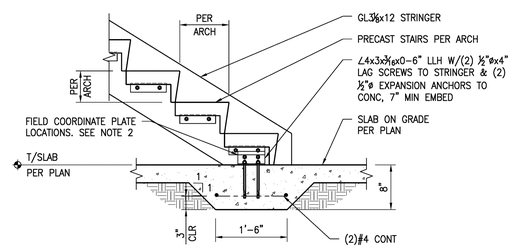

NOTES:
1. COLD JOINT BETWEEN FOOTING AND SLAB NOT PERMITTED.
2. ANCHOR PLATE MAY NEED TO BE RECESSED IN STRINGER.

6 THICKENED SLAB SUPPORT AT STAIRS
SCALE: 3/4" = 1'-0"

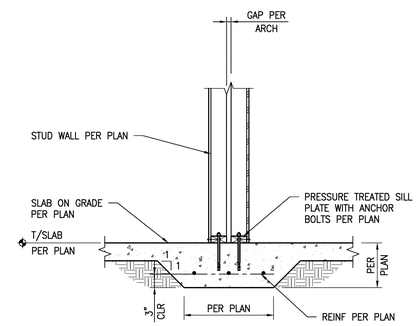

NOTES:
1. COLD JOINT BETWEEN FOOTING AND SLAB NOT PERMITTED.
2. ALTERNATIVE AB: USE TITEN HD W/ SAME SIZE AND SPACING.

7 THICKENED SLAB AT INTERIOR PARTITION WALL
SCALE: 3/4" = 1'-0"

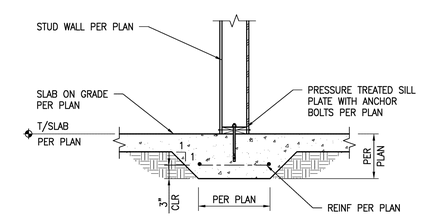

NOTE:
COLD JOINT BETWEEN FOOTING AND SLAB NOT PERMITTED

8 THICKENED SLAB AT INTERIOR STRUCTURAL WALL
SCALE: 3/4" = 1'-0"

9 NOT USED
SCALE: 3/4" = 1'-0"

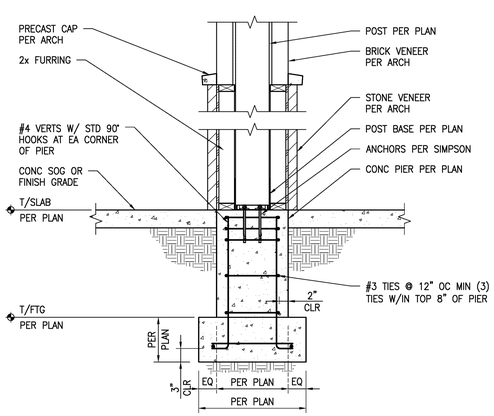

10 LOW ROOF SUPPORT PIERS
SCALE: 3/4" = 1'-0"

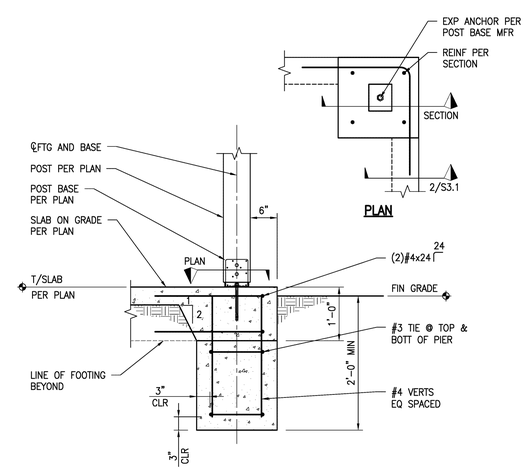

11 DECK POST AND FOOTING
SCALE: 3/4" = 1'-0"

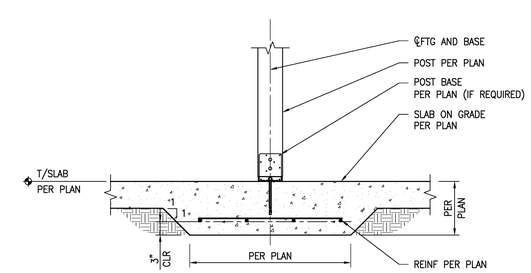

NOTE:
COLD JOINT BETWEEN FOOTING AND SLAB NOT PERMITTED

12 THICKENED SLAB FOOTING AT WOOD POST
SCALE: 3/4" = 1'-0"

CRAIG A. PENFIELD
STATE OF WASHINGTON
42811
REGISTERED
PROFESSIONAL ENGINEER
06/21/16

REV	DATE	BY	REVISIONS

WHIPPLE CONSULTING ENGINEERS
2528 NORTH SULLIVAN ROAD
SPOKANE VALLEY, WA 99216
PH: 509-926-2017 / FAX: 509-926-0227

CIVIL	
X	STRUCTURAL
	SURVEYING
	TRAFFIC
	PLANNING
	LANDSCAPE
	OTHER

LEGACY VILLAS
18 UNIT
LIBERTY LAKE, WA

DRAWN:	JDK
REVIEWED:	CAP
SCALE:	PER PLAN
PROJ #:	16-1624
DATE:	06/21/16

S3.1

P:\WCE_WORK\2016 WCE PROJECTS\2016-1624 Wyatt Arch - Copper Basin Liberty Lake Apt\DWG\STRUCTURAL\DRAWING\S1.8.dwg 6/21/2016 10:07:07 PM, jamie, DWG To PDF.pc3

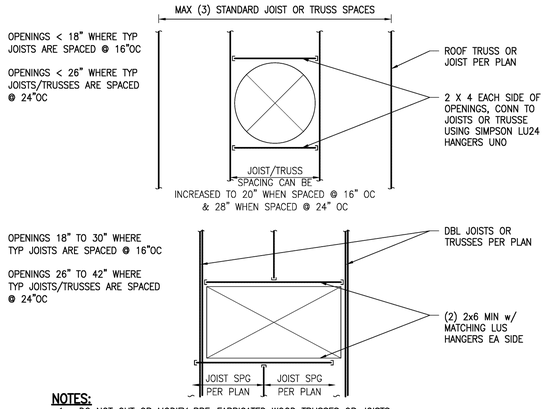

NOTES:

1. DO NOT CUT OR MODIFY PRE-FABRICATED WOOD TRUSSES OR JOISTS.
2. THESE OPENING DETAILS APPLY ONLY PENETRATIONS, IF MECHANICAL EQUIPMENT IS TO BE SUPPORTED BY ROOF, CONTACT ENGINEER OF RECORD.

1 TYPICAL FRAMING AT FLOOR/ROOF OPENINGS

SCALE: NTS

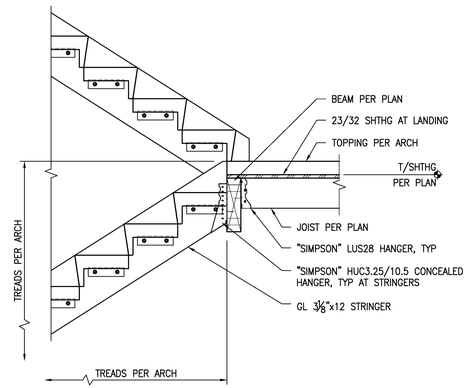

2 TYPICAL INTERIOR PRECAST STAIRWAY ELEVATION

SCALE: 3/4" = 1'-0"

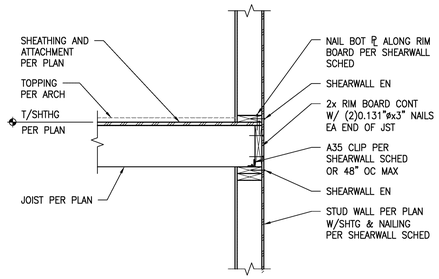

3 FLOOR JOISTS PERPENDICULAR TO EXTERIOR WALL

SCALE: 3/4" = 1'-0"

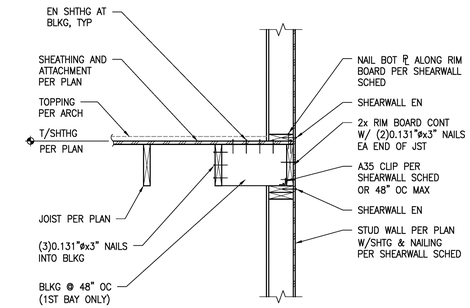

4 FLOOR JOISTS PARALLEL TO EXTERIOR WALL

SCALE: 3/4" = 1'-0"

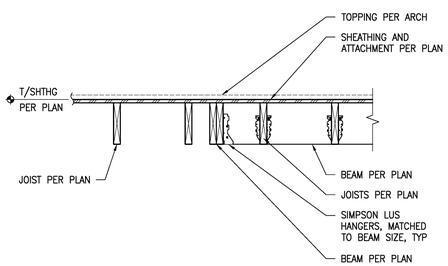

5 BEAM TO BEAM CONNECTION

SCALE: 3/4" = 1'-0"

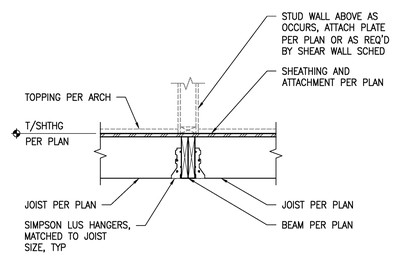

6 JOISTS TO BEAM - FLUSH WITH FRAMING

SCALE: 3/4" = 1'-0"

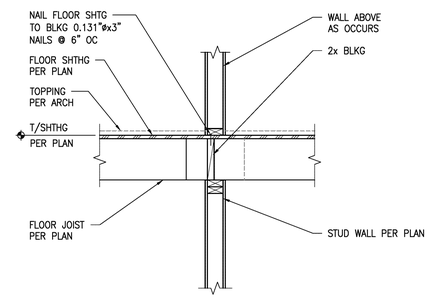

7 FLOOR FRAMING OVER INTERIOR BEARING WALL FLOOR JOISTS PERPENDICULAR

SCALE: 3/4" = 1'-0"

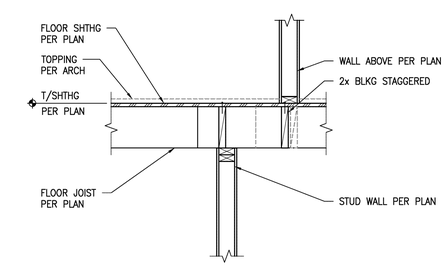

NOTE:
SEE 7/S4.1 FOR BALLANCE OF INFORMATION

8 FLOOR FRAMING OVER INTERIOR BEARING WALL WITH OFFSET WALL ABOVE

SCALE: 3/4" = 1'-0"

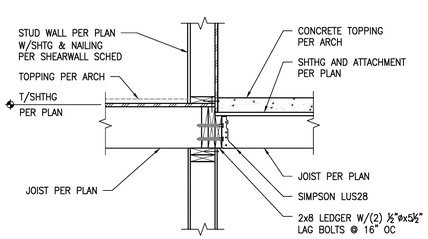

9 FLOOR AT STAIR LANDING

SCALE: 3/4" = 1'-0"

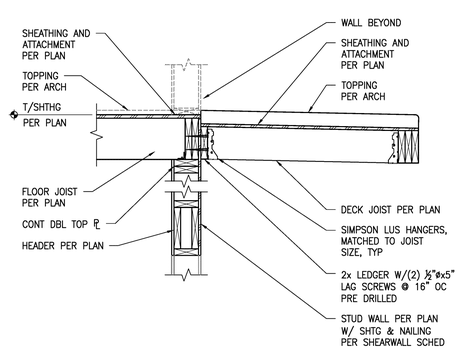

10 DECK JOISTS WITH FLOOR FRAMING PERPENDICULAR TO EXTERIOR WALL

SCALE: 3/4" = 1'-0"

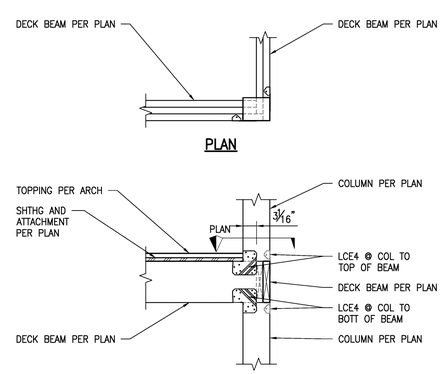

11 WOOD BEAM CONNECTION TO WOOD POST

SCALE: 3/4" = 1'-0"

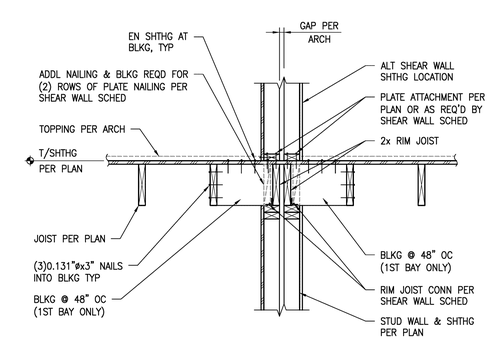

NOTE:
CONTRACTOR TO COORDINATE INSPECTION REQUIREMENTS.

12 DOUBLE PARTITION WALL PARALLEL TO JOISTS

SCALE: 3/4" = 1'-0"

CRAIG A. PENFIELD
STATE OF WASHINGTON
42811
REGISTERED
PROFESSIONAL ENGINEER
06/21/16

REV	DATE	BY	REVISIONS

WCE
WHIPPLE CONSULTING ENGINEERS
2528 NORTH SULLIVAN ROAD
SPOKANE VALLEY, WA 99216
PH: 509-926-2617 FAX: 509-926-0227

CIVIL	
X	STRUCTURAL
	SURVEYING
	TRAFFIC
	PLANNING
	LANDSCAPE
	OTHER

LEGACY VILLAS
18 UNIT
LIBERTY LAKE, WA

DRAWN:	JDK
REVIEWED:	CAP
SCALE:	PER PLAN
PROJ #:	16-1624
DATE:	06/21/16

S4.1

P:\WCE_WORK\2016 WCE PROJECTS\2016-1624 Wyatt Arch - Copper Basin Liberty Lake Apts\DWG\STRUCTURAL\ARCH\ARCH\S1B.dwg, 6/21/2016 2:07:11 PM, jdrock, DWG To PDF.pc3

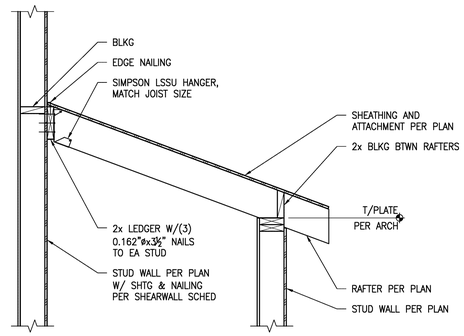

1 NOT USED
SCALE: 3/4" = 1'-0"

2 RAFTERS OVER RISER ROOM
SCALE: 3/4" = 1'-0"

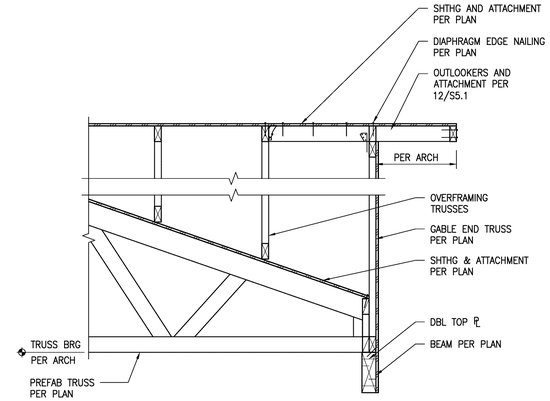

3 TRUSS TO BEAM WITH OVERFRAME
SCALE: 3/4" = 1'-0"

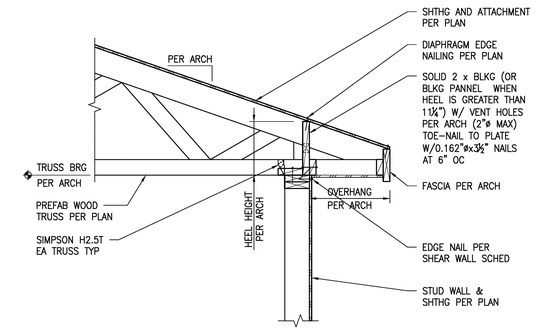

4 TRUSS AT EXTERIOR WALL WITH ENERGY HEEL
SCALE: 3/4" = 1'-0"

5 NOT USED
SCALE: 3/4" = 1'-0"

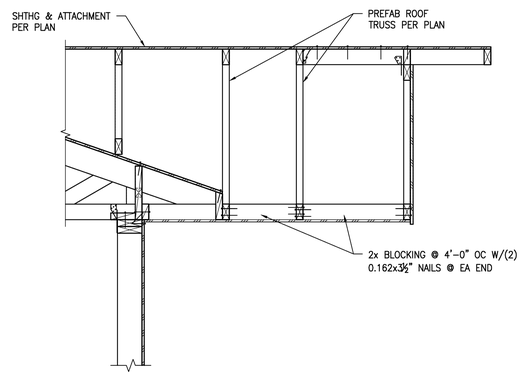

6 ROOF FRAMING AT DECK
SCALE: 3/4" = 1'-0"

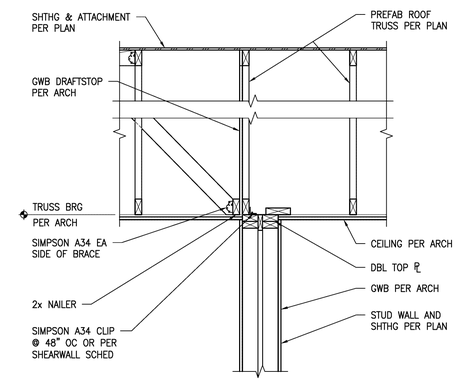

NOTE:
SEE 12/S5.1 FOR BALLANCE OF INFORMATION

7 ROOF FRAMING AT PARTITION WALL
SCALE: 3/4" = 1'-0"

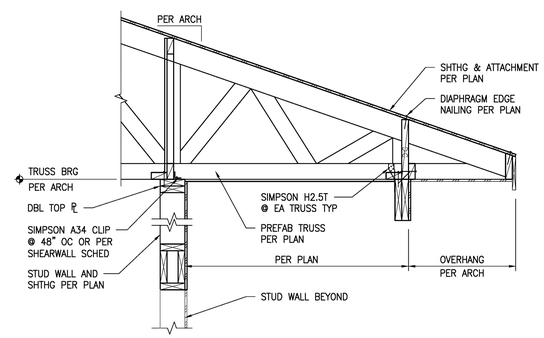

NOTE:
SEE 4/S5.1 FOR BALLANCE OF INFORMATION

8 TRUSS TO EXTERIOR WALL AT DECK
SCALE: 3/4" = 1'-0"

9 NOT USED
SCALE: 3/4" = 1'-0"

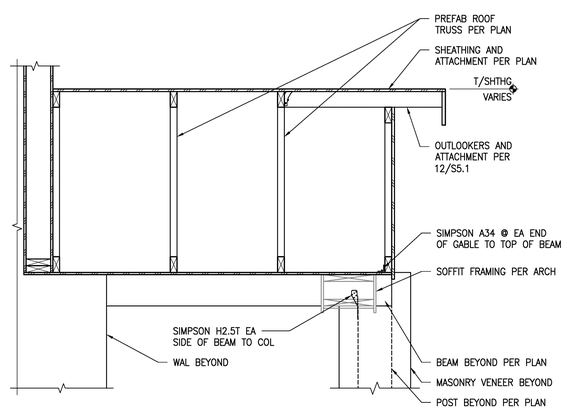

10 ENTRY ROOF FRAMING
SCALE: 3/4" = 1'-0"

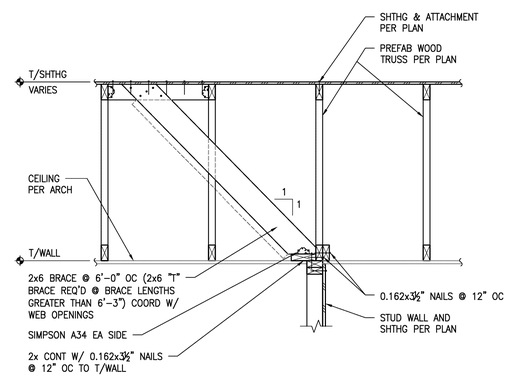

NOTE:
SEE 12/S5.1 FOR BALLANCE OF INFORMATION

11 INTERIOR SHEAR WALL PARALLEL TO ROOF TRUSSES
SCALE: 3/4" = 1'-0"

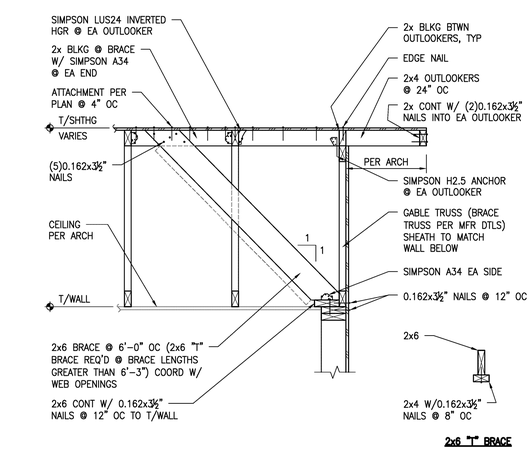

12 BRACING AT TRUSS PARALLEL TO END WALL
SCALE: 3/4" = 1'-0"

CRAIG A. PENFIELD
STATE OF WASHINGTON
42811
REGISTERED PROFESSIONAL ENGINEER
06/21/16

REV	DATE	BY	REVISIONS

WCE
WHIPPLE CONSULTING ENGINEERS
2528 NORTH SULLIVAN ROAD
SPOKANE VALLEY, WA 99216
PH: 509-926-6217 FAX: 509-926-0227

CIVIL
X STRUCTURAL
SURVEYING
TRAFFIC
PLANNING
LANDSCAPE
OTHER

LEGACY VILLAS
18 UNIT
LIBERTY LAKE, WA

DRAWN:	JDK
REVIEWED:	CAP
SCALE:	PER PLAN
PROJ #:	16-1624
DATE:	06/21/16

S5.1

Whipple Consulting Engineers, Inc.

Structural Calculations

Legacy Villas
18-Unit
Liberty Lake, WA

Prepared for:
Wyatt Architects
P.O. Box 141713
Spokane Valley, WA 99214

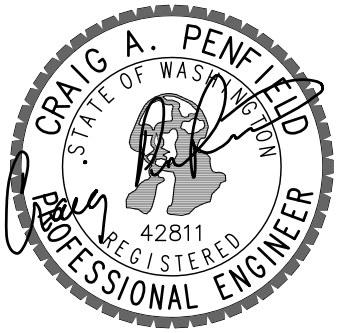

6/21/16

June 21, 2016
WCE Job #2016-1624

2528 N. Sullivan Road, Spokane Valley, WA 99216 PO Box 1566, Veradale, WA 99037
Phone 509-893-2617 • Fax 509-926-0227
Civil, Structural, Traffic, Survey, Landscape Architecture and Entitlements

Whipple Consulting Engineers
2528 North Sullivan, Spokane Valley, WA 99216
509-893-2617 www.whipplece.com

GRAVITY LOADS

ROOF DEAD LOADS	WEIGHT (PSF)
Roofing	3
Sheathing/Metal Deck	1.0
Insulation	1.5
Trusses/Framing	3.0
Ceiling	1.0
MEP	3.0
Miscellaneous	2.5
Total Roof Dead Load	15.0

ROOF LIVE LOADS	WEIGHT (PSF)
Roof Live Construction	20
Snow Loads	40

WALL DEAD LOAD	
2x6	10

FLOOR DEAD LOADS	
Floor	25.0
Corridor/Decks	50

FLOOR LIVE LOADS	
Floor	40
Corridor/Decks	100

LATERAL LOADS

Wind

Wind Speed	110	MPH
Exposure	C	
Importance Category	II	

Seismic

Seismic Importance Factor	1.0		
Seismic Use Group	II		
Site Class	C		
Spectral Response Coeff (S_{DS})	0.274	g	
Spectral Response Coeff (S_{D1})	0.129	g	
Seismic Design Category	B		
Response Modification Factor (R)	6.5		Light Framed Wood Shear Walls
Seismic Response Coeff (C_S)	0.0422		

LATERAL DESIGN

BARKER APARTMENTS - SEISMIC DESIGN CH 12.14.8 ASCE 7-10

$S_{DS} = 2/3\, F_a S_s$

$S_s = 0.3407$ ← SEE ENERCALC OUTPUT

$F_a = 1.4$ PER 12.14.8.1

$S_{DS} = 2/3(1.4)(0.3407) = 0.318$

(EQ 12.14-11) $V = \frac{F S_{DS}}{R} W \rightarrow \frac{(1.2)(0.318)}{6.5} W \Rightarrow V = 0.0636\, W$

$F = 1.2$

$R = 6.5$

BLDG WEIGHT:

ROOF – AREA = 159' x 39' = 6201 ft²

$W = (6201\ ft^2)(15\ PSF)$

$= 93{,}015^{\#} \rightarrow 111{,}618^{\#}$ W/ 20% INCREASE

3rd FLOOR – AREA = 156' x 36 = 5616 ft²

$W = (5616\ ft^2)(25\ PSF) + (5616\ ft^2)(10\ PSF)$

$= 140400^{\#} + 56160^{\#}$

$= 196{,}560^{\#}$

2nd FLOOR – SAME

$W = 196{,}560^{\#}$

$\frac{111{,}618^{\#}}{ROOF}$

$\frac{308178^{\#}}{3rd\ FLOOR}$

$\frac{504738^{\#}}{2nd\ FLOOR}$

TOTAL BLDG WEIGHT = $504{,}738^{\#} = W$

$V = 0.0636(504{,}738^{\#})$

$= 32{,}101$

FOR R = 2 (GYPSUM SHEAR WALLS)

$V = \frac{(1.2)(0.318)}{2}(504{,}738^{\#})$

$= 96{,}304^{\#}$ ∴ WOOD SHEAR WALLS REQ'D TRANSVERSELY

LEVEL FORCES (12.14.8.2) (TO DIAPHRAGM)

$F_x = \frac{W_x}{W} V$

@ 3rd FLOOR

$F_3 = \frac{308178}{504738}(32{,}101)$

$= 19{,}600^{\#}$

@ ROOF

$F_R = \frac{111{,}618^{\#}}{504{,}738}(32{,}101)$

$= 7{,}099^{\#}$

@ 2nd FLOOR

$F_2 = 32{,}101^{\#}$

BARKER APARTMENTS - WIND DESIGN CH 28 PART 2 ASCE 7-10

RISK CATEGORY = II
(OCCUPANCY)

BASIC WIND SPEED, V = 110 mph

WIND LOAD PARAMETERS:

EXPOSURE CATEGORY = B

TOPOGRAPHIC FACTOR, K_{zt} = 1

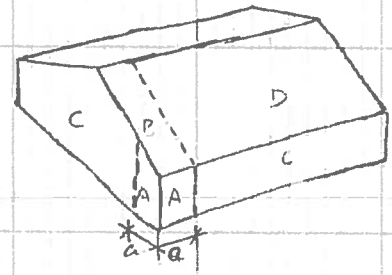

WIND PRESSURES, p_{s30} FIG. 28.6-1

@ 25° ZONE A = 24.1 PSF
ZONE B = 3.9 PSF
ZONE C = 17.4 PSF
ZONE D = 4.0 PSF

COMPARE → a = 10%(36') = 3.6' > 3'
.4h = .4(31') = 12.4'

ADJUSTMENTS FOR WEIGHT & EXPOSURE - FIG. 28.6-1

MEAN h = 30 λ = 1.0

ADJUSTED WIND PRESSURES, $P_s = \lambda K_{zt} P_{s30}$

SURFACE A: $P_s = (1.0)(1)(24.1\ PSF) = 24.1\ PSF(.6) = 14.5\ ASF$

" " B: $P_s = 3.9\ PSF(.6) = 2.4\ PSF$

" " C: $P_s = 17.4\ PSF(.6) = 10.5\ PSF$

" " D: $P_s = 4.0\ PSF(.6) = 2.4\ PSF$

TRANSVERSE

WIND FORCES TO DIAPHRAGMS

BLDG LENGTH = 156' (+3' @ ROOF)
BLDG WIDTH = 36' (+3' @ ROOF)
MEAN h = 31'

$(3.6)\frac{9.75}{19.5} = h = 1.8'$

WIND FORCES
ZONE A = 14.5 PSF
ZONE B = 2.4 PSF
ZONE C = 10.5 PSF
ZONE D = 2.4 PSF

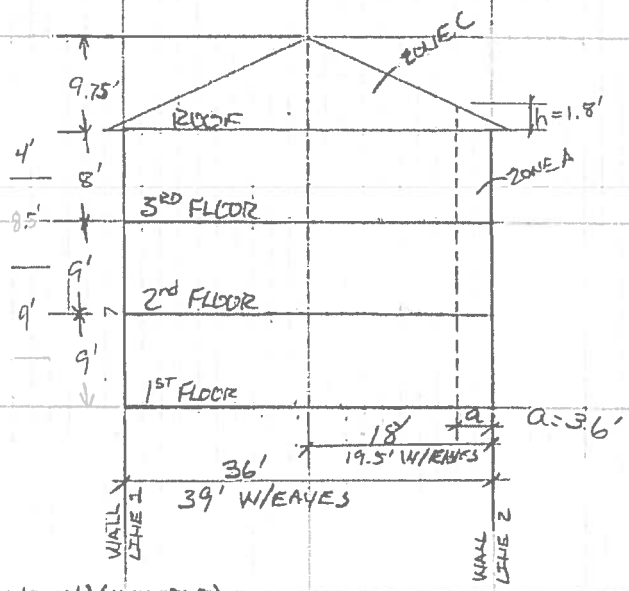

LONGITUDINAL WIND FORCES

@ ROOF

ZONE C = (.5)(19.5')(9.75')(10.5 PSF) + 4'(18' - 3.6')(10.5 PSF)
= 998.16# + 604.8# = 1603#

ZONE A = (.5)(36')(1.8')(14.5 PSF) + (4')(3.6')(14.5 PSF)
= 47# + 209 = 256#

TOTAL LOAD TO ROOF DIAPHRAGM = 1859#

@ 3RD FLOOR

ZONE C = (8.5')(18' - 3.6')(10.5 PSF)
= 1285#

ZONE A = (8.5')(3.6')(14.5 PSF)
= 444#

} 1729#

TOTAL LOAD TO 3rd FLOOR DIA. = 1729# + 1859# = 3588#

@ 2nd FLOOR

ZONE C = (9')(14.4')(10.5 PSF)
= 1361#

ZONE A = (9')(36')(14.5 PSF)
= 470#

} 1831#

TOTAL LOAD TO 2nd FLOOR DIA = 1831# + 3588# = 5419#

TOTAL LONGITUDINAL WIND FORCE AGAINST BLDG:

2(5419#) = 10,838# < 32,101 → SEISMIC CONTROLS LONGITUDINAL

WCE Whipple Consulting Engineers, Inc.
Civil and Transportation Engineering
2528 N. Sullivan Rd. • Spokane Valley, WA 99216
Phone 509-893-2617 • Fax 509-926-0227

NAME OF PROJECT			SHEET NUMBER OF
COMPUTED BY	CHECKED BY	JOB NUMBER	DATE

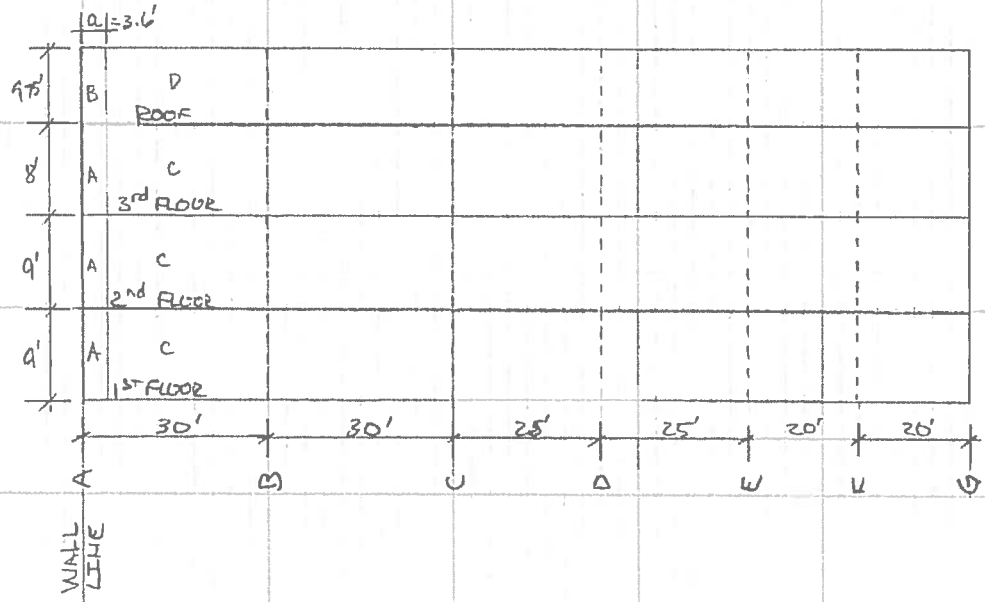

TRANSVERSE WIND FORCES

@ ROOF - WALL LINE A (WORST CASE)

ZONE B = (9.75')(3.6')(2.4 PSF) = 85#
ZONE A = (4')(3.6')(14.5 PSF) = 209#
ZONE D = (9.75')(11.4')(2.4 PSF) = 267#
ZONE C = (4')(11.4')(10.5 PSF) = 479#
TOTAL = 1040#

WALL B (WORST CASE-INTERIOR)

ZONE D = (9.75')(30')(2.4 PSF) = 702#
ZONE C = (4')(30')(10.5 PSF) = 1260#
TOTAL = 1962#

@ 3rd FLOOR

ZONE A = (8.5')(3.6')(14.5 PSF) = 444#
ZONE C = (8.5')(11.4')(10.5 PSF) = 1018#
1462#
+ 1040#
TOTAL = 2502#

ZONE C = (8.5')(30')(10.5 PSF) = 2678#
+ 1962#
TOTAL = 4640#

@ 2nd FLOOR

ZONE A = (9')(3.6')(14.5 PSF) = 470#
ZONE C = (9')(11.4')(10.5 PSF) = 1077#
1547#
+ 2502#
TOTAL = 4049#

ZONE C = (9')(30')(10.5 PSF) = 2835#
+ 4640#
TOTAL = 7475#

TOTAL TRANSVERSE WIND FORCE AGAINST BLDG:

ZONE B = 85#
ZONE A = (21.5')(3.6')(14.5 PSF) = 1122.3
ZONE D = (9.75')(159' - 3.6')(2.4 PSF) = 3636.36
ZONE C = (21.5')(156' - 3.6')(10.5 PSF) = 34404.3

TOTAL F_{WIND} = 39,248# > 32,101# → WIND CONTROLS TRANSVERSE

WCE Whipple Consulting Engineers, Inc.
Civil and Transportation Engineering
2528 N. Sullivan Rd. • Spokane Valley, WA 99216
Phone 509-893-2617 • Fax 509-926-0227

NAME OF PROJECT			SHEET NUMBER OF
COMPUTED BY	CHECKED BY	JOB NUMBER	DATE

SHEAR WALLS AT 1ST FLOOR

ALLOWABLE UNIT SHEAR

SEISMIC = 540 PLF → 270 PLF

WIND = 755 PLF → 377 PLF

LONGITUDINAL FORCE TO WALL LINE 1 = 16,050# (SEE SEISMIC CALCS.)

$\frac{16{,}050^{\#}}{71'} = 226$ PLF → SHEARWALL TYPE W6

@ 2ND FLOOR - LONG. FORCE = 19,600#/2 = 9800#/71' = 138 PLF → W6

@ 3RD FLOOR - LONG FORCE = 7099#/2 = 3550#/71' = 50 PLF → W6

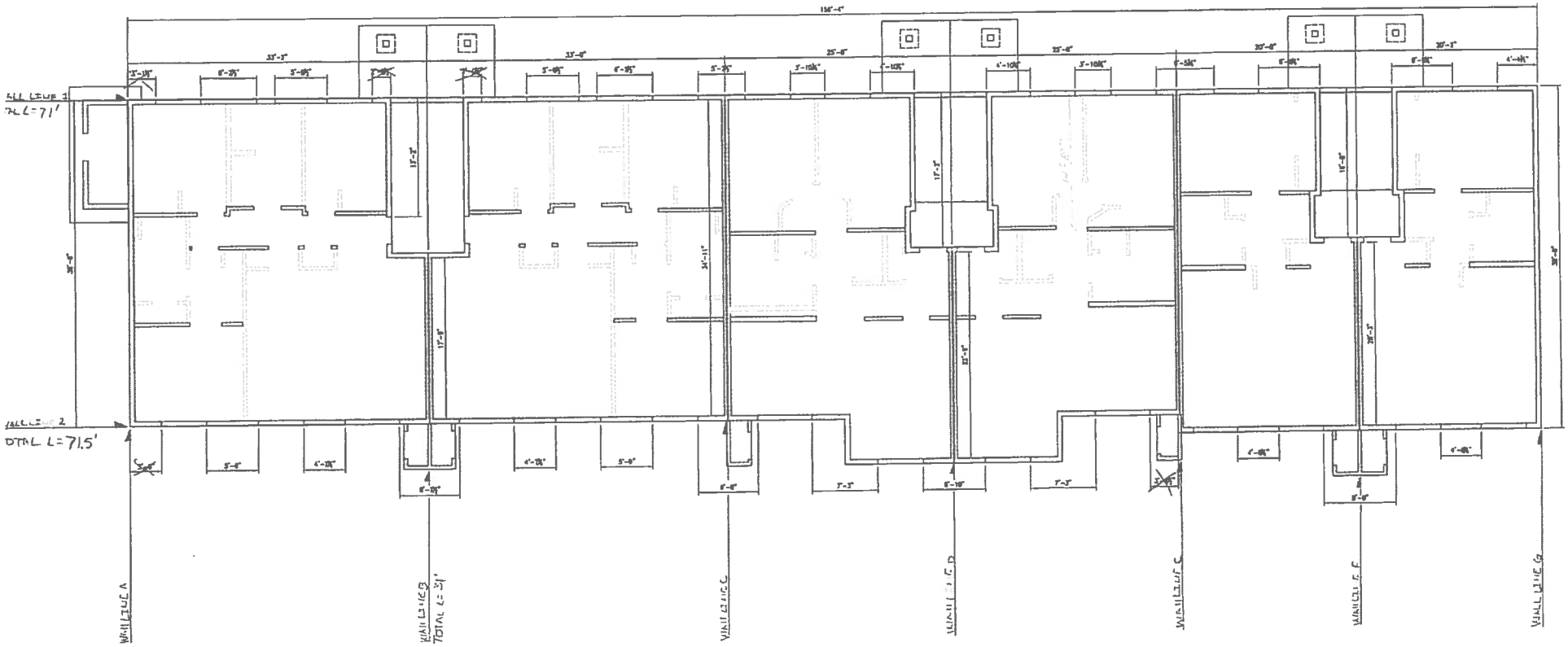

TRANSVERSE FORCE TO WALL LINE A = 4049# (SEE WIND CALCS)

$\frac{4049^{\#}}{36'} = 112.5$ PLF

TRANSVERSE FORCE TO WALL LINE E = 7475# (SEE WIND CALCS)

$\frac{7475^{\#}}{31'} = 241$ PLF

OVERTURNING OF SHORTEST WALL @ GROUND LEVEL

LATERAL LOAD TO WALL = 226 PLF → V = (226 PLF)(3.92')
= 885#

WALL WEIGHT = (3.92')(9')(10PSF)
= 352# = W

LOADS FROM ABOVE (UNIFORM D.L.)

ROOF = 19.5' (15PSF) = 292 PLF
3rd FLOOR = 7.33' (25PSF) = 183 PLF
2nd FLOOR = 7.33' (25PSF) = 183 PLF
TOTAL = 658 PLF = w

P_{DL} @ HEADERS – TRIB = 2.5'

P_{DL} = (2.5')(658 PLF) = 1646#

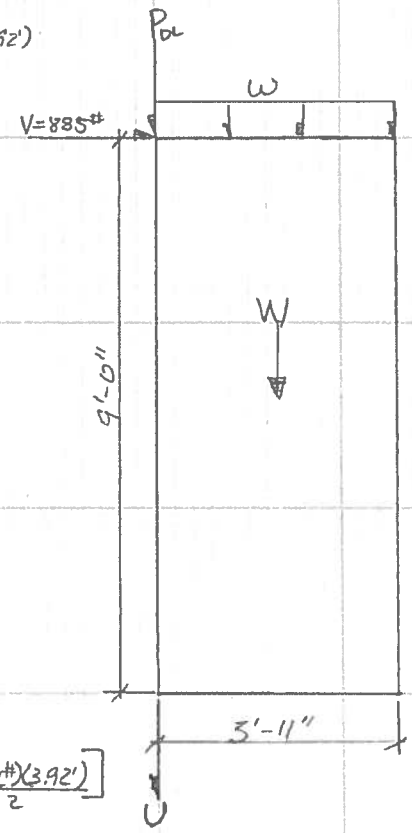

OVERTURNING:

OVERTURNING $M_O = VH = 885^{\#}(9') = 7965$ ft-lb

RESISTING $M_R = .6\left[P_{DL} \cdot L + wL^2/2 + WL/2\right]$

$= .6\left[(1646^{\#})(3.92') + \frac{(658\,PLF)(3.92')^2}{2} + \frac{(352^{\#})(3.92')}{2}\right]$

$= .6(12{,}183$ ft-lb$)$

$= 7310$ ft-lb

U = UPLIFT = $\frac{M_O - M_R}{L}$

$= \frac{7965 - 7310}{3.92'}$

$= 167^{\#}$

NO HOLD-DOWN'S REQ'D

WCE Whipple Consulting Engineers, Inc.
Civil and Transportation Engineering
2528 N. Sullivan Rd. • Spokane Valley, WA 99216
Phone 509-893-2617 • Fax 509-926-0227

NAME OF PROJECT			SHEET NUMBER OF
COMPUTED BY	CHECKED BY	JOB NUMBER	DATE

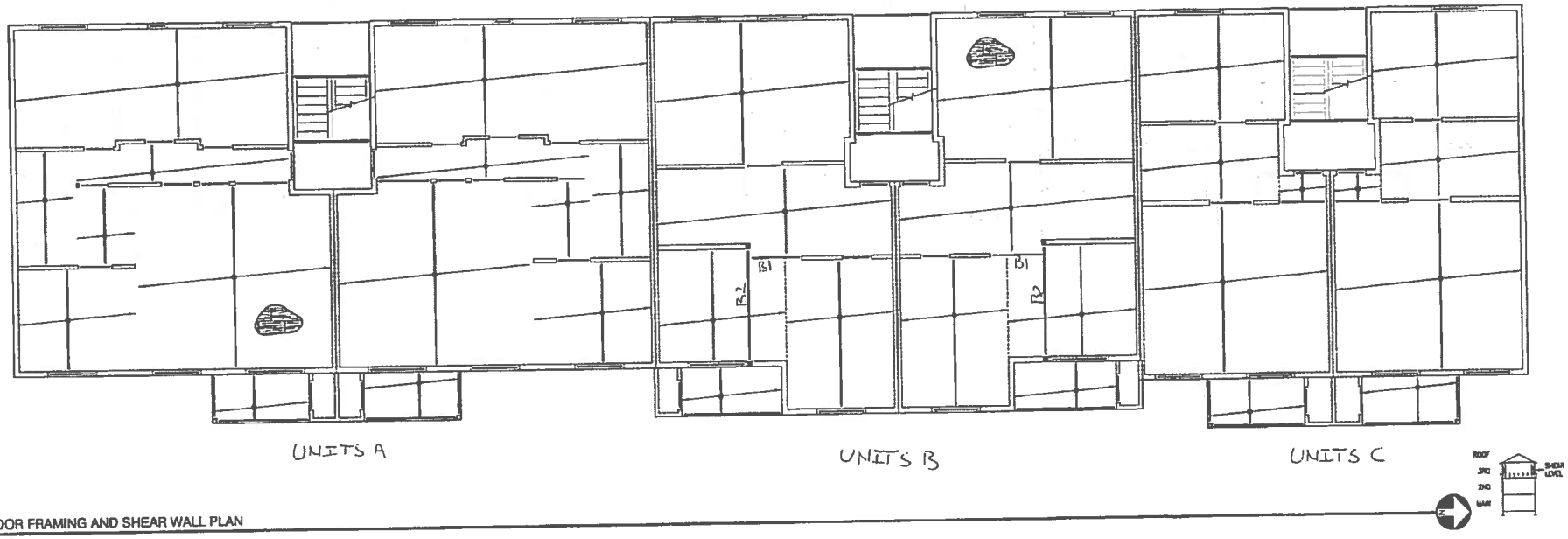

THIRD FLOOR FRAMING AND SHEAR WALL PLAN

SCALE: 3/16" = 1'-0"

BEAMS AND HEADERS

Whipple Consulting Engineers
2528 North Sullivan Road
Spokane Valley, WA 99216
509-893-2617

Multiple Simple Beam

File = P:\WCE_WORK\2VVV8A~Q\20VTXW~F\DBJGBY~H\SEV10W~K\C7A4YC~F\2XGNHE~Z.EC6
ENERCALC, INC. 1983-2016, Build:6.16.6.7, Ver:6.16.6.7
Lic. # : KW-06009199
Licensee : Whipple Consulting Engineers

Description : Floor Joists

Wood Beam Design : Floor Joists

Calculations per NDS 2012, IBC 2012, CBC 2013, ASCE 7-10

BEAM Size : **2-2x10, Sawn, Fully Braced**
Using Allowable Stress Design with IBC 2012 Load Combinations, Major Axis Bending

Wood Species :	Douglas Fir - Larch				Wood Grade :	No.2			
Fb - Tension	900.0 psi	Fc - Prll	1,350.0 psi	Fv	180.0 psi	Ebend- xx	1,600.0 ksi	Density	32.210 pcf
Fb - Compr	900.0 psi	Fc - Perp	625.0 psi	Ft	575.0 psi	Eminbend - xx	580.0 ksi		

Applied Loads

Unif Load: D = 0.0250, L = 0.040 k/ft, Trib= 1.333 ft

Design Summary

Max fb/Fb Ratio = **0.963** : 1
fb : Actual : 1,096.70 psi at 9.500 ft in Span # 1
Fb : Allowable : 1,138.50 psi
Load Comb : +D+L+H

Max fv/FvRatio = **0.227** : 1
fv : Actual : 40.93 psi at 0.000 ft in Span # 1
Fv : Allowable : 180.00 psi
Load Comb : +D+L+H

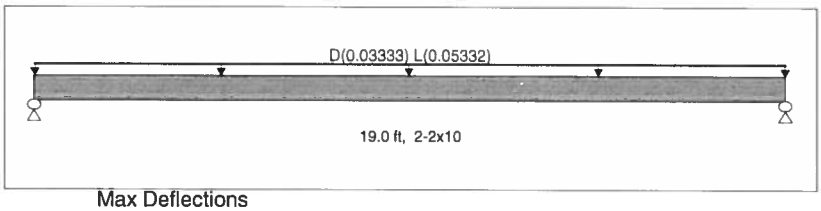

Max Reactions (k)	D	L	Lr	S	W	E	H
Left Support	0.32	0.51					
Right Support	0.32	0.51					

Max Deflections

Downward L+Lr+S	0.496 in	Downward Total	0.807 in
Upward L+Lr+S	0.000 in	Upward Total	0.000 in
Live Load Defl Ratio	459 >360	Total Defl Ratio	282 >180

Wood Beam Design : 2x10 @ 16" O.C.

Calculations per NDS 2012, IBC 2012, CBC 2013, ASCE 7-10

BEAM Size : **2x10, Sawn, Fully Braced**
Using Allowable Stress Design with IBC 2012 Load Combinations, Major Axis Bending

Wood Species :	Douglas Fir - Larch				Wood Grade :	No.2			
Fb - Tension	900.0 psi	Fc - Prll	1,350.0 psi	Fv	180.0 psi	Ebend- xx	1,600.0 ksi	Density	32.210 pcf
Fb - Compr	900.0 psi	Fc - Perp	625.0 psi	Ft	575.0 psi	Eminbend - xx	580.0 ksi		

Applied Loads

Unif Load: D = 0.0250, L = 0.040 k/ft, Trib= 1.333 ft

Design Summary

Max fb/Fb Ratio = **0.973** : 1
fb : Actual : 1,107.33 psi at 6.750 ft in Span # 1
Fb : Allowable : 1,138.50 psi
Load Comb : +D+L+H

Max fv/FvRatio = **0.311** : 1
fv : Actual : 56.06 psi at 12.735 ft in Span # 1
Fv : Allowable : 180.00 psi
Load Comb : +D+L+H

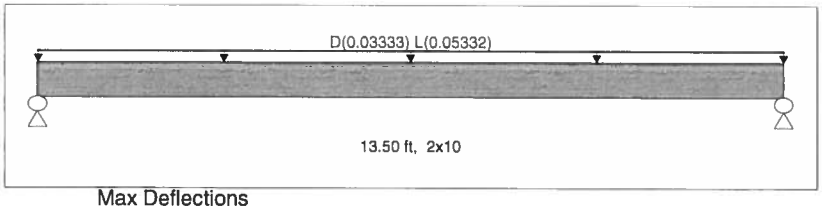

Max Reactions (k)	D	L	Lr	S	W	E	H
Left Support	0.22	0.36					
Right Support	0.22	0.36					

Max Deflections

Downward L+Lr+S	0.253 in	Downward Total	0.411 in
Upward L+Lr+S	0.000 in	Upward Total	0.000 in
Live Load Defl Ratio	640 >360	Total Defl Ratio	393 >180

Wood Beam Design : 2x10 @ 12" O.C.

Calculations per NDS 2012, IBC 2012, CBC 2013, ASCE 7-10

BEAM Size : **2x10, Sawn, Fully Braced**
Using Allowable Stress Design with IBC 2012 Load Combinations, Major Axis Bending

Wood Species :	Douglas Fir - Larch				Wood Grade :	No.2			
Fb - Tension	900.0 psi	Fc - Prll	1,350.0 psi	Fv	180.0 psi	Ebend- xx	1,600.0 ksi	Density	32.210 pcf
Fb - Compr	900.0 psi	Fc - Perp	625.0 psi	Ft	575.0 psi	Eminbend - xx	580.0 ksi		

Applied Loads

Unif Load: D = 0.0250, L = 0.040 k/ft, Trib= 1.0 ft

Design Summary

Max fb/Fb Ratio = **0.962** : 1
fb : Actual : 1,095.08 psi at 7.750 ft in Span # 1
Fb : Allowable : 1,138.50 psi
Load Comb : +D+L+H

Max fv/FvRatio = **0.274** : 1
fv : Actual : 49.38 psi at 14.777 ft in Span # 1
Fv : Allowable : 180.00 psi
Load Comb : +D+L+H

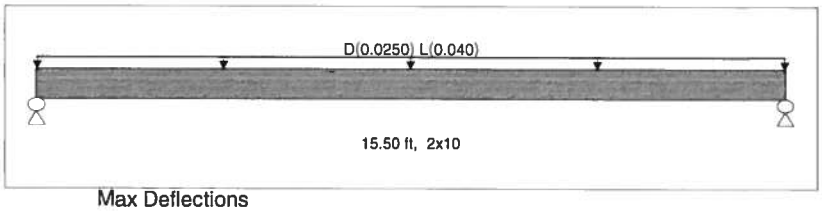

Max Reactions (k)	D	L	Lr	S	W	E	H
Left Support	0.19	0.31					
Right Support	0.19	0.31					

Max Deflections

Downward L+Lr+S	0.330 in	Downward Total	0.536 in
Upward L+Lr+S	0.000 in	Upward Total	0.000 in
Live Load Defl Ratio	563 >360	Total Defl Ratio	346 >180

Whipple Consulting Engineers
2528 North Sullivan Road
Spokane Valley, WA 99216
509-893-2617

Multiple Simple Beam

File = P:\WCE_WORK\2VVV8A~Q\20VTXW~F\DBJGBY~H\SEV10W~K\C7A4YC~F\2XGNHE~Z.EC6
ENERCALC, INC. 1983-2016, Build:6.16.6.7, Ver:6.16.6.7
Lic. # : KW-06009199
Licensee : Whipple Consulting Engineers

Description : Beams & Headers

Wood Beam Design : Beams & Headers

Calculations per NDS 2012, IBC 2012, CBC 2013, ASCE 7-10

BEAM Size : **3-2x10, Sawn, Fully Braced**
Using Allowable Stress Design with IBC 2012 Load Combinations, Major Axis Bending

Wood Species :	Douglas Fir - Larch				Wood Grade :	No.2			
Fb - Tension	900.0 psi	Fc - Prll	1,350.0 psi	Fv	180.0 psi	Ebend- xx	1,600.0 ksi	Density	32.210 pcf
Fb - Compr	900.0 psi	Fc - Perp	625.0 psi	Ft	575.0 psi	Eminbend - xx	580.0 ksi		

Applied Loads

Unif Load: D = 0.0250, L = 0.040 k/ft, Trib= 10.0 ft
Unif Load: D = 0.050, L = 0.040 k/ft, Trib= 3.0 ft

Design Summary

Max fb/Fb Ratio = **0.782** : 1
fb : Actual : 774.17 psi at 3.000 ft in Span # 1
Fb : Allowable : 990.00 psi
Load Comb : +D+L+H

Max fv/FvRatio = **0.413** : 1
fv : Actual : 74.26 psi at 5.240 ft in Span # 1
Fv : Allowable : 180.00 psi
Load Comb : +D+L+H

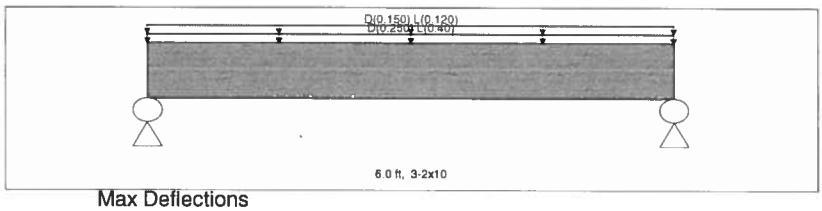

Max Reactions (k)	D	L	Lr	S	W	E	H
Left Support	1.20	1.56					
Right Support	1.20	1.56					

Max Deflections

Downward L+Lr+S	0.032 in	Downward Total	0.057 in
Upward L+Lr+S	0.000 in	Upward Total	0.000 in
Live Load Defl Ratio	2242 >360	Total Defl Ratio	1267 >180

Wood Beam Design : (3)2x8 Deck Beam

Calculations per NDS 2012, IBC 2012, CBC 2013, ASCE 7-10

BEAM Size : **3-2x8, Sawn, Fully Braced**
Using Allowable Stress Design with IBC 2012 Load Combinations, Major Axis Bending

Wood Species :	Douglas Fir - Larch				Wood Grade :	No.2			
Fb - Tension	900.0 psi	Fc - Prll	1,350.0 psi	Fv	180.0 psi	Ebend- xx	1,600.0 ksi	Density	32.210 pcf
Fb - Compr	900.0 psi	Fc - Perp	625.0 psi	Ft	575.0 psi	Eminbend - xx	580.0 ksi		

Applied Loads

Unif Load: D = 0.050, L = 0.040 k/ft, Trib= 2.50 ft

Design Summary

Max fb/Fb Ratio = **0.874** : 1
fb : Actual : 943.88 psi at 5.250 ft in Span # 1
Fb : Allowable : 1,080.00 psi
Load Comb : +D+L+H

Max fv/FvRatio = **0.268** : 1
fv : Actual : 48.16 psi at 9.905 ft in Span # 1
Fv : Allowable : 180.00 psi
Load Comb : +D+L+H

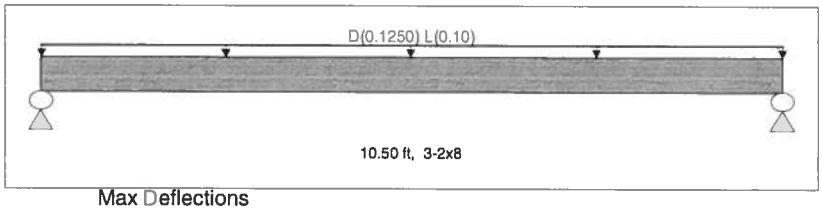

Max Reactions (k)	D	L	Lr	S	W	E	H
Left Support	0.66	0.53					
Right Support	0.66	0.53					

Max Deflections

Downward L+Lr+S	0.120 in	Downward Total	0.271 in
Upward L+Lr+S	0.000 in	Upward Total	0.000 in
Live Load Defl Ratio	1047 >360	Total Defl Ratio	465 >180

Wood Beam Design : 2x8 Deck Joists @ 16" O.C.

Calculations per NDS 2012, IBC 2012, CBC 2013, ASCE 7-10

BEAM Size : **2x8, Sawn, Fully Braced**
Using Allowable Stress Design with IBC 2012 Load Combinations, Major Axis Bending

Wood Species :	Douglas Fir - Larch				Wood Grade :	No.2			
Fb - Tension	900.0 psi	Fc - Prll	1,350.0 psi	Fv	180.0 psi	Ebend- xx	1,600.0 ksi	Density	32.210 pcf
Fb - Compr	900.0 psi	Fc - Perp	625.0 psi	Ft	575.0 psi	Eminbend - xx	580.0 ksi		

Applied Loads

Unif Load: D = 0.050, L = 0.040 k/ft, Trib= 1.333 ft

Design Summary

Max fb/Fb Ratio = **0.276** : 1
fb : Actual : 342.36 psi at 2.500 ft in Span # 1
Fb : Allowable : 1,242.00 psi
Load Comb : +D+L+H

Max fv/FvRatio = **0.175** : 1
fv : Actual : 31.44 psi at 4.400 ft in Span # 1
Fv : Allowable : 180.00 psi
Load Comb : +D+L+H

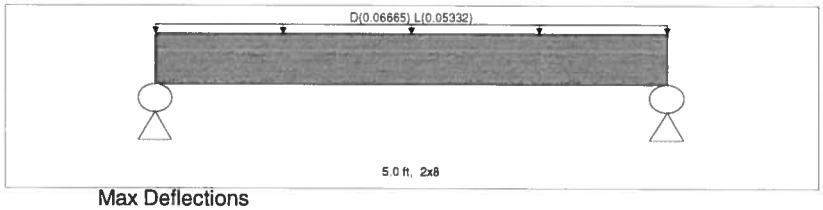

Max Reactions (k)	D	L	Lr	S	W	E	H
Left Support	0.17	0.13					
Right Support	0.17	0.13					

Max Deflections

Downward L+Lr+S	0.010 in	Downward Total	0.022 in
Upward L+Lr+S	0.000 in	Upward Total	0.000 in
Live Load Defl Ratio	6066 >360	Total Defl Ratio	2696 >180

Whipple Consulting Engineers
2528 North Sullivan Road
Spokane Valley, WA 99216
509-893-2617

Multiple Simple Beam

File = P:\WCE_WORK\2VVV8A~Q\20VTXW~F\DBJGBY~H\SEV10W~K\C7A4YC~F\2XGNHE~Z.EC6
ENERCALC, INC. 1983-2016, Build:6.16.6.7, Ver:6.16.6.7
Lic. # : KW-06009199
Licensee : Whipple Consulting Engineers

Wood Beam Design : 2X10 Header - 6' Max Length- 12' Max Trib

Calculations per NDS 2012, IBC 2012, CBC 2013, ASCE 7-10

BEAM Size : **2-2x10, Sawn, Fully Braced**
Using Allowable Stress Design with IBC 2012 Load Combinations, Major Axis Bending

Wood Species :	Douglas Fir - Larch				Wood Grade :	No.2			
Fb - Tension	900.0 psi	Fc - Prll	1,350.0 psi	Fv	180.0 psi	Ebend- xx	1,600.0 ksi	Density	32.210 pcf
Fb - Compr	900.0 psi	Fc - Perp	625.0 psi	Ft	575.0 psi	Eminbend - xx	580.0 ksi		

Applied Loads

Unif Load: D = 0.0250, L = 0.040 k/ft, Trib= 12.0 ft

Design Summary

Max fb/Fb Ratio = **0.994** : 1
fb : Actual : 984.54 psi at 3.000 ft in Span # 1
Fb : Allowable : 990.00 psi
Load Comb : +D+L+H

Max fv/FvRatio = **0.525** : 1
fv : Actual : 94.44 psi at 5.240 ft in Span # 1
Fv : Allowable : 180.00 psi
Load Comb : +D+L+H

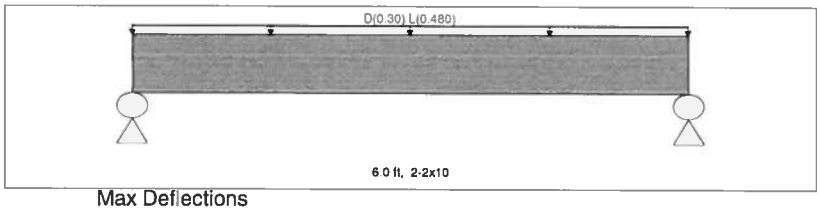

Max Reactions (k)	D	L	Lr	S	W	E	H
Left Support	0.90	1.44					
Right Support	0.90	1.44					

Max Deflections

Downward L+Lr+S	0.044 in	Downward Total	0.072 in
Upward L+Lr+S	0.000 in	Upward Total	0.000 in
Live Load Defl Ratio	1619 >360	Total Defl Ratio	996 >180

Wood Beam Design : B1 - Unit B

Calculations per NDS 2012, IBC 2012, CBC 2013, ASCE 7-10

BEAM Size : **2-2x10, Sawn, Fully Braced**
Using Allowable Stress Design with IBC 2012 Load Combinations, Major Axis Bending

Wood Species :	Douglas Fir - Larch				Wood Grade :	No.2			
Fb - Tension	900.0 psi	Fc - Prll	1,350.0 psi	Fv	180.0 psi	Ebend- xx	1,600.0 ksi	Density	32.210 pcf
Fb - Compr	900.0 psi	Fc - Perp	625.0 psi	Ft	575.0 psi	Eminbend - xx	580.0 ksi		

Applied Loads

Unif Load: D = 0.0250, L = 0.040 k/ft, Trib= 13.0 ft

Design Summary

Max fb/Fb Ratio = **0.905** : 1
fb : Actual : 896.23 psi at 2.750 ft in Span # 1
Fb : Allowable : 990.00 psi
Load Comb : +D+L+H

Max fv/FvRatio = **0.502** : 1
fv : Actual : 90.44 psi at 0.000 ft in Span # 1
Fv : Allowable : 180.00 psi
Load Comb : +D+L+H

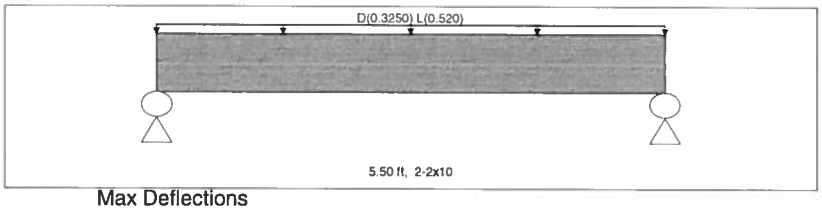

Max Reactions (k)	D	L	Lr	S	W	E	H
Left Support	0.89	1.43					
Right Support	0.89	1.43					

Max Deflections

Downward L+Lr+S	0.034 in	Downward Total	0.055 in
Upward L+Lr+S	0.000 in	Upward Total	0.000 in
Live Load Defl Ratio	1941 >360	Total Defl Ratio	1194 >180

Wood Beam Design : B2 - Unit B

Calculations per NDS 2012, IBC 2012, CBC 2013, ASCE 7-10

BEAM Size : **2-2x10, Sawn, Fully Braced**
Using Allowable Stress Design with IBC 2012 Load Combinations, Major Axis Bending

Wood Species :	Douglas Fir - Larch				Wood Grade :	No.2			
Fb - Tension	900.0 psi	Fc - Prll	1,350.0 psi	Fv	180.0 psi	Ebend- xx	1,600.0 ksi	Density	32.210 pcf
Fb - Compr	900.0 psi	Fc - Perp	625.0 psi	Ft	575.0 psi	Eminbend - xx	580.0 ksi		

Applied Loads

Unif Load: D = 0.0250, L = 0.040 k/ft, Trib= 1.333 ft
Point: D = 0.8940, L = 1.430 k @ 1.0 ft

Design Summary

Max fb/Fb Ratio = **0.802** : 1
fb : Actual : 793.81 psi at 3.412 ft in Span # 1
Fb : Allowable : 990.00 psi
Load Comb : +D+L+H

Max fv/FvRatio = **0.767** : 1
fv : Actual : 138.04 psi at 0.000 ft in Span # 1
Fv : Allowable : 180.00 psi
Load Comb : +D+L+H

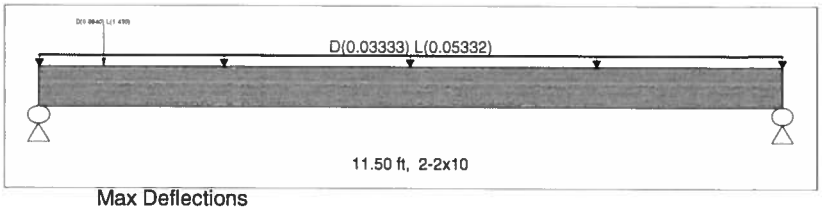

Max Reactions (k)	D	L	Lr	S	W	E	H
Left Support	1.01	1.61					
Right Support	0.27	0.43					

Max Deflections

Downward L+Lr+S	0.132 in	Downward Total	0.214 in
Upward L+Lr+S	0.000 in	Upward Total	0.000 in
Live Load Defl Ratio	1047 >360	Total Defl Ratio	644 >180

Whipple Consulting Engineers
2528 North Sullivan Road
Spokane Valley, WA 99216
509-893-2617

Multiple Simple Beam

File = P:\WCE_WORK\2VVV8A~Q\20VTXW~F\DBJGBY~H\SEV10W~K\C7A4YC~F\2XGNHE~Z.EC6
ENERCALC, INC. 1983-2016, Build:6.16.6.7, Ver:6.16.6.7
Lic. # : KW-06009199
Licensee : Whipple Consulting Engineers

Wood Beam Design : 2X8 Header - 5' Max Length- 11'-6" Max Trib

Calculations per NDS 2012, IBC 2012, CBC 2013, ASCE 7-10

BEAM Size : **2-2x8, Sawn, Fully Braced**
Using Allowable Stress Design with IBC 2012 Load Combinations, Major Axis Bending

Wood Species :	Douglas Fir - Larch				Wood Grade :	No.2			
Fb - Tension	900.0 psi	Fc - Prll	1,350.0 psi	Fv	180.0 psi	Ebend- xx	1,600.0 ksi	Density	32.210 pcf
Fb - Compr	900.0 psi	Fc - Perp	625.0 psi	Ft	575.0 psi	Eminbend - xx	580.0 ksi		

Applied Loads

Unif Load: D = 0.0250, L = 0.040 k/ft, Trib= 11.50 ft

Design Summary

Max fb/Fb Ratio = **0.988** : 1
fb : Actual : 1,066.59 psi at 2.500 ft in Span # 1
Fb : Allowable : 1,080.00 psi
Load Comb : +D+L+H

Max fv/FvRatio = **0.544** : 1
fv : Actual : 97.95 psi at 4.400 ft in Span # 1
Fv : Allowable : 180.00 psi
Load Comb : +D+L+H

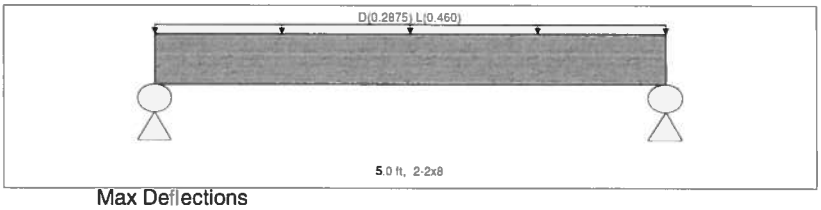

Max Reactions (k)	D	L	Lr	S	W	E	H
Left Support	0.72	1.15					
Right Support	0.72	1.15					

Max Deflections

Downward L+Lr+S	0.043 in	Downward Total	0.069 in
Upward L+Lr+S	0.000 in	Upward Total	0.000 in
Live Load Defl Ratio	1406 >360	Total Defl Ratio	865 >180

Wood Beam Design : Stair Landing Joists

Calculations per NDS 2012, IBC 2012, CBC 2013, ASCE 7-10

BEAM Size : **2x8, Sawn, Fully Braced**
Using Allowable Stress Design with IBC 2012 Load Combinations, Major Axis Bending

Wood Species :	Douglas Fir - Larch				Wood Grade :	No.2			
Fb - Tension	900.0 psi	Fc - Prll	1,350.0 psi	Fv	180.0 psi	Ebend- xx	1,600.0 ksi	Density	32.210 pcf
Fb - Compr	900.0 psi	Fc - Perp	625.0 psi	Ft	575.0 psi	Eminbend - xx	580.0 ksi		

Applied Loads

Unif Load: D = 0.050, L = 0.10 k/ft, Trib= 1.333 ft

Design Summary

Max fb/Fb Ratio = **0.662** : 1
fb : Actual : 821.67 psi at 3.000 ft in Span # 1
Fb : Allowable : 1,242.00 psi
Load Comb : +D+L+H

Max fv/FvRatio = **0.368** : 1
fv : Actual : 66.19 psi at 5.400 ft in Span # 1
Fv : Allowable : 180.00 psi
Load Comb : +D+L+H

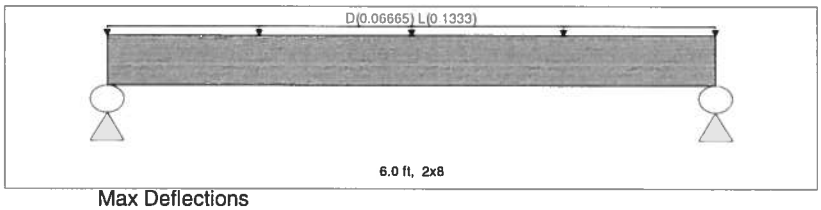

Max Reactions (k)	D	L	Lr	S	W	E	H
Left Support	0.20	0.40					
Right Support	0.20	0.40					

Max Deflections

Downward L+Lr+S	0.051 in	Downward Total	0.077 in
Upward L+Lr+S	0.000 in	Upward Total	0.000 in
Live Load Defl Ratio	1404 >360	Total Defl Ratio	936 >180

Wood Beam Design : Stair Landing Beam - Landing 1

Calculations per NDS 2012, IBC 2012, CBC 2013, ASCE 7-10

BEAM Size : **3.125x10.5, GLB, Fully Braced**
Using Allowable Stress Design with IBC 2012 Load Combinations, Major Axis Bending

Wood Species :	DF/DF				Wood Grade :	24F - V8			
Fb - Tension	2,400.0 psi	Fc - Prll	1,650.0 psi	Fv	265.0 psi	Ebend- xx	1,800.0 ksi	Density	32.210 pcf
Fb - Compr	2,400.0 psi	Fc - Perp	650.0 psi	Ft	1,100.0 psi	Eminbend - xx	930.0 ksi		

Applied Loads

Unif Load: D = 0.050, L = 0.10 k/ft, 0.0 ft to 4.0 ft, Trib= 6.0 ft
Unif Load: D = 0.050, L = 0.10 k/ft, 4.0 to 8.0 ft, Trib= 3.250 ft
Unif Load: D = 0.050, L = 0.10 k/ft, Trib= 2.50 ft

Design Summary

Max fb/Fb Ratio = **0.750** : 1
fb : Actual : 1,800.72 psi at 3.680 ft in Span # 1
Fb : Allowable : 2,400.00 psi
Load Comb : +D+L+H

Max fv/FvRatio = **0.621** : 1
fv : Actual : 164.55 psi at 0.000 ft in Span # 1
Fv : Allowable : 265.00 psi
Load Comb : +D+L+H

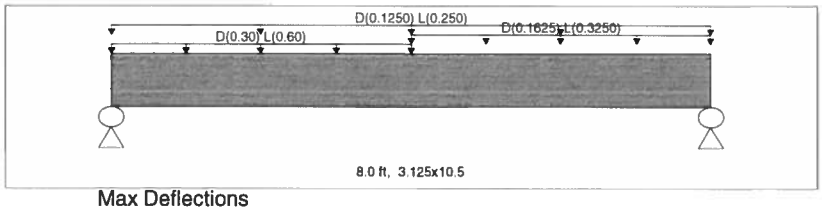

Max Reactions (k)	D	L	Lr	S	W	E	H
Left Support	1.56	3.13					
Right Support	1.29	2.58					

Max Deflections

Downward L+Lr+S	0.122 in	Downward Total	0.183 in
Upward L+Lr+S	0.000 in	Upward Total	0.000 in
Live Load Defl Ratio	788 >360	Total Defl Ratio	525 >180

Whipple Consulting Engineers
2528 North Sullivan Road
Spokane Valley, WA 99216
509-893-2617

Multiple Simple Beam

File = P:\WCE_WORK\2VVV8A~Q\20VTXW~F\DBJGBY~H\SEV10W~K\C7A4YC~F\2XGNHE~Z.EC6
ENERCALC, INC. 1983-2016, Build:6.16.6.7, Ver:6.16.6.7
Lic. # : KW-06009199
Licensee : Whipple Consulting Engineers

Wood Beam Design : Stair Landing Beam - Landing 2 & 3

Calculations per NDS 2012, IBC 2012, CBC 2013, ASCE 7-10

BEAM Size : **3.125x9, GLB, Fully Braced**
Using Allowable Stress Design with IBC 2012 Load Combinations, Major Axis Bending

Wood Species :	DF/DF				Wood Grade :	24F - V8			
Fb - Tension	2,400.0 psi	Fc - Prll	1,650.0 psi	Fv	265.0 psi	Ebend- xx	1,800.0 ksi	Density	32.210 pcf
Fb - Compr	2,400.0 psi	Fc - Perp	650.0 psi	Ft	1,100.0 psi	Eminbend - xx	930.0 ksi		

Applied Loads

Unif Load: D = 0.050, L = 0.10 k/ft, Trib= 3.250 ft
Unif Load: D = 0.050, L = 0.10 k/ft, Trib= 2.50 ft

Design Summary

Max fb/Fb Ratio = **0.818** : 1
fb : Actual : 1,962.67 psi at 4.000 ft in Span # 1
Fb : Allowable : 2,400.00 psi
Load Comb : +D+L+H

Max fv/FvRatio = **0.565** : 1
fv : Actual : 149.65 psi at 0.000 ft in Span # 1
Fv : Allowable : 265.00 psi
Load Comb : +D+L+H

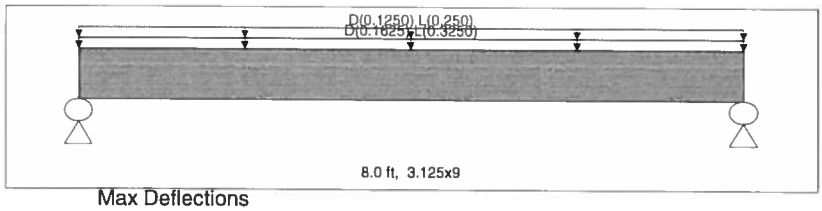

Max Reactions (k)	D	L	Lr	S	W	E	H
Left Support	1.15	2.30					
Right Support	1.15	2.30					

Max Deflections

Downward L+Lr+S	0.156 in	Downward Total	0.234 in
Upward L+Lr+S	0.000 in	Upward Total	0.000 in
Live Load Defl Ratio	615 >360	Total Defl Ratio	410 >180

Wood Beam Design : Roof Beam @ 3rd floor Deck

Calculations per NDS 2012, IBC 2012, CBC 2013, ASCE 7-10

BEAM Size : **3-2x8, Sawn, Fully Braced**
Using Allowable Stress Design with IBC 2012 Load Combinations, Major Axis Bending

Wood Species :	Douglas Fir - Larch				Wood Grade :	No.2			
Fb - Tension	900.0 psi	Fc - Prll	1,350.0 psi	Fv	180.0 psi	Ebend- xx	1,600.0 ksi	Density	32.210 pcf
Fb - Compr	900.0 psi	Fc - Perp	625.0 psi	Ft	575.0 psi	Eminbend - xx	580.0 ksi		

Applied Loads

Unif Load: D = 0.0150, S = 0.0350 k/ft, Trib= 4.0 ft

Design Summary

Max fb/Fb Ratio = **0.676** : 1
fb : Actual : 839.00 psi at 5.250 ft in Span # 1
Fb : Allowable : 1,242.00 psi
Load Comb : +D+S+H

Max fv/FvRatio = **0.207** : 1
fv : Actual : 42.80 psi at 9.905 ft in Span # 1
Fv : Allowable : 207.00 psi
Load Comb : +D+S+H

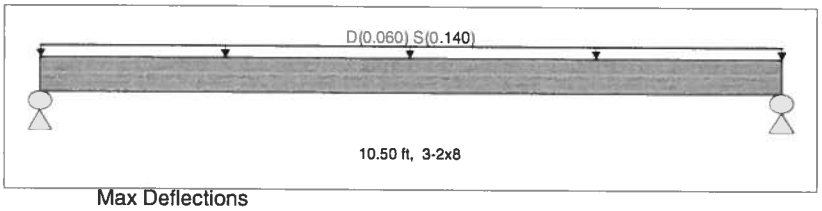

Max Reactions (k)	D	L	Lr	S	W	E	H
Left Support	0.32			0.74			
Right Support	0.32			0.74			

Max Deflections

Downward L+Lr+S	0.168 in	Downward Total	0.241 in
Upward L+Lr+S	0.000 in	Upward Total	0.000 in
Live Load Defl Ratio	748 >360	Total Defl Ratio	523 >180

Wood Beam Design : Typical Roof Header

Calculations per NDS 2012, IBC 2012, CBC 2013, ASCE 7-10

BEAM Size : **3-2x10, Sawn, Fully Braced**
Using Allowable Stress Design with IBC 2012 Load Combinations, Major Axis Bending

Wood Species :	Douglas Fir - Larch				Wood Grade :	No.2			
Fb - Tension	900.0 psi	Fc - Prll	1,350.0 psi	Fv	180.0 psi	Ebend- xx	1,600.0 ksi	Density	32.210 pcf
Fb - Compr	900.0 psi	Fc - Perp	625.0 psi	Ft	575.0 psi	Eminbend - xx	580.0 ksi		

Applied Loads

Unif Load: D = 0.0150, S = 0.0350 k/ft, Trib= 22.0 ft

Design Summary

Max fb/Fb Ratio = **0.813** : 1
fb : Actual : 925.64 psi at 3.000 ft in Span # 1
Fb : Allowable : 1,138.50 psi
Load Comb : +D+S+H

Max fv/FvRatio = **0.429** : 1
fv : Actual : 88.79 psi at 5.240 ft in Span # 1
Fv : Allowable : 207.00 psi
Load Comb : +D+S+H

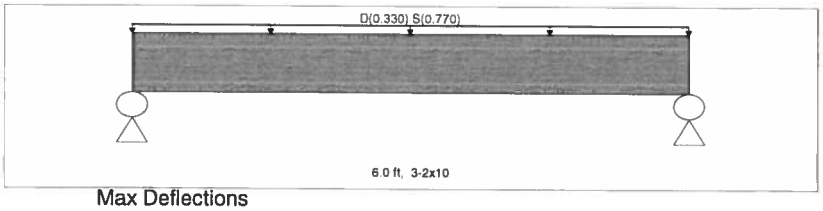

Max Reactions (k)	D	L	Lr	S	W	E	H
Left Support	0.99			2.31			
Right Support	0.99			2.31			

Max Deflections

Downward L+Lr+S	0.048 in	Downward Total	0.068 in
Upward L+Lr+S	0.000 in	Upward Total	0.000 in
Live Load Defl Ratio	1514 >360	Total Defl Ratio	1060 >180

COLUMNS

Whipple Consulting Engineers
2528 North Sullivan Road
Spokane Valley, WA 99216
509-893-2617

Wood Column

File = P:\WCE_WORK\2VVV8A~Q\20VTXW~F\DBJGBY~H\SEV10W~K\C7A4YC~F\2XGNHE~Z.EC6
ENERCALC, INC. 1983-2016, Build:6.16.6.7, Ver:6.16.6.7
Lic. # : KW-06009199
Licensee : Whipple Consulting Engineers

Description : 2x6 Stud @ 16" O.C. - 1st Floor - Exterior

Code References

Calculations per 2012 NDS, IBC 2012, CBC 2013, ASCE 7-10
Load Combinations Used : IBC 2012

General Information

Analysis Method : Allowable Stress Design
End Fixities Top & Bottom Pinned
Overall Column Height 9.0 ft
(Used for non-slender calculations)

Wood Species Douglas Fir - Larch
Wood Grade No.2

Fb - Tension	900.0 psi	Fv	180.0 psi
Fb - Compr	900.0 psi	Ft	575.0 psi
Fc - Prll	1,350.0 psi	Density	32.210 pcf
Fc - Perp	625.0 psi		

E : Modulus of Elasticity . . .	x-x Bending	y-y Bending	Axial
Basic	1,600.0	1,600.0	1,600.0 ksi
Minimum	580.0	580.0	

Wood Section Name **2x6**
Wood Grading/Manuf. Graded Lumber
Wood Member Type Sawn

Exact Width	**1.50**	in
Exact Depth	**5.50**	in
Area	8.250	in^2
Ix	20.797	in^4
Iy	1.547	in^4

Allow Stress Modification Factors

Cf or Cv for Bending	1.30
Cf or Cv for Compression	1.10
Cf or Cv for Tension	1.30
Cm : Wet Use Factor	1.0
Ct : Temperature Factor	1.0
Cfu : Flat Use Factor	1.0
Kf : Built-up columns	1.0 NDS 15.3.2
Use Cr : Repetitive ?	Yes

Brace condition for deflection (buckling) along columns :
X-X (width) axis : Fully braced against buckling along X-X Axis
Y-Y (depth) axis : Unbraced Length for X-X Axis buckling = 9.0 ft, K = 1.0

Applied Loads

Service loads entered. Load Factors will be applied for calculations.

Column self weight included : 16.608 lbs * Dead Load Factor
AXIAL LOADS . . .
Roof - 24' Trib - DL=15 SL=35: Axial Load at 9.0 ft, D = 0.720, S = 1.680 k
3rd Floor - 10' Trib - DL=25, LL=40: Axial Load at 9.0 ft, D = 0.3330, L = 0.5330 k
2nd Floor - 10' Trib - DL=25, LL=40: Axial Load at 9.0 ft, D = 0.3330, L = 0.5330 k
3rd Floor Deck - 2.5' Trib - DL=50, LL=40: Axial Load at 9.0 ft, D = 0.1670, L = 0.1330 k
3rd Floor Deck - 2.5' Trib - DL=50, LL=40: Axial Load at 9.0 ft, D = 0.1670, L = 0.1330 k
Walls Above - 26' - DL=10: Axial Load at 9.0 ft, D = 0.260 k
BENDING LOADS . . .
Wind: Lat. Uniform Load creating Mx-x, W = 0.02670 k/ft

DESIGN SUMMARY

Bending & Shear Check Results

PASS Max. Axial+Bending Stress Ratio = **0.5561 : 1**

Load Combination	+D+0.750L+0.750S
Governing NDS Forumla	Comp Only, fc/Fc'
Location of max.above base	0.0 ft
At maximum location values are . . .	
Applied Axial	4.256 k
Applied Mx	0.0 k-ft
Applied My	0.0 k-ft
Fc : Allowable	927.65 psi

PASS Maximum Shear Stress Ratio = **0.04855 : 1**

Load Combination	+D+0.60W
Location of max.above base	9.0 ft
Applied Design Shear	13.107 psi
Allowable Shear	180.0 psi

Maximum SERVICE Lateral Load Reactions . .

Top along Y-Y	0.1202 k	Bottom along Y-Y	0.1202 k
Top along X-X	0.0 k	Bottom along X-X	0.0 k

Maximum SERVICE Load Lateral Deflections . . .

Along Y-Y 0.1197 in at 4.530 ft above base
for load combination : W Only
Along X-X 0.0 in at 0.0 ft above base
for load combination : n/a

Other Factors used to calculate allowable stresses . . .

Bending	Compression	Tension

Load Combination Results

Load Combination	C_D	C_P	Maximum Axial + Bending Stress Ratios: Stress Ratio	Status	Location	Maximum Shear Ratios: Stress Ratio	Status	Location
D Only	1.000	0.625	0.2609	PASS	0.0 ft	0.0	PASS	9.0 ft
+D+L	1.000	0.625	0.4349	PASS	0.0 ft	0.0	PASS	9.0 ft
+D+Lr	1.000	0.625	0.2609	PASS	0.0 ft	0.0	PASS	9.0 ft
+D+S	1.000	0.625	0.4804	PASS	0.0 ft	0.0	PASS	9.0 ft

Whipple Consulting Engineers
2528 North Sullivan Road
Spokane Valley, WA 99216
509-893-2617

Wood Column

File = P:\WCE_WORK\2VVV8A~Q\20VTXW~F\DBJGBY~H\SEV10W~K\C7A4YC~F\2XGNHE~Z.EC6
ENERCALC, INC. 1983-2016, Build:6.16.6.7, Ver:6.16.6.7
Lic. # : KW-06009199
Licensee : Whipple Consulting Engineers

Description : 2x6 Stud @ 16" O.C. - 1st Floor - Exterior

Load Combination Results

Load Combination	C_D	C_P	Maximum Axial + Bending Stress Ratios			Maximum Shear Ratios		
			Stress Ratio	Status	Location	Stress Ratio	Status	Location
+D+0.750Lr+0.750L	1.000	0.625	0.3914	PASS	0.0 ft	0.0	PASS	9.0 ft
+D+0.750L+0.750S	1.000	0.625	0.5561	PASS	0.0 ft	0.0	PASS	9.0 ft
+D+0.60W	1.000	0.625	0.3059	PASS	4.470 ft	0.04855	PASS	9.0 ft
+D+0.70E	1.000	0.625	0.2609	PASS	0.0 ft	0.0	PASS	9.0 ft
+D+0.750Lr+0.750L+0.450W	1.000	0.625	0.3914	PASS	0.0 ft	0.03641	PASS	9.0 ft
+D+0.750L+0.750S+0.450W	1.000	0.625	0.5561	PASS	0.0 ft	0.03641	PASS	9.0 ft
+D+0.750L+0.750S+0.5250E	1.000	0.625	0.5561	PASS	0.0 ft	0.0	PASS	9.0 ft
+0.60D+0.60W	1.000	0.625	0.2412	PASS	4.470 ft	0.04855	PASS	9.0 ft
+0.60D+0.70E	1.000	0.625	0.1565	PASS	0.0 ft	0.0	PASS	9.0 ft

Maximum Deflections for Load Combinations

Load Combination	Max. X-X Deflection	Distance	Max. Y-Y Deflection	Distance
D Only	0.0000 in	0.000 ft	0.000 in	0.000 ft
+D+L	0.0000 in	0.000 ft	0.000 in	0.000 ft
+D+Lr	0.0000 in	0.000 ft	0.000 in	0.000 ft
+D+S	0.0000 in	0.000 ft	0.000 in	0.000 ft
+D+0.750Lr+0.750L	0.0000 in	0.000 ft	0.000 in	0.000 ft
+D+0.750L+0.750S	0.0000 in	0.000 ft	0.000 in	0.000 ft
+D+0.60W	0.0000 in	0.000 ft	0.072 in	4.530 ft
+D+0.70E	0.0000 in	0.000 ft	0.000 in	0.000 ft
+D+0.750Lr+0.750L+0.450W	0.0000 in	0.000 ft	0.054 in	4.530 ft
+D+0.750L+0.750S+0.450W	0.0000 in	0.000 ft	0.054 in	4.530 ft
+D+0.750L+0.750S+0.5250E	0.0000 in	0.000 ft	0.000 in	0.000 ft
+0.60D+0.60W	0.0000 in	0.000 ft	0.072 in	4.530 ft
+0.60D+0.70E	0.0000 in	0.000 ft	0.000 in	0.000 ft
D Only	0.0000 in	0.000 ft	0.000 in	0.000 ft
Lr Only	0.0000 in	0.000 ft	0.000 in	0.000 ft
L Only	0.0000 in	0.000 ft	0.000 in	0.000 ft
S Only	0.0000 in	0.000 ft	0.000 in	0.000 ft
W Only	0.0000 in	0.000 ft	0.120 in	4.530 ft
E Only	0.0000 in	0.000 ft	0.000 in	0.000 ft
H Only	0.0000 in	0.000 ft	0.000 in	0.000 ft

Whipple Consulting Engineers
2528 North Sullivan Road
Spokane Valley, WA 99216
509-893-2617

Wood Column

File = P:\WCE_WORK\2VVV8A~Q\20VTXW~F\DBJGBY~H\SEV10W~K\C7A4YC~F\2XGNHE~Z.EC6
ENERCALC, INC. 1983-2016, Build:6.16.6.7, Ver:6.16.6.7
Lic. # : KW-06009199
Licensee : Whipple Consulting Engineers

Description : 2x4 Stud @ 16" O.C. - 1st Floor - Dbl Partition Walls

Code References

Calculations per 2012 NDS, IBC 2012, CBC 2013, ASCE 7-10
Load Combinations Used : IBC 2012

General Information

Analysis Method : Allowable Stress Design
End Fixities Top & Bottom Pinned
Overall Column Height 10.0 ft
(Used for non-slender calculations)

Wood Species Douglas Fir - Larch
Wood Grade No.2

Fb - Tension	900.0 psi	Fv	180.0 psi
Fb - Compr	900.0 psi	Ft	575.0 psi
Fc - Prll	1,350.0 psi	Density	32.210 pcf
Fc - Perp	625.0 psi		

E : Modulus of Elasticity . . .

	x-x Bending	y-y Bending	Axial
Basic	1,600.0	1,600.0	1,600.0 ksi
Minimum	580.0	580.0	

Wood Section Name **2x4**
Wood Grading/Manuf. Graded Lumber
Wood Member Type Sawn

Exact Width	**1.50**	in
Exact Depth	**3.50**	in
Area	5.250	in^2
Ix	5.359	in^4
Iy	0.9844	in^4

Allow Stress Modification Factors

Cf or Cv for Bending	1.50
Cf or Cv for Compression	1.150
Cf or Cv for Tension	1.50
Cm : Wet Use Factor	1.0
Ct : Temperature Factor	1.0
Cfu : Flat Use Factor	1.0
Kf : Built-up columns	1.0 NDS 15.3.2
Use Cr : Repetitive ?	Yes

Brace condition for deflection (buckling) along columns :
X-X (width) axis : Fully braced against buckling along X-X Axis
Y-Y (depth) axis : Unbraced Length for X-X Axis buckling = 10.0 ft, K = 1.0

Applied Loads

Service loads entered. Load Factors will be applied for calculations.

Column self weight included : 11.743 lbs * Dead Load Factor
AXIAL LOADS . . .
Roof - 2' Trib - DL=15 SL=35: Axial Load at 10.0 ft, D = 0.040, S = 0.0940 k
3rd Floor - 6' Trib - DL=25, LL=40: Axial Load at 10.0 ft, D = 0.20, L = 0.320 k
2nd Floor - 6' Trib - DL=25, LL=40: Axial Load at 10.0 ft, D = 0.20, L = 0.320 k
Walls Above - 17' - DL=10: Axial Load at 10.0 ft, D = 0.2260 k

DESIGN SUMMARY

Bending & Shear Check Results

PASS Max. Axial+Bending Stress Ratio = **0.6591 : 1**

Load Combination	+D+L
Governing NDS Forumla	Comp Only, fc/Fc'
Location of max.above base	0.0 ft
At maximum location values are . . .	
Applied Axial	1.318 k
Applied Mx	0.0 k-ft
Applied My	0.0 k-ft
Fc : Allowable	380.822 psi

PASS Maximum Shear Stress Ratio = **0.0 : 1**

Load Combination	+0.60D+0.70E
Location of max.above base	10.0 ft
Applied Design Shear	0.0 psi
Allowable Shear	180.0 psi

Maximum SERVICE Lateral Load Reactions . .

Top along Y-Y	0.0 k	Bottom along Y-Y	0.0 k
Top along X-X	0.0 k	Bottom along X-X	0.0 k

Maximum SERVICE Load Lateral Deflections . . .

Along Y-Y 0.0 in at 0.0 ft above base
for load combination : n/a
Along X-X 0.0 in at 0.0 ft above base
for load combination : n/a

Other Factors used to calculate allowable stresses . . .

Bending	Compression	Tension

Load Combination Results

Load Combination	C_D	C_P	Maximum Axial + Bending Stress Ratios: Stress Ratio	Status	Location	Maximum Shear Ratios: Stress Ratio	Status	Location
D Only	1.000	0.245	0.3390	PASS	0.0 ft	0.0	PASS	10.0 ft
+D+L	1.000	0.245	0.6591	PASS	0.0 ft	0.0	PASS	10.0 ft
+D+Lr	1.000	0.245	0.3390	PASS	0.0 ft	0.0	PASS	10.0 ft
+D+S	1.000	0.245	0.3860	PASS	0.0 ft	0.0	PASS	10.0 ft
+D+0.750Lr+0.750L	1.000	0.245	0.5791	PASS	0.0 ft	0.0	PASS	10.0 ft
+D+0.750L+0.750S	1.000	0.245	0.6143	PASS	0.0 ft	0.0	PASS	10.0 ft
+D+0.60W	1.000	0.245	0.3390	PASS	0.0 ft	0.0	PASS	10.0 ft
+D+0.70E	1.000	0.245	0.3390	PASS	0.0 ft	0.0	PASS	10.0 ft

Whipple Consulting Engineers
2528 North Sullivan Road
Spokane Valley, WA 99216
509-893-2617

Wood Column

File = P:\WCE_WORK\2VVV8A~Q\20VTXW~F\DBJGBY~H\SEV10W~K\C7A4YC~F\2XGNHE~Z.EC6
ENERCALC, INC. 1983-2016, Build:6.16.6.7, Ver:6.16.6.7
Lic. # : KW-06009199
Licensee : Whipple Consulting Engineers

Description : 2x4 Stud @ 16" O.C. - 1st Floor - Dbl Partition Walls

Load Combination Results

Load Combination	C_D	C_P	Maximum Axial + Bending Stress Ratios			Maximum Shear Ratios		
			Stress Ratio	Status	Location	Stress Ratio	Status	Location
+D+0.750Lr+0.750L+0.450W	1.000	0.245	0.5791	PASS	0.0 ft	0.0	PASS	10.0 ft
+D+0.750L+0.750S+0.450W	1.000	0.245	0.6143	PASS	0.0 ft	0.0	PASS	10.0 ft
+D+0.750L+0.750S+0.5250E	1.000	0.245	0.6143	PASS	0.0 ft	0.0	PASS	10.0 ft
+0.60D+0.60W	1.000	0.245	0.2034	PASS	0.0 ft	0.0	PASS	10.0 ft
+0.60D+0.70E	1.000	0.245	0.2034	PASS	0.0 ft	0.0	PASS	10.0 ft

Maximum Deflections for Load Combinations

Load Combination	Max. X-X Deflection	Distance	Max. Y-Y Deflection	Distance
D Only	0.0000 in	0.000 ft	0.000 in	0.000 ft
+D+L	0.0000 in	0.000 ft	0.000 in	0.000 ft
+D+Lr	0.0000 in	0.000 ft	0.000 in	0.000 ft
+D+S	0.0000 in	0.000 ft	0.000 in	0.000 ft
+D+0.750Lr+0.750L	0.0000 in	0.000 ft	0.000 in	0.000 ft
+D+0.750L+0.750S	0.0000 in	0.000 ft	0.000 in	0.000 ft
+D+0.60W	0.0000 in	0.000 ft	0.000 in	0.000 ft
+D+0.70E	0.0000 in	0.000 ft	0.000 in	0.000 ft
+D+0.750Lr+0.750L+0.450W	0.0000 in	0.000 ft	0.000 in	0.000 ft
+D+0.750L+0.750S+0.450W	0.0000 in	0.000 ft	0.000 in	0.000 ft
+D+0.750L+0.750S+0.5250E	0.0000 in	0.000 ft	0.000 in	0.000 ft
+0.60D+0.60W	0.0000 in	0.000 ft	0.000 in	0.000 ft
+0.60D+0.70E	0.0000 in	0.000 ft	0.000 in	0.000 ft
D Only	0.0000 in	0.000 ft	0.000 in	0.000 ft
Lr Only	0.0000 in	0.000 ft	0.000 in	0.000 ft
L Only	0.0000 in	0.000 ft	0.000 in	0.000 ft
S Only	0.0000 in	0.000 ft	0.000 in	0.000 ft
W Only	0.0000 in	0.000 ft	0.000 in	0.000 ft
E Only	0.0000 in	0.000 ft	0.000 in	0.000 ft
H Only	0.0000 in	0.000 ft	0.000 in	0.000 ft

Whipple Consulting Engineers
2528 North Sullivan Road
Spokane Valley, WA 99216
509-893-2617

Wood Column

File = P:\WCE_WORK\2VVV8A~Q\20VTXW~F\DBJGBY~H\SEV10W~K\C7A4YC~F\2XGNHE~Z.EC6
ENERCALC, INC. 1983-2016, Build:6.16.6.7, Ver:6.16.6.7
Lic. # : KW-06009199
Licensee : Whipple Consulting Engineers

Description : 2x4 Stud @ 16" O.C. - 1st Floor - Unit Interior Bearing

Code References

Calculations per 2012 NDS, IBC 2012, CBC 2013, ASCE 7-10
Load Combinations Used : IBC 2012

General Information

Analysis Method : Allowable Stress Design
End Fixities Top & Bottom Pinned
Overall Column Height 8.0 ft
(Used for non-slender calculations)

Wood Species Douglas Fir - Larch
Wood Grade No.2

Fb - Tension	900.0 psi	Fv	180.0 psi
Fb - Compr	900.0 psi	Ft	575.0 psi
Fc - Prll	1,350.0 psi	Density	32.210 pcf
Fc - Perp	625.0 psi		

E : Modulus of Elasticity . . .	x-x Bending	y-y Bending	Axial
Basic	1,600.0	1,600.0	1,600.0 ksi
Minimum	580.0	580.0	

Wood Section Name **2x4**
Wood Grading/Manuf. Graded Lumber
Wood Member Type Sawn

Exact Width	**1.50**	in
Exact Depth	**3.50**	in
Area	5.250	in^2
Ix	5.359	in^4
Iy	0.9844	in^4

Allow Stress Modification Factors

Cf or Cv for Bending	1.50
Cf or Cv for Compression	1.150
Cf or Cv for Tension	1.50
Cm : Wet Use Factor	1.0
Ct : Temperature Factor	1.0
Cfu : Flat Use Factor	1.0
Kf : Built-up columns	1.0 NDS 15.3.2
Use Cr : Repetitive ?	Yes

Brace condition for deflection (buckling) along columns :
X-X (width) axis : Fully braced against buckling along X-X Axis
Y-Y (depth) axis : Unbraced Length for X-X Axis buckling = 8.0 ft, K = 1.0

Applied Loads

Service loads entered. Load Factors will be applied for calculations.

Column self weight included : 9.395 lbs * Dead Load Factor
AXIAL LOADS . . .
3rd Floor - 13' Trib - DL=25, LL=40: Axial Load at 8.0 ft, D = 0.4330, L = 0.6920 k
2nd Floor - 13' Trib - DL=25, LL=40: Axial Load at 8.0 ft, D = 0.4330, L = 0.6920 k
Walls Above - 17' - DL=10: Axial Load at 8.0 ft, D = 0.2260 k

DESIGN SUMMARY

Bending & Shear Check Results

PASS Max. Axial+Bending Stress Ratio = **0.8333 : 1**
Load Combination +D+L
Governing NDS Forumla Comp Only, fc/Fc'
Location of max.above base 0.0 ft
At maximum location values are . . .
Applied Axial 2.485 k
Applied Mx 0.0 k-ft
Applied My 0.0 k-ft
Fc : Allowable 568.13 psi

PASS Maximum Shear Stress Ratio = **0.0 : 1**
Load Combination +0.60D+0.70E
Location of max.above base 8.0 ft
Applied Design Shear 0.0 psi
Allowable Shear 180.0 psi

Maximum SERVICE Lateral Load Reactions . .

Top along Y-Y	0.0 k	Bottom along Y-Y	0.0 k
Top along X-X	0.0 k	Bottom along X-X	0.0 k

Maximum SERVICE Load Lateral Deflections . . .

Along Y-Y 0.0 in at 0.0 ft above base
for load combination : n/a
Along X-X 0.0 in at 0.0 ft above base
for load combination : n/a

Other Factors used to calculate allowable stresses . . .

	Bending	Compression	Tension

Load Combination Results

Load Combination	C_D	C_P	Maximum Axial + Bending Stress Ratios: Stress Ratio	Status	Location	Maximum Shear Ratios: Stress Ratio	Status	Location
D Only	1.000	0.366	0.3693	PASS	0.0 ft	0.0	PASS	8.0 ft
+D+L	1.000	0.366	0.8333	PASS	0.0 ft	0.0	PASS	8.0 ft
+D+Lr	1.000	0.366	0.3693	PASS	0.0 ft	0.0	PASS	8.0 ft
+D+S	1.000	0.366	0.3693	PASS	0.0 ft	0.0	PASS	8.0 ft
+D+0.750Lr+0.750L	1.000	0.366	0.7173	PASS	0.0 ft	0.0	PASS	8.0 ft
+D+0.750L+0.750S	1.000	0.366	0.7173	PASS	0.0 ft	0.0	PASS	8.0 ft
+D+0.60W	1.000	0.366	0.3693	PASS	0.0 ft	0.0	PASS	8.0 ft
+D+0.70E	1.000	0.366	0.3693	PASS	0.0 ft	0.0	PASS	8.0 ft
+D+0.750Lr+0.750L+0.450W	1.000	0.366	0.7173	PASS	0.0 ft	0.0	PASS	8.0 ft

Whipple Consulting Engineers
2528 North Sullivan Road
Spokane Valley, WA 99216
509-893-2617

Wood Column

File = P:\WCE_WORK\2VVV8A~Q\20VTXW~F\DBJGBY~H\SEV10W~K\C7A4YC~F\2XGNHE~Z.EC6
ENERCALC, INC. 1983-2016, Build:6.16.6.7, Ver:6.16.6.7

Lic. # : KW-06009199 | Licensee : Whipple Consulting Engineers

Description : 2x4 Stud @ 16" O.C. - 1st Floor - Unit Interior Bearing

Load Combination Results

Load Combination	C_D	C_P	Maximum Axial + Bending Stress Ratios			Maximum Shear Ratios		
			Stress Ratio	Status	Location	Stress Ratio	Status	Location
+D+0.750L+0.750S+0.450W	1.000	0.366	0.7173	PASS	0.0 ft	0.0	PASS	8.0 ft
+D+0.750L+0.750S+0.5250E	1.000	0.366	0.7173	PASS	0.0 ft	0.0	PASS	8.0 ft
+0.60D+0.60W	1.000	0.366	0.2216	PASS	0.0 ft	0.0	PASS	8.0 ft
+0.60D+0.70E	1.000	0.366	0.2216	PASS	0.0 ft	0.0	PASS	8.0 ft

Maximum Deflections for Load Combinations

Load Combination	Max. X-X Deflection	Distance	Max. Y-Y Deflection	Distance
D Only	0.0000 in	0.000 ft	0.000 in	0.000 ft
+D+L	0.0000 in	0.000 ft	0.000 in	0.000 ft
+D+Lr	0.0000 in	0.000 ft	0.000 in	0.000 ft
+D+S	0.0000 in	0.000 ft	0.000 in	0.000 ft
+D+0.750Lr+0.750L	0.0000 in	0.000 ft	0.000 in	0.000 ft
+D+0.750L+0.750S	0.0000 in	0.000 ft	0.000 in	0.000 ft
+D+0.60W	0.0000 in	0.000 ft	0.000 in	0.000 ft
+D+0.70E	0.0000 in	0.000 ft	0.000 in	0.000 ft
+D+0.750Lr+0.750L+0.450W	0.0000 in	0.000 ft	0.000 in	0.000 ft
+D+0.750L+0.750S+0.450W	0.0000 in	0.000 ft	0.000 in	0.000 ft
+D+0.750L+0.750S+0.5250E	0.0000 in	0.000 ft	0.000 in	0.000 ft
+0.60D+0.60W	0.0000 in	0.000 ft	0.000 in	0.000 ft
+0.60D+0.70E	0.0000 in	0.000 ft	0.000 in	0.000 ft
D Only	0.0000 in	0.000 ft	0.000 in	0.000 ft
Lr Only	0.0000 in	0.000 ft	0.000 in	0.000 ft
L Only	0.0000 in	0.000 ft	0.000 in	0.000 ft
S Only	0.0000 in	0.000 ft	0.000 in	0.000 ft
W Only	0.0000 in	0.000 ft	0.000 in	0.000 ft
E Only	0.0000 in	0.000 ft	0.000 in	0.000 ft
H Only	0.0000 in	0.000 ft	0.000 in	0.000 ft

Whipple Consulting Engineers
2528 North Sullivan Road
Spokane Valley, WA 99216
509-893-2617

Wood Column

File = P:\WCE_WORK\2VVV8A~Q\20VTXW~F\DBJGBY~H\SEV10W~K\C7A4YC~F\2XGNHE~Z.EC6
ENERCALC, INC. 1983-2016, Build:6.16.6.7, Ver:6.16.6.7
Lic. # : KW-06009199
Licensee : Whipple Consulting Engineers

Description : 2x4 Bundled Studs - Unit A - 1st Floor - Entry Hall Way

Code References

Calculations per 2012 NDS, IBC 2012, CBC 2013, ASCE 7-10
Load Combinations Used : IBC 2012

General Information

Analysis Method : Allowable Stress Design
End Fixities Top & Bottom Pinned
Overall Column Height 8.0 ft
(Used for non-slender calculations)

Wood Species Douglas Fir - Larch
Wood Grade No.2

Fb - Tension	900.0 psi	Fv	180.0 psi
Fb - Compr	900.0 psi	Ft	575.0 psi
Fc - Prll	1,350.0 psi	Density	32.210 pcf
Fc - Perp	625.0 psi		

E : Modulus of Elasticity . . .	x-x Bending	y-y Bending	Axial
Basic	1,600.0	1,600.0	1,600.0 ksi
Minimum	580.0	580.0	

Wood Section Name **3-2x4**
Wood Grading/Manuf. Graded Lumber
Wood Member Type Sawn

Exact Width	**4.50**	in
Exact Depth	**3.50**	in
Area	15.750	in^2
Ix	16.078	in^4
Iy	26.578	in^4

Allow Stress Modification Factors

Cf or Cv for Bending	1.50
Cf or Cv for Compression	1.150
Cf or Cv for Tension	1.50
Cm : Wet Use Factor	1.0
Ct : Temperature Factor	1.0
Cfu : Flat Use Factor	1.0
Kf : Built-up columns	1.0 NDS 15.3.2
Use Cr : Repetitive ?	Yes

Brace condition for deflection (buckling) along columns :
X-X (width) axis : Fully braced against buckling along X-X Axis
Y-Y (depth) axis : Unbraced Length for X-X Axis buckling = 8.0 ft, K = 1.0

Applied Loads

Service loads entered. Load Factors will be applied for calculations.

Column self weight included : 28.184 lbs * Dead Load Factor
AXIAL LOADS . . .
3rd Floor - 11.5'x5' Trib - DL=25, LL=40: Axial Load at 8.0 ft, D = 1.437, L = 2.30 k
2nd Floor - 11.5'x5' Trib - DL=25, LL=40: Axial Load at 8.0 ft, D = 1.437, L = 2.30 k
Walls Above - 17' - DL=10: Axial Load at 8.0 ft, D = 0.2260 k

DESIGN SUMMARY

Bending & Shear Check Results

PASS Max. Axial+Bending Stress Ratio = **0.8637 : 1**
Load Combination +D+L
Governing NDS Forumla Comp Only, fc/Fc'
Location of max.above base 0.0 ft
At maximum location values are . . .
Applied Axial 7.728 k
Applied Mx 0.0 k-ft
Applied My 0.0 k-ft
Fc : Allowable 568.13 psi

PASS Maximum Shear Stress Ratio = **0.0 : 1**
Load Combination +0.60D+0.70E
Location of max.above base 8.0 ft
Applied Design Shear 0.0 psi
Allowable Shear 180.0 psi

Maximum SERVICE Lateral Load Reactions . .

Top along Y-Y	0.0 k	Bottom along Y-Y	0.0 k
Top along X-X	0.0 k	Bottom along X-X	0.0 k

Maximum SERVICE Load Lateral Deflections . . .
Along Y-Y 0.0 in at 0.0 ft above base
for load combination : n/a
Along X-X 0.0 in at 0.0 ft above base
for load combination : n/a

Other Factors used to calculate allowable stresses . . .

	Bending	Compression	Tension

Load Combination Results

Load Combination	C_D	C_P	Maximum Axial + Bending Stress Ratios: Stress Ratio	Status	Location	Maximum Shear Ratios: Stress Ratio	Status	Location
D Only	1.000	0.366	0.3496	PASS	0.0 ft	0.0	PASS	8.0 ft
+D+L	1.000	0.366	0.8637	PASS	0.0 ft	0.0	PASS	8.0 ft
+D+Lr	1.000	0.366	0.3496	PASS	0.0 ft	0.0	PASS	8.0 ft
+D+S	1.000	0.366	0.3496	PASS	0.0 ft	0.0	PASS	8.0 ft
+D+0.750Lr+0.750L	1.000	0.366	0.7351	PASS	0.0 ft	0.0	PASS	8.0 ft
+D+0.750L+0.750S	1.000	0.366	0.7351	PASS	0.0 ft	0.0	PASS	8.0 ft
+D+0.60W	1.000	0.366	0.3496	PASS	0.0 ft	0.0	PASS	8.0 ft
+D+0.70E	1.000	0.366	0.3496	PASS	0.0 ft	0.0	PASS	8.0 ft
+D+0.750Lr+0.750L+0.450W	1.000	0.366	0.7351	PASS	0.0 ft	0.0	PASS	8.0 ft

Whipple Consulting Engineers
2528 North Sullivan Road
Spokane Valley, WA 99216
509-893-2617

Wood Column

File = P:\WCE_WORK\2VVV8A~Q\20VTXW~F\DBJGBY~H\SEV10W~K\C7A4YC~F\2XGNHE~Z.EC6
ENERCALC, INC. 1983-2016, Build:6.16.6.7, Ver:6.16.6.7

Lic. # : KW-06009199 | Licensee : Whipple Consulting Engineers

Description : 2x4 Bundled Studs - Unit A - 1st Floor - Entry Hall Way

Load Combination Results

Load Combination	C_D	C_P	Maximum Axial + Bending Stress Ratios			Maximum Shear Ratios		
			Stress Ratio	Status	Location	Stress Ratio	Status	Location
+D+0.750L+0.750S+0.450W	1.000	0.366	0.7351	PASS	0.0 ft	0.0	PASS	8.0 ft
+D+0.750L+0.750S+0.5250E	1.000	0.366	0.7351	PASS	0.0 ft	0.0	PASS	8.0 ft
+0.60D+0.60W	1.000	0.366	0.2098	PASS	0.0 ft	0.0	PASS	8.0 ft
+0.60D+0.70E	1.000	0.366	0.2098	PASS	0.0 ft	0.0	PASS	8.0 ft

Maximum Deflections for Load Combinations

Load Combination	Max. X-X Deflection	Distance	Max. Y-Y Deflection	Distance
D Only	0.0000 in	0.000 ft	0.000 in	0.000 ft
+D+L	0.0000 in	0.000 ft	0.000 in	0.000 ft
+D+Lr	0.0000 in	0.000 ft	0.000 in	0.000 ft
+D+S	0.0000 in	0.000 ft	0.000 in	0.000 ft
+D+0.750Lr+0.750L	0.0000 in	0.000 ft	0.000 in	0.000 ft
+D+0.750L+0.750S	0.0000 in	0.000 ft	0.000 in	0.000 ft
+D+0.60W	0.0000 in	0.000 ft	0.000 in	0.000 ft
+D+0.70E	0.0000 in	0.000 ft	0.000 in	0.000 ft
+D+0.750Lr+0.750L+0.450W	0.0000 in	0.000 ft	0.000 in	0.000 ft
+D+0.750L+0.750S+0.450W	0.0000 in	0.000 ft	0.000 in	0.000 ft
+D+0.750L+0.750S+0.5250E	0.0000 in	0.000 ft	0.000 in	0.000 ft
+0.60D+0.60W	0.0000 in	0.000 ft	0.000 in	0.000 ft
+0.60D+0.70E	0.0000 in	0.000 ft	0.000 in	0.000 ft
D Only	0.0000 in	0.000 ft	0.000 in	0.000 ft
Lr Only	0.0000 in	0.000 ft	0.000 in	0.000 ft
L Only	0.0000 in	0.000 ft	0.000 in	0.000 ft
S Only	0.0000 in	0.000 ft	0.000 in	0.000 ft
W Only	0.0000 in	0.000 ft	0.000 in	0.000 ft
E Only	0.0000 in	0.000 ft	0.000 in	0.000 ft
H Only	0.0000 in	0.000 ft	0.000 in	0.000 ft

Whipple Consulting Engineers
2528 North Sullivan Road
Spokane Valley, WA 99216
509-893-2617

Wood Column

File = P:\WCE_WORK\2VVV8A~Q\20VTXW~F\DBJGBY~H\SEV10W~K\C7A4YC~F\2XGNHE~Z.EC6
ENERCALC, INC. 1983-2016, Build:6.16.6.7, Ver:6.16.6.7
Lic. # : KW-06009199
Licensee : Whipple Consulting Engineers

Description : Unit B - 3rd Floor Support @ B2

Code References

Calculations per 2012 NDS, IBC 2012, CBC 2013, ASCE 7-10
Load Combinations Used : IBC 2012

General Information

Analysis Method : Allowable Stress Design
End Fixities Top & Bottom Pinned
Overall Column Height 10.0 ft
(Used for non-slender calculations)

Wood Species Douglas Fir - Larch
Wood Grade No.2

Fb - Tension	900.0 psi	Fv	180.0 psi
Fb - Compr	900.0 psi	Ft	575.0 psi
Fc - Prll	1,350.0 psi	Density	32.210 pcf
Fc - Perp	625.0 psi		

E : Modulus of Elasticity . . .	x-x Bending	y-y Bending	Axial
Basic	1,600.0	1,600.0	1,600.0 ksi
Minimum	580.0	580.0	

Wood Section Name **2-2x6**
Wood Grading/Manuf. Graded Lumber
Wood Member Type Sawn

Exact Width	**3.0**	in
Exact Depth	**5.50**	in
Area	16.50	in^2
Ix	41.594	in^4
Iy	12.375	in^4

Allow Stress Modification Factors

Cf or Cv for Bending	1.30
Cf or Cv for Compression	1.10
Cf or Cv for Tension	1.30
Cm : Wet Use Factor	1.0
Ct : Temperature Factor	1.0
Cfu : Flat Use Factor	1.0
Kf : Built-up columns	1.0 *NDS 15.3.2*
Use Cr : Repetitive ?	Yes

Brace condition for deflection (buckling) along columns :
X-X (width) axis : Fully braced against buckling along X-X Axis
Y-Y (depth) axis : Unbraced Length for X-X Axis buckling = 10.0 ft, K = 1.0

Applied Loads

Service loads entered. Load Factors will be applied for calculations.

Column self weight included : 36.907 lbs * Dead Load Factor
AXIAL LOADS . . .
2nd Floor - 7' Trib - DL=25, LL=100: Axial Load at 10.0 ft, D = 1.010, L = 1.610 k

DESIGN SUMMARY

Bending & Shear Check Results

PASS Max. Axial+Bending Stress Ratio = **0.1992 : 1**

Load Combination	+D+L
Governing NDS Forumla	Comp Only, fc/Fc'
Location of max.above base	0.0 ft
At maximum location values are . . .	
Applied Axial	2.657 k
Applied Mx	0.0 k-ft
Applied My	0.0 k-ft
Fc : Allowable	808.37 psi

PASS Maximum Shear Stress Ratio = **0.0 : 1**

Load Combination	+0.60D+0.70E
Location of max.above base	10.0 ft
Applied Design Shear	0.0 psi
Allowable Shear	180.0 psi

Maximum SERVICE Lateral Load Reactions . .

Top along Y-Y	0.0 k	Bottom along Y-Y	0.0 k
Top along X-X	0.0 k	Bottom along X-X	0.0 k

Maximum SERVICE Load Lateral Deflections . . .

Along Y-Y 0.0 in at 0.0 ft above base
for load combination : n/a
Along X-X 0.0 in at 0.0 ft above base
for load combination : n/a

Other Factors used to calculate allowable stresses . . .

	Bending	Compression	Tension

Load Combination Results

Load Combination	C_D	C_P	Maximum Axial + Bending Stress Ratios: Stress Ratio	Status	Location	Maximum Shear Ratios: Stress Ratio	Status	Location
D Only	1.000	0.544	0.07849	PASS	0.0 ft	0.0	PASS	10.0 ft
+D+L	1.000	0.544	0.1992	PASS	0.0 ft	0.0	PASS	10.0 ft
+D+Lr	1.000	0.544	0.07849	PASS	0.0 ft	0.0	PASS	10.0 ft
+D+S	1.000	0.544	0.07849	PASS	0.0 ft	0.0	PASS	10.0 ft
+D+0.750Lr+0.750L	1.000	0.544	0.1690	PASS	0.0 ft	0.0	PASS	10.0 ft
+D+0.750L+0.750S	1.000	0.544	0.1690	PASS	0.0 ft	0.0	PASS	10.0 ft
+D+0.60W	1.000	0.544	0.07849	PASS	0.0 ft	0.0	PASS	10.0 ft
+D+0.70E	1.000	0.544	0.07849	PASS	0.0 ft	0.0	PASS	10.0 ft
+D+0.750Lr+0.750L+0.450W	1.000	0.544	0.1690	PASS	0.0 ft	0.0	PASS	10.0 ft
+D+0.750L+0.750S+0.450W	1.000	0.544	0.1690	PASS	0.0 ft	0.0	PASS	10.0 ft
+D+0.750L+0.750S+0.5250E	1.000	0.544	0.1690	PASS	0.0 ft	0.0	PASS	10.0 ft
+0.60D+0.60W	1.000	0.544	0.04709	PASS	0.0 ft	0.0	PASS	10.0 ft

Whipple Consulting Engineers
2528 North Sullivan Road
Spokane Valley, WA 99216
509-893-2617

Wood Column

Description : Unit B - 3rd Floor Support @ B2

Load Combination Results

Load Combination	C_D	C_P	Maximum Axial + Bending Stress Ratios			Maximum Shear Ratios		
			Stress Ratio	Status	Location	Stress Ratio	Status	Location
+0.60D+0.70E	1.000	0.544	0.04709	PASS	0.0 ft	0.0	PASS	10.0 ft

Maximum Deflections for Load Combinations

Load Combination	Max. X-X Deflection	Distance	Max. Y-Y Deflection	Distance
D Only	0.0000 in	0.000 ft	0.000 in	0.000 ft
+D+L	0.0000 in	0.000 ft	0.000 in	0.000 ft
+D+Lr	0.0000 in	0.000 ft	0.000 in	0.000 ft
+D+S	0.0000 in	0.000 ft	0.000 in	0.000 ft
+D+0.750Lr+0.750L	0.0000 in	0.000 ft	0.000 in	0.000 ft
+D+0.750L+0.750S	0.0000 in	0.000 ft	0.000 in	0.000 ft
+D+0.60W	0.0000 in	0.000 ft	0.000 in	0.000 ft
+D+0.70E	0.0000 in	0.000 ft	0.000 in	0.000 ft
+D+0.750Lr+0.750L+0.450W	0.0000 in	0.000 ft	0.000 in	0.000 ft
+D+0.750L+0.750S+0.450W	0.0000 in	0.000 ft	0.000 in	0.000 ft
+D+0.750L+0.750S+0.5250E	0.0000 in	0.000 ft	0.000 in	0.000 ft
+0.60D+0.60W	0.0000 in	0.000 ft	0.000 in	0.000 ft
+0.60D+0.70E	0.0000 in	0.000 ft	0.000 in	0.000 ft
D Only	0.0000 in	0.000 ft	0.000 in	0.000 ft
Lr Only	0.0000 in	0.000 ft	0.000 in	0.000 ft
L Only	0.0000 in	0.000 ft	0.000 in	0.000 ft
S Only	0.0000 in	0.000 ft	0.000 in	0.000 ft
W Only	0.0000 in	0.000 ft	0.000 in	0.000 ft
E Only	0.0000 in	0.000 ft	0.000 in	0.000 ft
H Only	0.0000 in	0.000 ft	0.000 in	0.000 ft

Whipple Consulting Engineers
2528 North Sullivan Road
Spokane Valley, WA 99216
509-893-2617

Wood Column

File = P:\WCE_WORK\2VVV8A~Q\20VTXW~F\DBJGBY~H\SEV10W~K\C7A4YC~F\2XGNHE~Z.EC6
ENERCALC, INC. 1983-2016, Build:6.16.6.7, Ver:6.16.6.7
Lic. # : KW-06009199
Licensee : Whipple Consulting Engineers

Description : Unit B - 2nd Floor Support @ B2

Code References

Calculations per 2012 NDS, IBC 2012, CBC 2013, ASCE 7-10
Load Combinations Used : IBC 2012

General Information

Analysis Method : Allowable Stress Design
End Fixities Top & Bottom Pinned
Overall Column Height 10.0 ft
(Used for non-slender calculations)

Wood Species Douglas Fir - Larch
Wood Grade No.2

Fb - Tension	900.0 psi	Fv	180.0 psi
Fb - Compr	900.0 psi	Ft	575.0 psi
Fc - Prll	1,350.0 psi	Density	32.210 pcf
Fc - Perp	625.0 psi		

E : Modulus of Elasticity . . .	x-x Bending	y-y Bending	Axial
Basic	1,600.0	1,600.0	1,600.0 ksi
Minimum	580.0	580.0	

Wood Section Name **3-2x4**
Wood Grading/Manuf. Graded Lumber
Wood Member Type Sawn

Exact Width	**4.50**	in
Exact Depth	**3.50**	in
Area	15.750	in^2
Ix	16.078	in^4
Iy	26.578	in^4

Allow Stress Modification Factors

Cf or Cv for Bending	1.50
Cf or Cv for Compression	1.150
Cf or Cv for Tension	1.50
Cm : Wet Use Factor	1.0
Ct : Temperature Factor	1.0
Cfu : Flat Use Factor	1.0
Kf : Built-up columns	1.0 NDS 15.3.2
Use Cr : Repetitive ?	Yes

Brace condition for deflection (buckling) along columns :
X-X (width) axis : Fully braced against buckling along X-X Axis
Y-Y (depth) axis : Unbraced Length for X-X Axis buckling = 10.0 ft, K = 1.0

Applied Loads

Service loads entered. Load Factors will be applied for calculations.

Column self weight included : 35.230 lbs * Dead Load Factor
AXIAL LOADS . . .
3rd Floor - End Reaction - B2: Axial Load at 10.0 ft, D = 1.010, L = 1.610 k
2nd Floor - End Reaction - B2: Axial Load at 10.0 ft, D = 1.010, L = 1.610 k

DESIGN SUMMARY

Bending & Shear Check Results

PASS Max. Axial+Bending Stress Ratio = **0.8795 : 1**

Load Combination	+D+L
Governing NDS Forumla	Comp Only, fc/Fc'
Location of max.above base	0.0 ft
At maximum location values are . . .	
Applied Axial	5.275 k
Applied Mx	0.0 k-ft
Applied My	0.0 k-ft
Fc : Allowable	380.822 psi

PASS Maximum Shear Stress Ratio = **0.0 : 1**

Load Combination	+0.60D+0.70E
Location of max.above base	10.0 ft
Applied Design Shear	0.0 psi
Allowable Shear	180.0 psi

Maximum SERVICE Lateral Load Reactions . .

Top along Y-Y	0.0 k	Bottom along Y-Y	0.0 k
Top along X-X	0.0 k	Bottom along X-X	0.0 k

Maximum SERVICE Load Lateral Deflections . . .

Along Y-Y 0.0 in at 0.0 ft above base
for load combination : n/a
Along X-X 0.0 in at 0.0 ft above base
for load combination : n/a

Other Factors used to calculate allowable stresses . . .

Bending	Compression	Tension

Load Combination Results

Load Combination	C_D	C_P	Maximum Axial + Bending Stress Ratios: Stress Ratio	Status	Location	Maximum Shear Ratios: Stress Ratio	Status	Location
D Only	1.000	0.245	0.3427	PASS	0.0 ft	0.0	PASS	10.0 ft
+D+L	1.000	0.245	0.8795	PASS	0.0 ft	0.0	PASS	10.0 ft
+D+Lr	1.000	0.245	0.3427	PASS	0.0 ft	0.0	PASS	10.0 ft
+D+S	1.000	0.245	0.3427	PASS	0.0 ft	0.0	PASS	10.0 ft
+D+0.750Lr+0.750L	1.000	0.245	0.7453	PASS	0.0 ft	0.0	PASS	10.0 ft
+D+0.750L+0.750S	1.000	0.245	0.7453	PASS	0.0 ft	0.0	PASS	10.0 ft
+D+0.60W	1.000	0.245	0.3427	PASS	0.0 ft	0.0	PASS	10.0 ft
+D+0.70E	1.000	0.245	0.3427	PASS	0.0 ft	0.0	PASS	10.0 ft
+D+0.750Lr+0.750L+0.450W	1.000	0.245	0.7453	PASS	0.0 ft	0.0	PASS	10.0 ft
+D+0.750L+0.750S+0.450W	1.000	0.245	0.7453	PASS	0.0 ft	0.0	PASS	10.0 ft
+D+0.750L+0.750S+0.5250E	1.000	0.245	0.7453	PASS	0.0 ft	0.0	PASS	10.0 ft

Whipple Consulting Engineers
2528 North Sullivan Road
Spokane Valley, WA 99216
509-893-2617

Wood Column

File = P:\WCE_WORK\2VVV8A~Q\20VTXW~F\DBJGBY~H\SEV10W~K\C7A4YC~F\2XGNHE~Z.EC6
ENERCALC, INC. 1983-2016, Build:6.16.6.7, Ver:6.16.6.7

Lic. # : KW-06009199 Licensee : Whipple Consulting Engineers

Description : Unit B - 2nd Floor Support @ B2

Load Combination Results

Load Combination	C_D	C_P	Maximum Axial + Bending Stress Ratios			Maximum Shear Ratios		
			Stress Ratio	Status	Location	Stress Ratio	Status	Location
+0.60D+0.60W	1.000	0.245	0.2056	PASS	0.0 ft	0.0	PASS	10.0 ft
+0.60D+0.70E	1.000	0.245	0.2056	PASS	0.0 ft	0.0	PASS	10.0 ft

Maximum Deflections for Load Combinations

Load Combination	Max. X-X Deflection	Distance	Max. Y-Y Deflection	Distance
D Only	0.0000 in	0.000 ft	0.000 in	0.000 ft
+D+L	0.0000 in	0.000 ft	0.000 in	0.000 ft
+D+Lr	0.0000 in	0.000 ft	0.000 in	0.000 ft
+D+S	0.0000 in	0.000 ft	0.000 in	0.000 ft
+D+0.750Lr+0.750L	0.0000 in	0.000 ft	0.000 in	0.000 ft
+D+0.750L+0.750S	0.0000 in	0.000 ft	0.000 in	0.000 ft
+D+0.60W	0.0000 in	0.000 ft	0.000 in	0.000 ft
+D+0.70E	0.0000 in	0.000 ft	0.000 in	0.000 ft
+D+0.750Lr+0.750L+0.450W	0.0000 in	0.000 ft	0.000 in	0.000 ft
+D+0.750L+0.750S+0.450W	0.0000 in	0.000 ft	0.000 in	0.000 ft
+D+0.750L+0.750S+0.5250E	0.0000 in	0.000 ft	0.000 in	0.000 ft
+0.60D+0.60W	0.0000 in	0.000 ft	0.000 in	0.000 ft
+0.60D+0.70E	0.0000 in	0.000 ft	0.000 in	0.000 ft
D Only	0.0000 in	0.000 ft	0.000 in	0.000 ft
Lr Only	0.0000 in	0.000 ft	0.000 in	0.000 ft
L Only	0.0000 in	0.000 ft	0.000 in	0.000 ft
S Only	0.0000 in	0.000 ft	0.000 in	0.000 ft
W Only	0.0000 in	0.000 ft	0.000 in	0.000 ft
E Only	0.0000 in	0.000 ft	0.000 in	0.000 ft
H Only	0.0000 in	0.000 ft	0.000 in	0.000 ft

Whipple Consulting Engineers
2528 North Sullivan Road
Spokane Valley, WA 99216
509-893-2617

Wood Column

File = P:\WCE_WORK\2VVV8A~Q\20VTXW~F\DBJGBY~H\SEV10W~K\C7A4YC~F\2XGNHE~Z.EC6
ENERCALC, INC. 1983-2016, Build:6.16.6.7, Ver:6.16.6.7
Lic. # : KW-06009199
Licensee : Whipple Consulting Engineers

Description : Unit B - 2nd Floor Support @ B2

Code References

Calculations per 2012 NDS, IBC 2012, CBC 2013, ASCE 7-10
Load Combinations Used : IBC 2012

General Information

Analysis Method : Allowable Stress Design
End Fixities Top & Bottom Pinned
Overall Column Height 10.0 ft
(Used for non-slender calculations)

Wood Species Douglas Fir - Larch
Wood Grade No.2

Fb - Tension	900.0 psi	Fv	180.0 psi
Fb - Compr	900.0 psi	Ft	575.0 psi
Fc - Prll	1,350.0 psi	Density	32.210 pcf
Fc - Perp	625.0 psi		

E : Modulus of Elasticity . . .	x-x Bending	y-y Bending	Axial
Basic	1,600.0	1,600.0	1,600.0 ksi
Minimum	580.0	580.0	

Wood Section Name **2-2x6**
Wood Grading/Manuf. Graded Lumber
Wood Member Type Sawn

Exact Width	**3.0**	in
Exact Depth	**5.50**	in
Area	16.50	in^2
Ix	41.594	in^4
Iy	12.375	in^4

Allow Stress Modification Factors

Cf or Cv for Bending	1.30
Cf or Cv for Compression	1.10
Cf or Cv for Tension	1.30
Cm : Wet Use Factor	1.0
Ct : Temperature Factor	1.0
Cfu : Flat Use Factor	1.0
Kf : Built-up columns	1.0 NDS 15.3.2
Use Cr : Repetitive ?	Yes

Brace condition for deflection (buckling) along columns :
X-X (width) axis : Fully braced against buckling along X-X Axis
Y-Y (depth) axis : Unbraced Length for X-X Axis buckling = 10.0 ft, K = 1.0

Applied Loads

Service loads entered. Load Factors will be applied for calculations.

Column self weight included : 36.907 lbs * Dead Load Factor
AXIAL LOADS . . .
3rd Floor - End Reaction - B2: Axial Load at 10.0 ft, D = 1.010, L = 1.610 k
2nd Floor - End Reaction - B2: Axial Load at 10.0 ft, D = 1.010, L = 1.610 k

DESIGN SUMMARY

Bending & Shear Check Results

PASS Max. Axial+Bending Stress Ratio = **0.3956 : 1**

Load Combination	+D+L
Governing NDS Forumla	Comp Only, fc/Fc'
Location of max.above base	0.0 ft
At maximum location values are . . .	
Applied Axial	5.277 k
Applied Mx	0.0 k-ft
Applied My	0.0 k-ft
Fc : Allowable	808.37 psi

PASS Maximum Shear Stress Ratio = **0.0 : 1**

Load Combination	+0.60D+0.70E
Location of max.above base	10.0 ft
Applied Design Shear	0.0 psi
Allowable Shear	180.0 psi

Maximum SERVICE Lateral Load Reactions . .

Top along Y-Y	0.0 k	Bottom along Y-Y	0.0 k
Top along X-X	0.0 k	Bottom along X-X	0.0 k

Maximum SERVICE Load Lateral Deflections . . .

Along Y-Y 0.0 in at 0.0 ft above base
for load combination : n/a
Along X-X 0.0 in at 0.0 ft above base
for load combination : n/a

Other Factors used to calculate allowable stresses . . .

	Bending	Compression	Tension

Load Combination Results

Load Combination	C_D	C_P	Maximum Axial + Bending Stress Ratios: Stress Ratio	Status	Location	Maximum Shear Ratios: Stress Ratio	Status	Location
D Only	1.000	0.544	0.1542	PASS	0.0 ft	0.0	PASS	10.0 ft
+D+L	1.000	0.544	0.3956	PASS	0.0 ft	0.0	PASS	10.0 ft
+D+Lr	1.000	0.544	0.1542	PASS	0.0 ft	0.0	PASS	10.0 ft
+D+S	1.000	0.544	0.1542	PASS	0.0 ft	0.0	PASS	10.0 ft
+D+0.750Lr+0.750L	1.000	0.544	0.3353	PASS	0.0 ft	0.0	PASS	10.0 ft
+D+0.750L+0.750S	1.000	0.544	0.3353	PASS	0.0 ft	0.0	PASS	10.0 ft
+D+0.60W	1.000	0.544	0.1542	PASS	0.0 ft	0.0	PASS	10.0 ft
+D+0.70E	1.000	0.544	0.1542	PASS	0.0 ft	0.0	PASS	10.0 ft
+D+0.750Lr+0.750L+0.450W	1.000	0.544	0.3353	PASS	0.0 ft	0.0	PASS	10.0 ft
+D+0.750L+0.750S+0.450W	1.000	0.544	0.3353	PASS	0.0 ft	0.0	PASS	10.0 ft
+D+0.750L+0.750S+0.5250E	1.000	0.544	0.3353	PASS	0.0 ft	0.0	PASS	10.0 ft

Whipple Consulting Engineers
2528 North Sullivan Road
Spokane Valley, WA 99216
509-893-2617

Wood Column

File = P:\WCE_WORK\2VVV8A~Q\20VTXW~F\DBJGBY~H\SEV10W~K\C7A4YC~F\2XGNHE~Z.EC6
ENERCALC, INC. 1983-2016, Build:6.16.6.7, Ver:6.16.6.7

Lic. # : KW-06009199 Licensee : Whipple Consulting Engineers

Description : Unit B - 2nd Floor Support @ B2

Load Combination Results

Load Combination	C_D	C_P	Maximum Axial + Bending Stress Ratios			Maximum Shear Ratios		
			Stress Ratio	Status	Location	Stress Ratio	Status	Location
+0.60D+0.60W	1.000	0.544	0.09253	PASS	0.0 ft	0.0	PASS	10.0 ft
+0.60D+0.70E	1.000	0.544	0.09253	PASS	0.0 ft	0.0	PASS	10.0 ft

Maximum Deflections for Load Combinations

Load Combination	Max. X-X Deflection	Distance	Max. Y-Y Deflection	Distance
D Only	0.0000 in	0.000 ft	0.000 in	0.000 ft
+D+L	0.0000 in	0.000 ft	0.000 in	0.000 ft
+D+Lr	0.0000 in	0.000 ft	0.000 in	0.000 ft
+D+S	0.0000 in	0.000 ft	0.000 in	0.000 ft
+D+0.750Lr+0.750L	0.0000 in	0.000 ft	0.000 in	0.000 ft
+D+0.750L+0.750S	0.0000 in	0.000 ft	0.000 in	0.000 ft
+D+0.60W	0.0000 in	0.000 ft	0.000 in	0.000 ft
+D+0.70E	0.0000 in	0.000 ft	0.000 in	0.000 ft
+D+0.750Lr+0.750L+0.450W	0.0000 in	0.000 ft	0.000 in	0.000 ft
+D+0.750L+0.750S+0.450W	0.0000 in	0.000 ft	0.000 in	0.000 ft
+D+0.750L+0.750S+0.5250E	0.0000 in	0.000 ft	0.000 in	0.000 ft
+0.60D+0.60W	0.0000 in	0.000 ft	0.000 in	0.000 ft
+0.60D+0.70E	0.0000 in	0.000 ft	0.000 in	0.000 ft
D Only	0.0000 in	0.000 ft	0.000 in	0.000 ft
Lr Only	0.0000 in	0.000 ft	0.000 in	0.000 ft
L Only	0.0000 in	0.000 ft	0.000 in	0.000 ft
S Only	0.0000 in	0.000 ft	0.000 in	0.000 ft
W Only	0.0000 in	0.000 ft	0.000 in	0.000 ft
E Only	0.0000 in	0.000 ft	0.000 in	0.000 ft
H Only	0.0000 in	0.000 ft	0.000 in	0.000 ft

FOOTINGS

Whipple Consulting Engineers
2528 North Sullivan Road
Spokane Valley, WA 99216
509-893-2617

General Footing

File = P:\WCE_WORK\2VVV8A~Q\20VTXW~F\DBJGBY~H\SEV10W~K\C7A4YC~F\2XGNHE~Z.EC6
ENERCALC, INC. 1983-2016, Build:6.16.6.7, Ver:6.16.6.7
Lic. # : KW-06009199
Licensee : Whipple Consulting Engineers

Description : Spread Ftg @ Unit A Entry Hall Way

Code References

Calculations per ACI 318-11, IBC 2012, CBC 2013, ASCE 7-10
Load Combinations Used : IBC 2012

General Information

Material Properties

f'c : Concrete 28 day strength	=	3.0	ksi
fy : Rebar Yield	=	60.0	ksi
Ec : Concrete Elastic Modulus	=	3,122.0	ksi
Concrete Density	=	145.0	pcf
φ Values Flexure	=	0.90	
Shear	=	0.750	

Analysis Settings

Min Steel % Bending Reinf.	=	
Min Allow % Temp Reinf.	=	0.00180
Min. Overturning Safety Factor	=	1.0 : 1
Min. Sliding Safety Factor	=	1.0 : 1
Add Ftg Wt for Soil Pressure	:	No
Use ftg wt for stability, moments & shears	:	Yes
Add Pedestal Wt for Soil Pressure	:	No
Use Pedestal wt for stability, mom & shear	:	No

Soil Design Values

Allowable Soil Bearing	=	1.50	ksf
Increase Bearing By Footing Weight	=	No	
Soil Passive Resistance (for Sliding)	=	250.0	pcf
Soil/Concrete Friction Coeff.	=	0.30	

Increases based on footing Depth

Footing base depth below soil surface	=	2.0	ft
Allow press. increase per foot of depth	=		ksf
when footing base is below	=		ft

Increases based on footing plan dimension

Allowable pressure increase per foot of depth	=		ksf
when max. length or width is greater than	=		ft

Dimensions

Width parallel to X-X Axis	=	2.333	ft
Length parallel to Z-Z Axis	=	2.333	ft
Footing Thickness	=	10.0	in

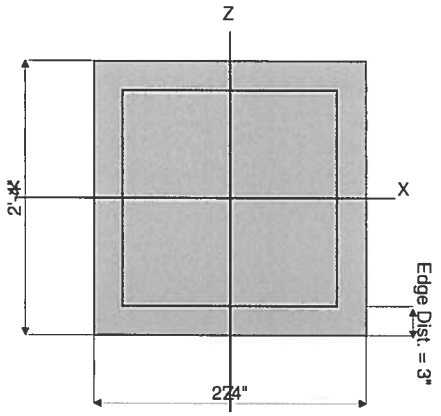

Pedestal dimensions...

px : parallel to X-X Axis	=		in
pz : parallel to Z-Z Axis	=		in
Height	=		in

Rebar Centerline to Edge of Concrete...

at Bottom of footing	=	3.0	in

Reinforcing

Bars parallel to X-X Axis			
Number of Bars	=		3.0
Reinforcing Bar Size	=	#	4
Bars parallel to Z-Z Axis			
Number of Bars	=		3.0
Reinforcing Bar Size	=	#	4

Bandwidth Distribution Check (ACI 15.4.4.2)

Direction Requiring Closer Separation	n/a
# Bars required within zone	n/a
# Bars required on each side of zone	n/a

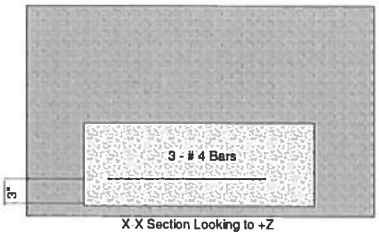

X X Section Looking to +Z

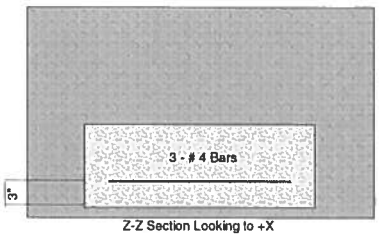

Z-Z Section Looking to +X

Applied Loads

		D	Lr	L	S	W	E	H	
P : Column Load	=	3.128		4.60					k
OB : Overburden	=								ksf
M-xx	=								k-ft
M-zz	=								k-ft
V-x	=								k
V-z	=								k

Whipple Consulting Engineers
2528 North Sullivan Road
Spokane Valley, WA 99216
509-893-2617

General Footing

File = P:\WCE_WORK\2VVV8A~Q\20VTXW~F\DBJGBY~H\SEV10W~K\C7A4YC~F\2XGNHE~Z.EC6
ENERCALC, INC. 1983-2016, Build:6.16.6.7, Ver:6.16.6.7
Lic. # : KW-06009199
Licensee : Whipple Consulting Engineers

Description : Spread Ftg @ Unit A Entry Hall Way

DESIGN SUMMARY

Design OK

	Min. Ratio	Item	Applied	Capacity	Governing Load Combination
PASS	0.9467	Soil Bearing	1.420 ksf	1.50 ksf	+D+L+H about Z-Z axis
PASS	n/a	Overturning - X-X	0.0 k-ft	0.0 k-ft	No Overturning
PASS	n/a	Overturning - Z-Z	0.0 k-ft	0.0 k-ft	No Overturning
PASS	n/a	Sliding - X-X	0.0 k	0.0 k	No Sliding
PASS	n/a	Sliding - Z-Z	0.0 k	0.0 k	No Sliding
PASS	n/a	Uplift	0.0 k	0.0 k	No Uplift
PASS	0.1779	Z Flexure (+X)	1.389 k-ft	7.809 k-ft	+1.20D+1.60L+0.50S+1.60H
PASS	0.1779	Z Flexure (-X)	1.389 k-ft	7.809 k-ft	+1.20D+1.60L+0.50S+1.60H
PASS	0.1779	X Flexure (+Z)	1.389 k-ft	7.809 k-ft	+1.20D+1.60L+0.50S+1.60H
PASS	0.1779	X Flexure (-Z)	1.389 k-ft	7.809 k-ft	+1.20D+1.60L+0.50S+1.60H
PASS	0.1726	1-way Shear (+X)	14.178 psi	82.158 psi	+1.20D+0.50Lr+1.60L+1.60H
PASS	0.1726	1-way Shear (-X)	14.178 psi	82.158 psi	+1.20D+0.50Lr+1.60L+1.60H
PASS	0.1726	1-way Shear (+Z)	14.178 psi	82.158 psi	+1.20D+0.50Lr+1.60L+1.60H
PASS	0.1726	1-way Shear (-Z)	14.178 psi	82.158 psi	+1.20D+0.50Lr+1.60L+1.60H
PASS	0.3205	2-way Punching	52.670 psi	164.317 psi	+1.20D+0.50Lr+1.60L+1.60H

Detailed Results

Soil Bearing

Rotation Axis & Load Combination...	Gross Allowable	Xecc (in)	Zecc (in)	Actual Soil Bearing Stress @ Location Bottom, -Z	Top, +Z	Left, -X	Right, +X	Actual / Allow Ratio
X-X. +D+H	1.50	n/a	0.0	0.5747	0.5747	n/a	n/a	0.383
X-X. +D+L+H	1.50	n/a	0.0	1.420	1.420	n/a	n/a	0.947
X-X. +D+Lr+H	1.50	n/a	0.0	0.5747	0.5747	n/a	n/a	0.383
X-X. +D+S+H	1.50	n/a	0.0	0.5747	0.5747	n/a	n/a	0.383
X-X. +D+0.750Lr+0.750L+H	1.50	n/a	0.0	1.209	1.209	n/a	n/a	0.806
X-X. +D+0.750L+0.750S+H	1.50	n/a	0.0	1.209	1.209	n/a	n/a	0.806
X-X. +D+0.60W+H	1.50	n/a	0.0	0.5747	0.5747	n/a	n/a	0.383
X-X. +D+0.70E+H	1.50	n/a	0.0	0.5747	0.5747	n/a	n/a	0.383
X-X. +D+0.750Lr+0.750L+0.450W+H	1.50	n/a	0.0	1.209	1.209	n/a	n/a	0.806
X-X. +D+0.750L+0.750S+0.450W+H	1.50	n/a	0.0	1.209	1.209	n/a	n/a	0.806
X-X. +D+0.750L+0.750S+0.5250E+H	1.50	n/a	0.0	1.209	1.209	n/a	n/a	0.806
X-X. +0.60D+0.60W+0.60H	1.50	n/a	0.0	0.3448	0.3448	n/a	n/a	0.230
X-X. +0.60D+0.70E+0.60H	1.50	n/a	0.0	0.3448	0.3448	n/a	n/a	0.230
X-X. D Only	1.50	n/a	0.0	0.5747	0.5747	n/a	n/a	0.383
X-X. Lr Only	1.50	n/a	0.0	0.0	0.0	n/a	n/a	0.000
X-X. L Only	1.50	n/a	0.0	0.8451	0.8451	n/a	n/a	0.563
X-X. S Only	1.50	n/a	0.0	0.0	0.0	n/a	n/a	0.000
X-X. W Only	1.50	n/a	0.0	0.0	0.0	n/a	n/a	0.000
X-X. E Only	1.50	n/a	0.0	0.0	0.0	n/a	n/a	0.000
X-X. H Only	1.50	n/a	0.0	0.0	0.0	n/a	n/a	0.000
Z-Z. +D+H	1.50	0.0	n/a	n/a	n/a	0.5747	0.5747	0.383
Z-Z. +D+L+H	1.50	0.0	n/a	n/a	n/a	1.420	1.420	0.947
Z-Z. +D+Lr+H	1.50	0.0	n/a	n/a	n/a	0.5747	0.5747	0.383
Z-Z. +D+S+H	1.50	0.0	n/a	n/a	n/a	0.5747	0.5747	0.383
Z-Z. +D+0.750Lr+0.750L+H	1.50	0.0	n/a	n/a	n/a	1.209	1.209	0.806
Z-Z. +D+0.750L+0.750S+H	1.50	0.0	n/a	n/a	n/a	1.209	1.209	0.806
Z-Z. +D+0.60W+H	1.50	0.0	n/a	n/a	n/a	0.5747	0.5747	0.383
Z-Z. +D+0.70E+H	1.50	0.0	n/a	n/a	n/a	0.5747	0.5747	0.383
Z-Z. +D+0.750Lr+0.750L+0.450W+H	1.50	0.0	n/a	n/a	n/a	1.209	1.209	0.806
Z-Z. +D+0.750L+0.750S+0.450W+H	1.50	0.0	n/a	n/a	n/a	1.209	1.209	0.806
Z-Z. +D+0.750L+0.750S+0.5250E+H	1.50	0.0	n/a	n/a	n/a	1.209	1.209	0.806
Z-Z. +0.60D+0.60W+0.60H	1.50	0.0	n/a	n/a	n/a	0.3448	0.3448	0.230
Z-Z. +0.60D+0.70E+0.60H	1.50	0.0	n/a	n/a	n/a	0.3448	0.3448	0.230
Z-Z. D Only	1.50	0.0	n/a	n/a	n/a	0.5747	0.5747	0.383
Z-Z. Lr Only	1.50	0.0	n/a	n/a	n/a	0.0	0.0	0.000
Z-Z. L Only	1.50	0.0	n/a	n/a	n/a	0.8451	0.8451	0.563
Z-Z. S Only	1.50	0.0	n/a	n/a	n/a	0.0	0.0	0.000
Z-Z. W Only	1.50	0.0	n/a	n/a	n/a	0.0	0.0	0.000
Z-Z. E Only	1.50	0.0	n/a	n/a	n/a	0.0	0.0	0.000
Z-Z. H Only	1.50	0.0	n/a	n/a	n/a	0.0	0.0	0.000

SPREAD FTG @ UNIT A ENTRY HALLWAY

TOTAL LOAD FROM COLUMN CALC. (SEE 2X4 BUNDLED STUDS PRINT OUT)

T.L = 7228#

ASSUMED SOIL BEARING: 1500 PSF

{D.L. = 3,128 #
L.L. = 4,600 #}

$\frac{7228\#}{1500 PSF} = 5.152$ SF → 2.27' x 2.27'

USE 10" DP x 2'-4" SQ FTG

MIN A_s = 10" x 28" x 0.0018
= 0.504

REINF. = (3) #4 BAR E.W.

WCE Whipple Consulting Engineers, Inc.
Civil and Transportation Engineering
2528 N. Sullivan Rd. • Spokane Valley, WA 99216
Phone 509-893-2617 • Fax 509-926-0227

NAME OF PROJECT			SHEET NUMBER OF
COMPUTED BY	CHECKED BY	JOB NUMBER	DATE