LEGACY VILLAS

LIBERTY LAKE, WASHINGTON

PROJECT INFORMATION

Site Address:

TBD COUNTRY VISTA DRIVE

Code Compliance

2012 International Building Code (IBC)
2012 International Energy Conservation Code (IECC)
2012 International Fire Code (IFC)
2012 International Mechanical Code (IMC)
2012 International Plumbing Code (IPC)
2012 International Fuel Gas Code (IFGC)
2009 ICC/ANSI 117.1

Parcel Number:

55156.9202

Height and Number of Stories:

ACTUAL : 33'6" HIGH; 2 STORIES
ALLOWABLE HEIGHT: 40' HIGH: 3 STORIES

Type of Construction:

V-B SPRINKLERED NFPA 13R

Occupancy Classification:

MULTI-FAMILY RESIDENTIAL

ZONING _____ M-2
BUILDING USE _____ (MULTI-FAMILY) R-2 OCCUPANCY
SITE AREA _____ (15.92 ACRES) _____ 693,766 S.F.

DRAWING INDEX

		CONST. SET DATE	SUBMITTAL DATE	REVISION DATE	REVISION DATE
	ARCHITECTURAL		6/20/2016		
A0.1	TITLE SHEET/ GENERAL NOTES				
A0.2	PROJECT INFORMATION & ADA/GENERAL NOTES				
A0.3	CODE SHEET				
A1.0	SITE PLAN				
A2.0	12-PLEX MAIN FLOOR PLAN				
A2.1	12-PLEX 2ND FLOOR PLAN & SCHEDULES				
A2.2	ELEVATION AND WINDOW SHEDULE				
A2.3	ELEVATIONS				
A2.4	ROOF PLAN				
A2.5	WALL SECTIONS				
A2.6	DETAILS				
A2.7	STAIR DETAILS				
A2.8	WALL DETAILS				
A3.0	1/4" MAIN FLOOR PLAN				
A3.1	1/4" MAIN FLOOR PLAN				
A3.2	1/4" 2ND FLOOR PLAN				
A3.3	1/4" 2ND FLOOR PLAN				
	STRUCTURAL				
S1.1	STRUCTURAL GENERAL NOTES				
S1.2	STRUCTURAL GENERAL NOTES				
S1.3	TYPICAL STRUCTURAL DETAILS				
S1.4	TYPICAL STRUCTURAL DETAILS				
S1.5	TYPICAL STRUCTURAL DETAILS				
S2.1	FOUNDATION AND MAIN FLOOR FRAMING PLAN				
S2.2	SECOND FLOOR FRAMING AND SHEAR PLAN				
S2.3	ROOF FRAMING PLAN				
S3.1	FOUNDATION DETAILS				
S4.1	FLOOR FRAMING DETAILS				
S4.2	FLOOR FRAMING DETAILS				
S5.1	ROOF FRAMING DETAILS				

ARCHITECTURAL ABBREVIATIONS

&	And	D.F.	Drinking Fountain	FURR.	Furring	N.	North	SECT.	Section
L	Angle	DET.	Detail	FUT.	Future	N.I.C.	Not In Contract	SH.	Shelf
@	At	DIA.	Diameter	GA.	Gauge	NO.or#	Number	SHR.	Shower
℄	Centerline	DIM.	Dimension	GALV.	Galvanized	NOM.	Nominal	SHT.	Sheet
ϕ	Diameter or Round	DISP.	Dispenser	G.B.	Grab Bar	N.T.S.	Not To Scale	SHW	Single Hung Window
⊥	Perpendicular	DN.	Down	GL.	Glass			SIM.	Similar
#	Pound or Number	D.O.	Door Opening	GND.	Ground	O.A.	Overall	S.N.D.	Sanitary Napkin Dispenser
(E)	Existing	DR.	Door	GR.	Grade	OBS.	Obscure	S.N.R.	Sanitary Napkin Receptacle
		DWR.	Drawer	GYP.	Gypsum	O.C.	On Center	SPEC.	Specification
ACOUS.	Acoustical	DS.	Downspout			O.D.	Outside Diameter (Dim.)	SQ.	Square
A.D.	Area Drain	D.S.P.	Dry Standpipe	H.B.	Hose Bibb	OFF.	Office	SST.	Stainless Steel
ADJ.	Adjustable	DWG.	Drawing	H.C.	Hollow Core	OPNG.	Opening	S.S.K.	Service Sink
AGGR.	Aggregate			HDWD.	Hardwood	OPP.	Opposite	STA.	Station
AL.	Aluminum	E.	East	HDWE.	Hardware			STD.	Standard
APPROX.	Approximate	EA.	Each	H.M.	Hollow Metal	PRCST.	Pre-cast	STL.	Steel
ARCH.	Architectural	E.J.	Expansion Joint	HORIZ.	Horizontal	PL.	Plate	STOR.	Storage
ASB.	Asbestos	EL.	Elevation	HR.	Hour	P. LAM.	Plastic Laminate	STRL.	Structural
ASPH.	Asphalt	ELEC.	Electrical	HGT.	Height	PLAS.	Plaster	SUSP.	Suspended
		ELEV.	Elevator			PLYWD.	Plywood	SYM.	Symmetrical
BD.	Board	EMER.	Emergency	I.D.	Inside Diameter	PR.	Pair		
BITUM.	Bituminous	ENCL.	Enclosure	INSUL.	Insulation	PT.	Point	TRD.	Tread
BLDG.	Building	E.P.	Electrical Panelboard	INT.	Interior	P.T.D.	Paper Towel Dispenser	T.B.	Towel Bar
BLK.	Block	EQ.	Equal			P.T.D/R	Combination Paper Towel	T.C.	Top of Curb
BLKG.	Blocking	EQPT.	Equipment				Dispenser & Receptacle	TEL.	Telephone
BM.	Beam	E.W.C.	Electric Water Cooler	JAN.	Janitor	PTN.	Partition	TER.	Terrazzo
BOT.	Bottom	EXST.	Existing	JT.	Joint	P.T.R.	Paper Towel Receptacle	T.& G.	Tongue and Groove
		EXPO.	Exposed					THK.	Thick
CAB.	Cabinet	EXP.	Expansion	KIT.	Kitchen	Q.T.	Quarry Tile	T.P.	Top of Pavement
C.B.	Catch Basin	EXT.	Exterior					T.P.D.	Toilet Paper Dispenser
CEM.	Cement			LAB.	Laboratory	R.	Riser	T.V.	Television
CER.	Ceramic	F.A.	Fire Alarm	LAM.	Laminate	RAD.	Radius	T.W.	Top of Wall
C.I.	Cast Iron	F.B.	Flat Bar	LAV.	Lavatory	R.D.	Roof Drain	TYP.	Typical
CLG.	Ceiling	F.D.	Floor Drain	LKR.	Locker	REF.	Reference		
CLKG.	Calking	FDN.	Foundation	LT.	Light	REFR.	Refrigerator	UNF.	Unfinished
CLO.	Closet	F.E.	Fire Extinguisher			RGTR.	Register	U.O.N.	Unless Otherwise Noted
CLR.	Clear	F.E.C.	Fire Extinguisher Cab.	MAX.	Maximum	REINF.	Reinforced	UR.	Urinal
COL.	Column	F.H.C.	Fire Hose Cabinet	M.C.	Medicine Cabinet	REQ.	Required		
CONC.	Concrete	FIN.	Finish	MECH.	Mechanical	RESIL.	Resilient	VERT.	Vertical
CONN.	Connection	FL.	Floor	MEMB.	Membrane	RM.	Room	VEST.	Vestibule
CONSTR.	Construction	FLASH.	Flashing	MET.	Metal	R.O.	Rough Opening		
CONT.	Continuous	FLUOR.	Fluorescent	MFR.	Manufacturer	RWD.	Redwood	W.	West
CORR.	Corridor	F.O.C.	Face of Concrete	MH.	Manhole	R.W.L.	Rain Water Leader	W/	With
CTSK.	Countersunk	F.O.F.	Face of Finish	MIN.	Minimum			W.C.	Water Closet
CNTR.	Counter	F.O.S.	Face of Studs	MIR.	Mirror	S.	South	WD.	Wood
CTR.	Center	FPRF.	Fireproof	MISC.	Miscellaneous	S.C.	Solid Core	WDW	Window
		F.S.	Full Size	M.O.	Masonry Opening	S.C.D.	Seat Cover Dispenser	W/O	Without
DBL.	Double	FT.	Foot or Feet	MTD.	Mounted	SCHED.	Schedule	WP.	Waterproof
DEPT.	Department	FTG.	Footing	MUL.	Mullion	S.D.	Soap Dispenser	WSCT.	Wainscot
								WT.	Weight

SYMBOLS

- AA / 4 — BUILDING SECTION; SHT. ON WHICH SECTION OCCURS
- A / 3 — WALL SECTION; SHT. ON WHICH SECTION OCCURS
- 1 / 5 — TYPICAL DETAIL; SHT. ON WHICH DETAIL OCCURS
- 2 / A5 — INTERIOR ELEVATION(S); SHT. ON WHICH ELEV. OCCURS; ARROW INDICATE(S) DIRECTION SEEN FROM
- A / 1 — COLUMN LINE; ORIENT POINT OF HEXAGONS TO COLUMN LINE; LETTERS IN ONE DIRECTION; NUMBERS IN THE OTHER
- A — WINDOW TYPE
- 2.1 — FINISH COLOR
- X / 4 — EQUIPMENT TYPE; X=X-RAY, F=FOOD SERVICE, 4=EQUIPMENT GROUP
- 42.0 — GRID LINES; FOR SURVEYORS GRID; MODULE GRID, ETC.
- MATCH LINE; SHADED PORTION IS THE SIDE CONSIDERED
- 1 / 2 — DOOR SYMBOL; DOOR MARK; HARDWARE GROUP
- 3 — REVISION
- F — PARTITION WALL TYPE
- 98'-6" — TOP OF FOOTING
- 8 — FLAG NOTE
- WORK POINT, CONTROL POINT OR DATUM POINT
- ROOM IDENTIFICATION TYPE 1: OFFICE / 102 / 1A1 / 9-6; ROOM NAME; ROOM NO.; ROOM MATERIAL CODES; 1ST NO.-FLOOR/BASE; 2ND NO.-WALLS/WAINSCOT; 3RD NO.-CEILING; CEILING HEIGHT OTHER THAN TYPICAL
- ROOM IDENTIFICATION TYPE 2: OFFICE / 102; ROOM NAME; ROOM NUMBER
- EXISTING CONTOURS
- NEW CONTOURS
- S — SEWER LINE
- W — WATER LINE
- G — GAS LINE
- ℄ — CENTERLINE OF RIGHT-OF-WAY
- PROPERTY LINE
- O.P. — OVERHEAD POWER
- MH — MANHOLE
- CATCH BASIN
- FH — FIRE HYDRANT
- PP — POWER POLE
- x — x — FENCE
- T.W. 10.0 — TOP OF WALL
- T.C. 18.0 — TOP OF CURB
- T.P. 18.4 — TOP OF PAVEMENT
- 72.0 / 64.0 — NEW FINISH GRADE (45°) / EXISTING GRADE (HORZ.)
- X 33.1 — SPOT ELEVATION

CONSULTANTS

ARCHITECTURAL
WYATT ARCHITECTS AND ASSOCIATES P.S.
PO BOX 141713
SPOKANE VALLEY, WASHINGTON 99214
PHONE:(509)928-1860
CONTACT: LEE SCHWARTZENBURG

STRUCTURAL/ LANDSCAPE
WHIPPLE CONSULTING ENGINEERS
2528 N SULLIVAN ROAD
SPOKANE VALLEY, WA 99216
PHONE:(509)893-2617
CONTACT: TODD WHIPPLE

CIVIL
LAAKE CITY ENGINEERING
3909 N. Schreiber Way
Coeur d'Alene, Idaho 83815
PHONE:(208) 676-0230
CONTACT: DREW DITTMAN

MECHANICAL
KARTCHNER ENGINEERING
6814 E Jackson Ridge Ln,
GREENACRES, WASHINGTON 99016
PHONE:(509)922-0383
CONTACT: MARK KARTCHNER

OWNER/DEVELOPER
LEGACY VILLAS LLC
11808 E MANSFILED
SPOKANE VALLEY, WA 99016
PHONE:(208)640-0148
CONTACT: GREG GERVAIS

REVISIONS

PROPOSED 12-PLEX BUILDING FOR: LEGACY VILLAS
COUNRTY VISTA ROAD, LIBERTY LAKE, WA

WYATT ARCHITECTS AND ASSOCIATES
JAMES A. McARTHUR, A.I.A.
Project Manager:
Lee D. Schwartzenburg
Spokane Valley, WA 99214
Phone 509-928-1860
leerwyattarchitects.com
9220 South Garfield
Spokane, WA 99203
Phone 509-327-7949 / Fax 509-327-7999
jallenmcarthur@gmail.com

1934 REGISTERED ARCHITECT
JAMES A. McARTHUR, JR.
STATE OF WASHINGTON
6-20-2016

SHEET TITLE: TITLE SHEET
DRAWN BY: LJS
PROJECT: 15:26
DATE: 6/20/2016
SHEET NO. A0.1

CONTRACTOR SHALL VERIFY ALL EXISTING DIMENSIONS AND CONDITIONS BEFORE ORDERING MATERIALS OR BEGINNING WORK. REPORT ALL INCONSISTENCIES TO ARCHITECT PRIOR TO PROCEEDING WITH WORK. TYP.

ARCHITECTURAL GENERAL NOTES:

1. THE APPLICABLE BUILDING CODE IS THE 2012 INTERNATIONAL BUILDING CODE (2012 IBC). FOLLOWING ALL APPLICABLE CODES IS REQUIRED.
2. DO NOT SCALE DRAWINGS.
3. FIGURED DIMENSIONS TAKE PRECEDENCE OVER SCALED DRAWINGS. WHERE DISCREPANCIES OCCUR, THEY SHALL BE REPORTED TO ARCHITECT FOR RESOLUTION.
4. DETAILED DRAWINGS AND LARGER SCALE DRAWINGS TAKE PRECEDENCE OVER SMALLER SCALE DRAWINGS.
5. CONCRETE DIMENSIONS ARE GIVEN TO FACE OF CONCRETE AND TO THE FACE OF ROUGH OPENINGS.
6. PARTITION DIMENSIONS ARE GIVEN TO THE FACE OF STUD UNLESS OTHERWISE NOTED.
7. DOOR OPENING LOCATIONS ARE DIMENSIONED TO ROUGH OPENING OR CENTERLINE OF OPENING.
8. WHERE NO MATERIAL NOTES OCCUR, THE GRAPHIC MATERIAL INDICATION SHALL INDICATE MATERIAL TYPES AND ITEMS. SEE MATERIALS & SYMBOLS LIST ON THIS SHEET.
9. PROVIDE LANDINGS AND FLOOR LEVELS AT DOORS THAT COMPLY WITH THE 2012 IBC SECTION 1008.1.4, 1008.1.5 AND 1008.1.6
10. ALL NEW CONSTRUCTION TO COMPLY WITH ICC/ANSI A117.1 – 2009.
11. ALL MATERIALS SHALL BE INSTALLED IN ACCORDANCE WITH THE MANUFACTURER'S RECOMMENDATIONS AND SPECIFICATIONS.
12. EACH SUBCONTRACTOR SHALL VERIFY ALL EXISTING CONDITIONS AND DIMENSIONS FOR ACCURACY PRIOR TO COMMENCING WITH THE WORK. ANY DISCREPANCY SHALL BE BROUGHT TO THE ATTENTION OF THE ARCHITECT.
13. PENETRATIONS THROUGH RATED ASSEMBLIES SHALL BE FIRESTOPPED IN ACCORDANCE WITH 2012 IBC SECTION 712 AND 716.
14. THE DRAWINGS INDICATE LOCATION, DIMENSIONS, REFERENCE, AND TYPICAL DETAILS OF CONSTRUCTION. THE DRAWINGS DO NOT INDICATE EVERY CONDITION – WORK NOT PARTICULARLY DETAILED SHALL BE OF CONSTRUCTION SIMILAR TO PARTS THAT ARE DETAILED.
15. FIRE–RESISTIVE FLOOR–CEILING OR ROOF CEILING CONSTRUCTION SYSTEMS SHALL HAVE FIRE–RESISTANCE RATINGS SET FORTH IN 2006 IBC. PENETRATIONS IN FLOORS AND CEILINGS REQUIRING PROTECTED OPENINGS SHALL BE FIRE–STOPPED WITH ASSEMBLIES TESTED IN ACCORDANCE WITH ASTM E814.
16. THE INTERIOR NON–BEARING WALLS SHOULD BE SHOWN TO ALLOW ROOF TRUSS DEFLECTION WITHOUT LOADING THE WALL, SUCH AS USE OF SIMPSON STC CLIP OR EQUIVALENT.
17. PROVIDE FIRE EXTINGUISHER CABINETS AND FIRE EXTINGUISHERS AS REQUIRED BY THE 2012 INTERNATIONAL FIRE CODE. IF NEEDED
18. WOOD MEMBERS IN CONTACT WITH CONCRETE SHALL BE PRESSURE TREATED.
19. FIRE STOPPING SHALL BE PROVIDED IN THE FOLLOWING LOCATIONS:
    –IN CONCEALED SPACES OF STUD WALLS AND PARTITIONS, INCLUDING FURRED SPACES, AT THE CEILING AND FLOOR LEVELS AND AT 10 FOOT INTERVALS ALONG THE LENGTH OF THE WALL.
    –AT ALL INTERCONNECTIONS BETWEEN CONCEALED VERTICAL AND HORIZONTAL SPACES AS OCCUR AT SOFFITS, DROP CEILINGS AND COVE CEILINGS.
    –IN OPENINGS AROUND VENTS, PIPES, DUCTS, CHIMNEYS, FIREPLACES AND SIMILAR OPENINGS WHICH AFFORD A PASSAGE FOR FIRE AT CEILING AND FLOOR LEVELS, WITH NON–COMBUSTABLE MATERIALS.
20. AN ATTIC ACCESS OPENING NOT LESS THAN 20 INCHES BY 30 INCHES SHALL BE PROVIDED IN THE CEILING OF EACH SEPARATE DWELLING UNIT ON THE TOP FLOOR OF BUILDINGS WITH COMBUSTIBLE CEILING OR ROOF CONSTRUCTION. LOCATE TO PROVIDE 30" MIN. CLEAR HEADROOM IN THE ATTIC AT OR ABOVE THE ACCESS OPENING.
21. WHEN FIRE–RATED WALLS AND PARTITIONS REQUIRE PROTECTED OPENINGS, THE FOLLOWING PENETRATIONS INTO OR THROUGH SUCH CONSTRUCTION ARE PERMITTED:
    –COPPER OR FERROUS PIPES OR CONDUITS MAY PENETRATE THE WALLS OR PARTITION, PROVIDED FIRE STOPPING IS PROVIDED.
    –OPENINGS FOR STEEL ELECTRICAL OUTLET BOXES NOT EXCEEDING 16 SQUARE INCHES IN AREA, PROVIDED THE AREA OF SUCH OPENINGS DOES NOT AGGREGATE MORE THAN 100 SQUARE INCHES FOR ANY 100 SQUARE FOOT OF WALL OR PARTITION AREA. OUTLET BOXES ON OPPOSITE SIDES OF WALLS OR PARTITIONS SHALL BE SEPARATED BY A HORIZONTAL DISTANCE OF 24 INCHES.
22. ALL INSULATION MATERIALS INCLUDING FACING, SUCH AS VAPOR BARRIER OR BREATHER PAPERS INSTALLED WITHIN FLOOR–CEILING ASSEMBLIES, ROOF–CEILING ASSEMBLIES, WALLS, CRAWL SPACES OR ATTICS SHALL HAVE A FLAME SPREAD RATING NOT TO EXCEED 25 AND A SMOKE DENSITY NOT TO EXCEED 450.
23. FIELD VERIFY DIMENSIONS AND SIZE OF ALL FIXTURES/APPLIANCES PRIOR TO ORDERING, ERECTION AND INSTALLATION.
24. CONTRACTOR SHALL VERIFY ALL EXISTING DIMENSIONS AND CONDITIONS BEFORE ORDERING MATERIALS AND BEGINNING WORK. REPORT ALL INCONSISTENCIES TO ARCHITECT PRIOR TO PROCEEDING WITH CONSTRUCTION.

GENERAL NOTES

1. CONTRACTOR TO VERIFY ALL DIMENSIONS IN THE FIELD AND SHALL NOTIFY THE ARCHITECT OF ANY DISCREPANCIES. ALL WORK REQUIRING MEASURING SHALL BE DONE ACCORDING TO FIGURES ON DRAWINGS AND NOT SCALED FROM DRAWINGS. THE ARCHITECT WILL FURNISH ANY MISSING DIMENSIONS UPON REQUEST.
2. ALL WORK SHALL CONFORM TO PREVAILING CODES, ORDINANCES, AND REQUIREMENTS.
3. CONTRACTOR IS RESPONSIBLE TO OBTAIN ALL PERMITS AND INSPECTIONS REQUIRED FOR CONSTRUCTION, AND SHALL PAY ALL APPLICABLE FEES.
4. DIMENSIONS:
   A. DIMENSIONS ON DRAWINGS ARE TO FACE OF STUDS OR CENTER LINE OF COLUMNS TYPICALLY, UNLESS OTHERWISE NOTED.
   B. EXTERIOR DIMENSIONS ARE TO FACE OF STUDS.
   C. DOOR AND CASED OPENINGS WITHOUT LOCATION DIMENSIONS OR DETAILS ARE TO BE CENTERED BETWEEN ADJACENT WALLS. DOORS ADJACENT TO ONE WALL, BUT NOT DIMENSIONED, SHALL BE LOCATED WITH DOOR OPENING 3" FROM FACE OF ADJACENT WALL.
   D. VERIFY ALL DIMENSIONS AND CONDITIONS AND NOTIFY ARCHITECT OF ALL DISCREPANCIES PRIOR TO PROCEEDING WITH WORK.
5. CODES: ALL WORK SHALL CONFORM TO APPLICABLE BUILDING CODES, ORDINANCES AND LAWS HAVING JURISDICTION AT PROJECT SITE. NOTIFY ARCHITECT OF ALL CONFLICTS.
   ENEGY REQUIREMENTS SHALL COMPLY WITH THE 2012 WASHINGTON STATE ENERGY CODE PER TABLE R402.1.1.
6. DO NOT SCALE DRAWINGS: USE DIMENSIONS SHOWN ON DRAWINGS AND ACTUAL FIELD MEASUREMENTS. NOTIFY ARCHITECT OF DISCREPANCIES FOUND.
7. COORDINATION:
   A. REVIEW AND COORDINATE REQUIREMENTS OF THE DRAWINGS BEFORE BEGINNING INSTALLATION OF WORK. REPORT DISCREPANCIES DISCOVERED IN WRITING TO THE ARCHITECT. WORK INSTALLED AND FOUND IN CONFLICT WITH THE REQUIREMENTS INDICATED ON DRAWINGS SHALL BE CORRECTED BY THE CONTRACTOR.
   B. VERIFY THAT UTILITY REQUIREMENTS CHARACTERISTICS OF OPERATING EQUIPMENT ARE COMPATIBLE WITH BUILDING UTILITIES. COORDINATE WORK OF VARIOUS CONSTRUCTION TRADES HAVING INTERDEPENDENT RESPONSIBILITIES FOR INSTALLING, CONNECTING TO, AND PLACING IN SERVICE OF SUCH EQUIPMENT.
   C. COORDINATE SPACE REQUIREMENTS AND INSTALLATION OF MECHANICAL AND ELECTRICAL WORK INDICATED ON DRAWINGS. VERIFY LOCATION AND REQUIRED OPENING SIZES FOR MECHANICAL EQUIPMENT, LOCATION AND SIZES OF EQUIPMENT FOR PADS AND BASES, AND REQUIREMENT AND LOCATION OF POWER AND WATER OR DRAIN INSTALLATION WITH EQUIPMENT MANUFACTURERS BEFORE PROCEEDING WITH THE WORK.
   D. COMPLY WITH INSTALLATION REQUIREMENTS OF MANUFACTURER'S INSTRUCTIONS AND APPROVED SHOP DRAWINGS.
   E. THE CONTRACTOR SHALL PROVIDE RADON MITIGATION IN ALL APARTMENT BUILDINGS.

WATER CLOSETS

SEE 2012 IBC CHAPTER 11 ACCESSIBILITY

(a) Back Wall (b) Side Wall

LAVATORIES, SINKS and MIRRORS

SEE 2012 IBC CHAPTER 11 ACCESSIBILITY

Clear Floor Space at Lavatories Lavatory Clearances

BATHTUBS

SEE 2012 IBC CHAPTER 11 ACCESSIBILITY

PROVIDE BLOCKING FOR GRAB BARS AT ALL WATER CLOSETS AND TUB/SHOWERS IN ALL GROUND FLOOR UNITS.

UNOBSTRUCTED REACH

SEE ANSI A117.1–2009, SECTION 308

OBSTRUCTED HIGH FORWARD REACH

SEE ANSI A117.1–2009, SECTION 308

OBSTRUCTED HIGH SIDE REACH

SEE ANSI A117.1–2009, SECTION 308

NOTE: (TYPICAL IN ALL TYPE 'A' ACCESSIBLE UNITS) REQUIRE 34" COUNTER HEIGHTS, FROM TOP OF SINK RIM TO FINISH FLOOR, 30" OF COUNTER SHALL BE DEDICATED TO WORKING SURFACES WITH KNEE SPACE IN THE KITCHEN.

STAIR

SEE 2012 IBC CHAPTER 11 ACCESSIBILITY

BALLASTERS OF HANDRAILS SHALL BE LESS THAN 4" APART FROM FACE TO FACE.

(a) Plan

A=11" MAX
B=7" MAX
X= 12"
Y=12"

(b) Elevation of Center Handrail

Fig. 19 Stair Handrails

(c) Extentsion at Bottom of Run (d) Extension at Top of Run

GRAB BARS and HANDRAILS

SEE 2012 IBC CHAPTER 11 ACCESSIBILITY

(a) Handrail (b) Handrail (c) Handrail (d) Handrail (e) Grab Bar

GENERAL ACCESSIBILITY NOTES

-ALL BUILDINGS SHALL COMPLY WITH INTERNATIONAL BUILDING CODE 2012 AND ANISI 117.1-2009.

-PROVIDE THE REQUIRED 5% OF TYPE 'A' ACCESSIBLE UNITS OF THE TOTAL UNITS ON SITE. ALL OTHER GROUND FLOOR UNITS SHALL BE TYPE 'B'.

-PROVIDE A MANUAL FIRE ALARM PER IBC SECTION 907.2.9.

-RAMPS 0 TO 5% (1:20) DON'T REQUIRE HANDRAILS. BUT HANDRAILS ARE REQUIRED 5% TO 8.33%. NO SLOPE SHALL EXCEED 8.33% IF ACCESSIBLE ROUTE.

-EDGE PROTECTION SHALL BE PROVIDED ON EASH SIDE OF RAMP RUNS AND AT EACH SIDE OF LANDINGS. ANSI A117.1-2009, 405.9

-THE RISE PER ANY RAMP RUN SHALL BE 30" MAX. ANSI A117.1-2009, 405.6

-CLEAR WIDTH OF A RAMP RUN SHALL BE 36" WHERE HANDRAILS ARE PROVIDED ON THE SAM E RUN THE CLEAR WIDTH IS BETWEEN HANDRAILS. ANSI A117.1-2009, 405.5

-HALLWAYS SHALL BE A MINIMUM OF 36" IN WIDTH.

-RAMP HANDRAILS SHALL BE 34" - 38" VERTICALLY ABOVE THE RAMP. ANSI A117.1-2009, 505.4

-RAMP HANDRAILS SHALL EXTEND 12" HORIZONTALLY (MIN) BEYOND THE TOP AND BOTTOM OF RAMP RUNS. ANSI A117.1-2009, 505.10.1

-RAMPS SHALL HAVE LANDINGS AT TOP AND BOTTOM OF EACH RAMP RUN WITH A CLEAR WIDTH AT LEAST AS WIDE AS THE WIDEST RAMP TO THE LANDING AND SHALL HAVE A CLEAR LENGHT OF 60".

-GUARDRAILS OR OTHER BARRIERS SHALL BE PROVIDED WHERE OBJECTS PROTRUSION IS BEYOND THE LIMITS ALLOWED WHERE THE VERTICAL CLEARANCE IS LESS THAN 80" ABOVE THE FLOOR. THE LEADING EDGE OF SUCH GUARDRAIL OR BARRIER SHALL BE 27" MAX. ABOVE FINISH FLOOR. ANSI 307

-PROVIDE GUARDRAILS AT 42" HIGH AT EXTERIOR DECKS/BALCONIES. ANSI A117.1-2009

-GUARDRAILS SHALL HAVE BALUSTERS SUCH THAT A 4" DIAMETER SPHERE CANNOT PASS THROUGH. IBC SECTION 1013.3

-OBJECT WITH LEADING EDGES LESS THAN 27" AND NOT MORE THAN 80" ABOVE THE FLOOR SHALL PROTRUDE 4" MAX. HORIZONTALLY INTO THE CIRCULATION PATH. ANSI. 307.

-OBJECTS HAVE A 4" MAX. PROJECTION FROM WALL WITH A MAX. OF 24" WIDE AND GREATER THAN 27" ABOVE FINISH FLOOR, EXCEPTED WING WALL THAT GOES DOWN TO FLOOR.

-SIGNAGE PER IBC SHALL BE INSTALL AND FIELD VERIFIED AS TO THE LOCATION, TYPE, SIZE AND VERBIAGE.

-STAIR SIGNAGE:
PROVIDE TACTILE STAIR LEVEL IDENTIFICATION SIGNAGE PER ANSI A117.1 SECTION 703.3.
PROVIDE SIGNAGE INSIDE STAIR AT EXTERIOR DOOR STATING 'EXIT' PER ANSI SECTION 504.9.

-OPERABLE WINDOWS SHALL HAVE ACCESSIBLE CONTROLS AT A MAX. HEIGHT OF 48" ABOVE FINISH FLOOR.

-AN EGRESS WINDOW IS REQUIRED IN ALL BEDROOMS. AT LEAST 5.7 SQ. FT. IN SIZE

-ASSURE ALL DOORS HAVE ACCESSIBLE HARDWARE, SUCH AS LEVER STYLE.

-ALL DOORS NEED TO BE 32" CLEAR (36" RECOMMEND), EXCEPT DOORS THAT LEAD INTO AREAS WITH LESS THAN 24" IN DEPTH.

-DOORWAYS SHALL HAVE A CLEAR OPENING WIDTH OF 32" MIN.
MEASURED BETWEEN THE DOOR AND STOP, WITH THE DOOR OPEN 90 DEGREES.

-THRESHOLDS AT DOORWAYS SHALL BE ½" MAX. IN HEIGHT.

-ALL TYPE 'A' ACCESSIBLE AND TYPE 'B' ACCESSIBLE BATHROOMS REQUIRE GRAB BAR REINFORCEMENTS AT BATH TUBS, SHOWERS AND WATER CLOSETS.

-SIGN INDICATING ACCESSIBLE PARKING SHOULD BE LOCATED AT ALL ACCESSIBLE PARKING STALLS.

-IF WIDTH LESS THAN 48" THEN THE SLOPE OF THE FLARED SIDES OF THE CURB RAMP MUST NOT EXCEED 1:12.

-ACCESSIBLE PARKING SPACES MUST BE AT LEAST 96" WIDE AND HAVE AN ADJACENT ACCESS AISLE THAT IS 60" WIDE. VAN ACCESSIBLE 132" WIDE.

-2% OF PARKING SPACES SERVING DWELLING UNITS SHALL BE MADE ACCESSIBLE AND BE LOCATED ON AN ACCESSIBLE ROUTE. A MINIMUM OF ONE ACCESSIBLE PARKING SPACE REQUIRED AT SALES/ RENTAL OFFICE. FOR EVERY SIX OR FRACTION OF SIX ACCESSIBLE PARKING SPACES ONE VAN ACCESSIBLE SPACE IS REQUIRED. IBC 1106

-INSTALL BLOCKING FOR GRAB BARS AT TOILET AND BATHING FIXTURES IN ALL GROUND FLOOR UNITS.

- INSTALL ALL TOILETS 18" FROM DRYWALL FACE OF SIDE WALL IN ALL GROUND FLOOR UNITS.

-TYPE 'B' ACCESSIBLE DWELLING UNITS: (ANSI 117.1 SECTION 1004)

-EITHER ONE 'OPTION 'B' ACCESSIBLE' BATHROOM OR
ALL NEED TO BE 'OPTION 'A' ACCESSIBLE' FHA 7.36 & 7.37.

-MIRRORS ABOVE THE LAVATORIES SHALL HAVE THE BOTTOM EDGE OF THE REFLECTING SURFACE 40" MAX. ABOVE THE FLOOR.

-THE TOP OF THE WATER CLOSET SEAT SHALL BE BETWEEN 15" AND 19" ABOVE FINISH FLOOR.

-WATER CLOSETS SHOULD BE CENTERED ON 36". 18" FROM WALL.

-U-SHAPED KITCHEN SHALL HAVE 60" MIN. BETWEEN OPPOSING COUNTER TOPS AND APPLIANCES. ALTERNATE SHAPED KITCHENS SHALL HAVE A CLEAR SPACE OF 40" BETWEEN OPPOSING COUNTER TOPS AND APPLIANCES. SECTION 1004.12

-A CLEAR FLOOR SPACE, POSITIONED FOR PARALLEL OR FORWARD AND CENTERED, SHALL BE PROVIDED AT EACH KITCHEN APPLIANCE AND FIXTURE. SECTION 1004.12.2

-ACCESSIBLE ROUTES REQUIRE ROUTES TO ANY AND ALL PUBLIC AND COMMON AREAS (ALL FACILITIES, ELEMENTS OUTSIDE, MAILBOXES, SITE FURNISHINGS, OUTSIDE STORAGE AREAS, REFUSE DISPOSAL AREAS, PLAYFIELDS, AMPHITHEATERS, PICNIC SITES, SWIMMING POOLS, SUN DECKS, TENNIS COURTS, CLUBHOUSES, PLAYGROUND, GAZEBOS, PARKING AREA, SIDEWALKS, ALL OR PARTS OF NATURE TRAILS AND JOGGING PATHS.

-36" MINIMUM FOR ACCESSIBLE ROUTE.

-30" X 48" CLEAR FLOOR SPACE CENTERED ON WASHER AND DRYER.

-ALL ENTRY DOORS SHALL REQUIRE 18" CLEAR ON PULL SIDE OF DOOR AND 12" CLEAR ON THE PUSH SIDE OF THE DOOR. ANSI 404

-5% OF THE UNITS IN THE COMPLEX ARE REQUIRED TO BE TYPE 'A' UNITS ON GROUND FLOOR. ALL OTHER GROUND FLOOR UNITS ARE TYPE 'B'.

TYPE 'A' ACCESSIBLE DWELING UNITS (ANSI 117.1 SECTION 1003)

-ALL DOORS SHALL HAVE 18" CLEAR ON PULL SIDE OF DOOR. AND 12 CLEAR ON THE PUSH SIDE OF THE DOOR IF CLOSER IS INSTALLED. ANSI 404

-A CLEAR FLOOR SPACE COMPLYING WITH SECTION 305 SHALL BE PROVIDED AT ALL APPLIANCES AND FIXTURES.

-ALL TYPE 'A UNITS REQUIRE 34" COUNTER HEIGHTS, FROM TOP OF SINK RIM TO FINISH FLOOR.

-WHERE THERE ARE NO OBSTRUCTIONS TO INTERFERE WITH THE REACH OF A PERSON, CONTROLS AND OUTLETS SHALL BE MOUNTED IN A RANGE OF 15" FROM FINISH FLOOR TO 48" ABOVE FINIS FLOOR IN ACCORDANCE WITH ANSI 117.1, SECTION 308.

-30" OF COUNTER SHALL BE DEDICATED TO WORKING SURFACES.

-WORK SURFACE HEIGHT SHALL BE BASED ON THE TOP OF THE SINK RIM AT A MAX. HEIGHT OF 34" ABOVE FINISH FLOOR. A KNEE SPACE OF 30" IN LENGTH SHALL BE PROVIDED IN AT LEAST ONE SECTION OF THE KITCHEN COUNTER TOP.

-REMOVABLE CABINETS MAY BE INSTALLED UNDER THE KITCHEN SINK PROVIDED THEY CAN BE REMOVED WITH OUT REMOVING THE SINK AND THE WALL BEHIND AND FLOOR ARE FINISHED.

-RANGE HOOD CONTROLS SHALL BE MOUNTED A MAX OF 46" AFF.

REVISIONS

PROPOSED 12-PLEX BUILDING FOR:
LEGACY VILLAS
COUNRTY VISTA ROAD, LIBERTY LAKE, WA

WYATT ARCHITECTS AND ASSOCIATES
JAMES A. McARTHUR, A.I.A.
4205 South Crestline
Spokane, WA 99203
Phone: 509-327-7943 / Fax: 509-327-7999
jallanmcarthur@gmail.com
Project Manager:
Lee J. Schwatrzenburg
PO Box 141713
Spokane Valley, WA 99214
Phone: 509-928-1860
lee@wyattarchitects.com

1934 REGISTERED ARCHITECT
JAMES A. McARTHUR, JR.
STATE OF WASHINGTON
6-20-2016

SHEET TITLE: NOTES

DRAWN BY: LJS

PROJECT: 15:26

DATE: 6/20/2016

SHEET NO. A0.2

BUILDING CODE SUMMARY WORKSHEET - BUILDING 'D-E' - 2 STORY MULTI-FAMILY

PROJECT NAME: SPRAGUE APARTMENTS

BUILDING CODE EDITION 2012 IBC

SECTION 1 - BUILDING USE OR OCCUPANCY

Identify all use and occupancy classification group (s) in the Building (i.e. B, M, R-2, A-3, ect.):	U	R-2			
Residential Building -Multi-Family		X			
Private Garages	X				

List all occupancy seperation fire barrier ratings required (i.e.B to S-2 = 2hr), IBC 508	
Include both horizontal and vertical seperations	N/A
And	
Provide mixed use ratio calculations per 508	N/A
Or	
Building is constructed per IBC 508.3.2 for Non-Seperated Uses or IBC 509 Special Provisions	N/A

Lists all incidental use areas (per IBC Table 508.2), floor area, and separation to be provided		
Room or Area	Floor Area (sq.ft.)	Fire Seperation
N/A	N/A	N/A

List all accessory use areas not defined as Incidental Use, and fire barrier requirements (per IBC 508.3.1)			
Room or Area	Floor Area (sq.ft.)	% floor area on story	Fire Seperation
Sprinkler Riser room (Residential Bldgs)	90.00	0.40%	N/A

SECTION 2 - BUILDING CONSTRUCTION

List Construction Type(s) used in the design (IA, IIB, VA, ect.):	VB, NFPA 13R Sprinklers

Building Height		
Type V-B (Residential Building 'D-E') Building Height (per IBC Table 503)	ALLOWED 40'	PROPOSED 28.7
Number of Stories (per IBC Table 503)	3	2
Are Automatic Sprinklers used for Height Modifications? (per IBC Section 504)	NO	NO
Is there a basement?	NO	NO
Is an Automatic Sprinkler System Used in Place of 1 Hour Construction? (per IBC Table 601, Footnote e.) or other fire resistive construction per IBC 601 footnote c.?	NO	NO

Fire Resist. of Ext Walls Based on Fire Sep Distance (per IBC Tables 602 & 705.8					
Building 'D-E'		Fire Separation Dist.			
List Wall Locations (i.e. North, South, ect.)		Provided	Range	Rating	Opening Protection (705.8)
North	Open Space	30'	10'<x<30'	0	NO LIMIT
East	Open Space (-24' GARAGE)	30'	10'<x<30' (VB)		No Limit
South	Open Space	30'	10'<x<30'	0	Not Required
West	Open Space	30'	10'<x<30'	0	No Limit

Fire Resistance Rating Requirements (per IBC Table 601)	Rating Required	Rating Provided	Assembly #
Structural Frame	0 hr	0 hr	See Sheets A3.0 & A3.1
Bearing Walls - Exterior	0 hr	0 hr	
Bearing Walls - Interior	0 hr	0 hr	
Walls Seperating Dwelling Units	1 hr	1 hr	GA FILE# WP 3370
Nonbearing Walls & Partitions- Interior	0 hr	0 hr	
Floors Seperating Dwelling Units	1 hr	1 hr	GA FILE# FC 5109
Floor Construction	0 hr	0 hr	
Roof Construction	0 hr	0 hr	

SECTION 3 - BUILDING AREA LIMITATIONS: "ALLOWABLE"

If there are multiple construction types, or if a fire wall divides the building, provide a separation analysis for each area. Repeat as necessary.

Area Limitations for Each Proposed IBC Use or Occupancy Group Occupancy	Occupancy 1	Occupancy 2
IBC Use / Occupancy Group	R-2	U
Table 503 Area Limitation (per IBC Table503) <At>	2 Stories @ 7000 sq.ft. +1 story per IBC 504.2 Sprinkler Inc.	1 Story @ 5500 sq.ft.
Frontage Area Increase Multiplier (per IBC 506.2) <If>	[F/P-0.25]W/30	[F/P-0.25]W/30
Automatic Sprinkler System Area Increase Multiplier (per IBC 506.3) <Is> (not allowed for IBC 903.3.1.2 NFPA 13R sprinklers)	0%	0%
Total ALLOWANCE Floor Area (Equation5-1 / IBC 506.1) <Aa>	At+[At x If] + [At x Is]	At+[At x If] + [At x Is]
Total ALLOWANCE Building Area	3 x Aa	3 x Aa
Does the Building Qualify for Unlimited Area (per IBC 507)	NO	

SECTION 3A - BUILDING AREAS "PROPOSED"

If there are multiple construction types, or if a fire wall divides the building, provide a separation analysis for each area. Repeat as necessary.

Area Limitations for Each Proposed IBC Use or Occupancy Group or Building Portion	Occupancy 1		Occupancy 2
IBC Use / Occupancy Group	R-2		U
Table 503 Area Limitation (per IBC Table503) <At>	7000		5500
Frontage Area Increase Multiplier (per IBC 506.2) <If>	.70		N/A
Building Perimeter w/ 20' open space <F>	472	NORTH - 65' SOUTH - 65' EAST - 159' WEST - 183'	0
Perimeter of building <P>	496		0
Width of open space <W>	30		N/A
Automatic Sprinkler System Area Increase Multiplier (per IBC 506.3) <Is> (not allowed for IBC 903.3.1.2 NFPA 13R sprinklers)	0		0
Total ALLOWABLE Floor Area (Equation 5-1 / IBC 506.1) <Aa>	11,911		5,500
Total ALLOWANCE Building Area	3 x Aa = 35,733		
Max. PROPOSED Floor Area	9,732		3,764
Total PROPOSED Building Area	3,764 +5,360 + 9,732 = 18,856		

SECTION 4 - OCCUPANT LOAD BUILDING EXITING

If there are multiple construction types, or if a fire wall divides the building, provide a separation analysis for each area. Repeat as necessary.

	Level 1	Level 2					
Floor Area (sf)	9,124	9,732		(L1 w/o Decks/Stor.)			
Occupant Load Factor (per Table 1004.1.1)	200	200					
Total Occupant Load Per Floor (1004.4)	46	49					

Number of Exits and Exit Widths From Each Level								
	Number of Exits per 1015.1		Egress Components		Exit Width per 1005.1 w/ sprinklers			
					Stair Width (in.)(0.3)		Exit (in.)(0.2)	
	Req'd.	Prov.	Exit	Stairs	Req'd.	Prov.	Req'd.	Prov.
Level 1	2	4	4	0	0	0	9.2	36
Level 2	2	3	0	3	14.7	42	0	0
Section 1009.1 - Stairways serving an occupant load less than 50 shall have clear width of not less than 36 in.								

Are Areas of Refuge Required	NO

ALLOWABLE FLOOR AREA:

TYPE V-B. – SPRINKLED (NFPA 13R)

$$I_f = [472/496 - 0.25]\ 30/30 = .70$$

$$A_t = 7{,}000$$

$$A_a = 7{,}000 + [7{,}000 \times .70] + [7{,}000 \times 0] = 11{,}911$$

$$A_a = 7{,}000 + [4{,}911] + [0] = 11{,}911$$

ALLOWABLE/ FLOOR

BUILDING CODE SUMMARY WORKSHEET - BUILDING 'B-C' & 'F-G' - 2 STORY MULTI-FAMILY

PROJECT NAME: SPRAGUE APARTMENTS

BUILDING CODE EDITION 2012 IBC

SECTION 1 - BUILDING USE OR OCCUPANCY

Identify all use and occupancy classification group (s) in the Building (i.e. B, M, R-2, A-3, ect.):	U	R-2			
Residential Building -Multi-Family		X			
Private Garages	X				

List all occupancy seperation fire barrier ratings required (i.e.B to S-2 = 2hr), IBC 508	
Include both horizontal and vertical seperations	N/A
And	
Provide mixed use ratio calculations per 508	N/A
Or	
Building is constructed per IBC 508.3.2 for Non-Seperated Uses or IBC 509 Special Provisions	N/A

Lists all incidental use areas (per IBC Table 508.2), floor area, and separation to be provided		
Room or Area	Floor Area (sq.ft.)	Fire Seperation
N/A	N/A	N/A

List all accessory use areas not defined as Incidental Use, and fire barrier requirements (per IBC 508.3.1)			
Room or Area	Floor Area (sq.ft.)	% floor area on story	Fire Seperation
Sprinkler Riser room (Residential Bldgs)	90.00	0.40%	N/A

SECTION 2 - BUILDING CONSTRUCTION

List Construction Type(s) used in the design (IA, IIB, VA, ect.):	VB, NFPA 13R Sprinklers

Building Height		
Type V-B (Residential Building 'B-C' & 'F-G') Building Height (per IBC Table 503)	ALLOWED 40'	PROPOSED 28.7
Number of Stories (per IBC Table 503)	3	2
Are Automatic Sprinklers used for Height Modifications? (per IBC Section 504)	NO	NO
Is there a basement?	NO	NO
Is an Automatic Sprinkler System Used in Place of 1 Hour Construction? (per IBC Table 601, Footnote e.) or other fire resistive construction per IBC 601 footnote c.?	NO	NO

Fire Resist. of Ext Walls Based on Fire Sep Distance (per IBC Tables 602 & 705.8					
Building 'B-C' & 'F-G'		Fire Separation Dist.			
List Wall Locations (i.e. North, South, ect.)		Provided	Range	Rating	Opening Protection (705.8)
North	Open Space	30'	10'<x<30'	0	NO LIMIT
East	Open Space	10'	10'<x<30' (VB)		No Limit
South	Open Space	30'	10'<x<30'	0	Not Required
West	Open Space	10'	10'<x<30'	0	No Limit

Fire Resistance Rating Requirements (per IBC Table 601)	Rating Required	Rating Provided	Assembly #
Structural Frame	0 hr	0 hr	See Sheets A3.0 & A3.1
Bearing Walls - Exterior	0 hr	0 hr	
Bearing Walls - Interior	0 hr	0 hr	
Walls Seperating Dwelling Units	1 hr	1 hr	GA FILE# WP 3370
Nonbearing Walls & Partitions- Interior	0 hr	0 hr	
Floors Seperating Dwelling Units	1 hr	1 hr	GA FILE# FC 5109
Floor Construction	0 hr	0 hr	
Roof Construction	0 hr	0 hr	

SECTION 3 - BUILDING AREA LIMITATIONS: "ALLOWABLE"

If there are multiple construction types, or if a fire wall divides the building, provide a separation analysis for each area. Repeat as necessary.

Area Limitations for Each Proposed IBC Use or Occupancy Group Occupancy	Occupancy 1	Occupancy 2
IBC Use / Occupancy Group	R-2	U
Table 503 Area Limitation (per IBC Table503) <At>	2 Stories @ 7000 sq.ft. +1 story per IBC 504.2 Sprinkler Inc.	1 Story @ 5500 sq.ft.
Frontage Area Increase Multiplier (per IBC 506.2) <If>	[F/P-0.25]W/30	[F/P-0.25]W/30
Automatic Sprinkler System Area Increase Multiplier (per IBC 506.3) <Is> (not allowed for IBC 903.3.1.2 NFPA 13R sprinklers)	0%	0%
Total ALLOWANCE Floor Area (Equation5-1 / IBC 506.1) <Aa>	At+[At x If] + [At x Is]	At+[At x If] + [At x Is]
Total ALLOWANCE Building Area	3 x Aa	3 x Aa
Does the Building Qualify for Unlimited Area (per IBC 507)	NO	

SECTION 3A - BUILDING AREAS "PROPOSED"

If there are multiple construction types, or if a fire wall divides the building, provide a separation analysis for each area. Repeat as necessary.

Area Limitations for Each Proposed IBC Use or Occupancy Group or Building Portion	Occupancy 1		Occupancy 2
IBC Use / Occupancy Group	R-2		U
Table 503 Area Limitation (per IBC Table503) <At>	7000		5500
Frontage Area Increase Multiplier (per IBC 506.2) <If>	.48		N/A
Building Perimeter w/ 20' open space <F>	366	NORTH - 183' SOUTH - 183' EAST - 0' WEST - 0'	0
Perimeter of building <P>	496		0
Width of open space <W>	30		N/A
Automatic Sprinkler System Area Increase Multiplier (per IBC 506.3) <Is> (not allowed for IBC 903.3.1.2 NFPA 13R sprinklers)	0		0
Total ALLOWABLE Floor Area (Equation 5-1 / IBC 506.1) <Aa>	10,415		5,500
Total ALLOWANCE Building Area	3 x Aa = 31,245		
Max. PROPOSED Floor Area	9,732		3,764
Total PROPOSED Building Area	3,764 +5,360 + 9,732 = 18,856		

SECTION 4 - OCCUPANT LOAD BUILDING EXITING

If there are multiple construction types, or if a fire wall divides the building, provide a separation analysis for each area. Repeat as necessary.

	Level 1	Level 2					
Floor Area (sf)	9,124	9,732		(L1 w/o Decks/Stor.)			
Occupant Load Factor (per Table 1004.1.1)	200	200					
Total Occupant Load Per Floor (1004.4)	46	49					

Number of Exits and Exit Widths From Each Level								
	Number of Exits per 1015.1		Egress Components		Exit Width per 1005.1 w/ sprinklers			
					Stair Width (in.)(0.3)		Exit (in.)(0.2)	
	Req'd.	Prov.	Exit	Stairs	Req'd.	Prov.	Req'd.	Prov.
Level 1	2	4	4	0	0	0	9.2	36
Level 2	2	3	0	3	14.7	42	0	0
Section 1009.1 - Stairways serving an occupant load less than 50 shall have clear width of not less than 36 in.								

Are Areas of Refuge Required	NO

ALLOWABLE FLOOR AREA:

TYPE V-B. – SPRINKLED (NFPA 13R)

$$I_f = [366/496 - 0.25]\ 30/30 = .48$$

$$A_t = 7{,}000$$

$$A_a = 7{,}000 + [7{,}000 \times .48] + [7{,}000 \times 0] = 3{,}415$$

$$A_a = 7{,}000 + [3{,}415] + [0] = 10{,}415$$

ALLOWABLE/ FLOOR

REVISIONS

PROPOSED 12-PLEX BUILDING FOR:

LEGACY VILLAS

COUNRTY VISTA ROAD, LIBERTY LAKE, WA

WYATT ARCHITECTS AND ASSOCIATES

JAMES A. McARTHUR, A.I.A.

4205 South Crestline
Spokane, WA 99203
Phone: 509-327-7943 / Fax: 509-327-7999
jallanmcarthur@gmail.com

Project Manager:
Lee J. Schwatrzenburg
PO Box 141713
Spokane Valley, WA 99214
Phone: 509-928-1860
lee@wyattarchitects.com

1934 REGISTERED ARCHITECT
JAMES A. McARTHUR, JR.
STATE OF WASHINGTON

6-20-2016

SHEET TITLE: 12-PLEX CODE SHEET

DRAWN BY: LJS

PROJECT: 15:26

DATE: 6/20/2016

SHEET NO. A0.3

BUILDING CODE SUMMARY WORKSHEET - BUILDING 'J-K' - 2 STORY MULTI-FAMILY

PROJECT NAME: SPRAGUE APARTMENTS

BUILDING CODE EDITION 2012 IBC

SECTION 1 - BUILDING USE OR OCCUPANCY

Identify all use and occupancy classification group (s) in the Building (i.e. B, M, R-2, A-3, ect.):	U	R-2			
Residential Building -Multi-Family		X			
Private Garages	X				

List all occupancy seperation fire barrier ratings required (i.e.B to S-2 = 2hr), IBC 508	
Include both horizontal and vertical seperations	N/A
And	
Provide mixed use ratio calculations per 508	N/A
Or	
Building is constructed per IBC 508.3.2 for Non-Seperated Uses or IBC 509 Special Provisions	N/A

Lists all incidental use areas (per IBC Table 508.2), floor area, and separation to be provided		
Room or Area	Floor Area (sq.ft.)	Fire Seperation
N/A	N/A	N/A

List all accessory use areas not defined as Incidental Use, and fire barrier requirements (per IBC 508.3.1)			
Room or Area	Floor Area (sq.ft.)	% floor area on story	Fire Seperation
Sprinkler Riser room (Residential Bldgs)	90.00	0.40%	N/A

SECTION 2 - BUILDING CONSTRUCTION

List Construction Type(s) used in the design (IA, IIB, VA, ect.):	VB, NFPA 13R Sprinklers

Building Height		
Type V-B (Residential Building 'J-K') Building Height (per IBC Table 503)	ALLOWED 40'	PROPOSED 28.7
Number of Stories (per IBC Table 503)	3	2
Are Automatic Sprinklers used for Height Modifications? (per IBC Section 504)	NO	NO
Is there a basement?	NO	NO
Is an Automatic Sprinkler System Used in Place of 1 Hour Construction? (per IBC Table 601, Footnote e.) or other fire resistive construction per IBC 601 footnote c.?	NO	NO

Fire Resist. of Ext Walls Based on Fire Sep Distance (per IBC Tables 602 & 705.8					
Building 'J-K'		Fire Separation Dist.			
List Wall Locations (i.e. North, South, ect.)		Provided	Range	Rating	Opening Protection (705.8)
North	Open Space	30'	10'<x<30'	0	NO LIMIT
East	Open Space	0'	10'<x<30' (VB)		No Limit
South	Open Space	30'	10'<x<30'	0	Not Required
West	Open Space	30'	10'<x<30'	0	No Limit

Fire Resistance Rating Requirements (per IBC Table 601)	Rating Required	Rating Provided	Assembly #
Structural Frame	0 hr	0 hr	See Sheets A3.0 & A3.1
Bearing Walls - Exterior	0 hr	0 hr	
Bearing Walls - Interior	0 hr	0 hr	
Walls Seperating Dwelling Units	1 hr	1 hr	GA FILE# WP 3370
Nonbearing Walls & Partitions- Interior	0 hr	0 hr	
Floors Seperating Dwelling Units	1 hr	1 hr	GA FILE# FC 5109
Floor Construction	0 hr	0 hr	
Roof Construction	0 hr	0 hr	

SECTION 3 - BUILDING AREA LIMITATIONS: "ALLOWABLE"

If there are multiple construction types, or if a fire wall divides the building, provide a separation analysis for each area. Repeat as necessary.

Area Limitations for Each Proposed IBC Use or Occupancy Group Occupancy	Occupancy 1	Occupancy 2
IBC Use / Occupancy Group	R-2	U
Table 503 Area Limitation (per IBC Table503) <At>	2 Stories @ 7000 sq.ft. + 1 story per IBC 504.2 Sprinkler Inc.	1 Story @ 5500 sq.ft.
Frontage Area Increase Multiplier (per IBC 506.2) <If>	[F/P-0.25]W/30	[F/P-0.25]W/30
Automatic Sprinkler System Area Increase Multiplier (per IBC 506.3) <Is> (not allowed for IBC 903.3.1.2 NFPA 13R sprinklers)	0%	0%
Total ALLOWANCE Floor Area (Equation5-1 / IBC 506.1) <Aa>	At+[At x If] + [At x Is]	At+[At x If] + [At x Is]
Total ALLOWANCE Building Area	3 x Aa	3 x Aa
Does the Building Qualify for Unlimited Area (per IBC 507)		NO

SECTION 3A - BUILDING AREAS "PROPOSED"

If there are multiple construction types, or if a fire wall divides the building, provide a separation analysis for each area. Repeat as necessary.

Area Limitations for Each Proposed IBC Use or Occupancy Group or Building Portion	Occupancy 1		Occupancy 2
IBC Use / Occupancy Group	R-2		U
Table 503 Area Limitation (per IBC Table503) <At>	7000		5500
Frontage Area Increase Multiplier (per IBC 506.2) <If>	.70		N/A
Building Perimeter w/ 20' open space <F>	431 NORTH - 183' SOUTH - 183' EAST - 0' WEST - 65'		0
Perimeter of building <P>	496		0
Width of open space <W>	30		N/A
Automatic Sprinkler System Area Increase Multiplier (per IBC 506.3) <Is> (not allowed for IBC 903.3.1.2 NFPA 13R sprinklers)	0		0
Total ALLOWABLE Floor Area (Equation 5-1 / IBC 506.1) <Aa>	11,332		5,500
Total ALLOWANCE Building Area	3 x Aa = 33,997		
Max. PROPOSED Floor Area	9,732		3,764
Total PROPOSED Building Area	3,764 +5,360 + 9,732 = 18,856		

SECTION 4 - OCCUPANT LOAD BUILDING EXITING

If there are multiple construction types, or if a fire wall divides the building, provide a separation analysis for each area. Repeat as necessary.

	Level 1	Level 2					
Floor Area (sf)	9,124	9,732		(L1 w/o Decks/Stor.)			
Occupant Load Factor (per Table 1004.1.1)	200	200					
Total Occupant Load Per Floor (1004.4)	46	49					

Number of Exits and Exit Widths From Each Level								
	Number of Exits per 1015.1		Egress Components		Exit Width per 1005.1 w/ sprinklers			
					Stair Width (in.)(0.3)		Exit (in.)(0.2)	
	Req'd.	Prov.	Exit	Stairs	Req'd.	Prov.	Req'd.	Prov.
Level 1	2	4	4	0	0	0	9.2	36
Level 2	2	3	0	3	14.7	42	0	0
Section 1009.1 - Stairways serving an occupant load less than 50 shall have clear width of not less than 36 in.								

Are Areas of Refuge Required	NO

ALLOWABLE FLOOR AREA:

TYPE V–B. – SPRINKLED (NFPA 13R)

$I_f = [472/496 - 0.25]\ 30/30 = .61$

$A_t = 7{,}000$

$A_a = 7{,}000 + [7{,}000 \times .61] + [7{,}000 \times 0] = 11{,}332$

$A_a = 7{,}000 + [4{,}332] + [0] = 11{,}332$ ALLOWABLE/ FLOOR

REVISIONS

PROPOSED 12-PLEX BUILDING FOR:

LEGACY VILLAS

COUNRTY VISTA ROAD, LIBERTY LAKE, WA

WYATT ARCHITECTS AND ASSOCIATES

JAMES A. McARTHUR, A.I.A.

Project Manager:
Lee Schwartzenburg
East 904 Mission
Spokane Valley, WA 99214
Phone 509.928.1960
leeschwartz@comcast.net

Spokane Office
South 404 Cedar
Spokane, WA
99202
Phone 509-327-7949 / Fax 509-327-7999
jallenmcarthur@gmail.com

1934 REGISTERED ARCHITECT
JAMES A. MARTINIS, JR.
STATE OF WASHINGTON

6-20-2016

SHEET TITLE:
12–PLEX
CODE SHEET

DRAWN BY:
LJS

PROJECT:
15:26

DATE:
6/20/2016

SHEET NO.
A0.4

PROJECT INFORMATION

Name of Project: LEGACY VILLAS APARTMENTS - PHASE I
Date: 6/15/2016
Street Address: (TBD) COUNTRY VISTA DRIVE - LIBERTY LAKE, WA
Parcel Numbers: 55156.9202 & 55161.9203

OWNER: Legacy Villas LLC (name) PO Box 949 (address) Hayden, ID 83835 (phone) 208/765-5059
CONTRACTOR: Copper Basin PO Box 949 Hayden, ID 83835 208/765-5059
Contact Person: Jeremy Hopson PO Box 949 Hayden, ID 83835 208/765-5059
Project is: APARTMENT COMPLEX

Existing lot/building use: Vacant
Proposed Use: RESIDENTIAL
Occupancy Group: R-2
Construction Type Required: V-B
Auto Fire-extinguishing System: NFPA 13R
Actual Construction Type: V-B

Allowable Height: 40'
Allowable Area: 7,000 S.F.
Actual Building Height and no. of stories: 33'6" feet, TWO stories;
Ground floor area and occupant load: Area: 9,124sf - 46 occupants -Per 12-Plex,
Total new floor area: 18,856sf Per 12-Plex; Total existing floor area: N/A;
New construction Valuation: $1,780,000 12-PLEX;
ZONING:
Hazard Area? (Airport, Slide, Flood): N/A
Any Previous Environmental Declarations on this site: N/A
Use Zone of lot: M-2
Use Zone of adjacent lots: North: M-2, South: M-2, East: M-2, West: M-2
Setbacks & Yards: North: 25', South: 10'; East: 5'; West: 10'

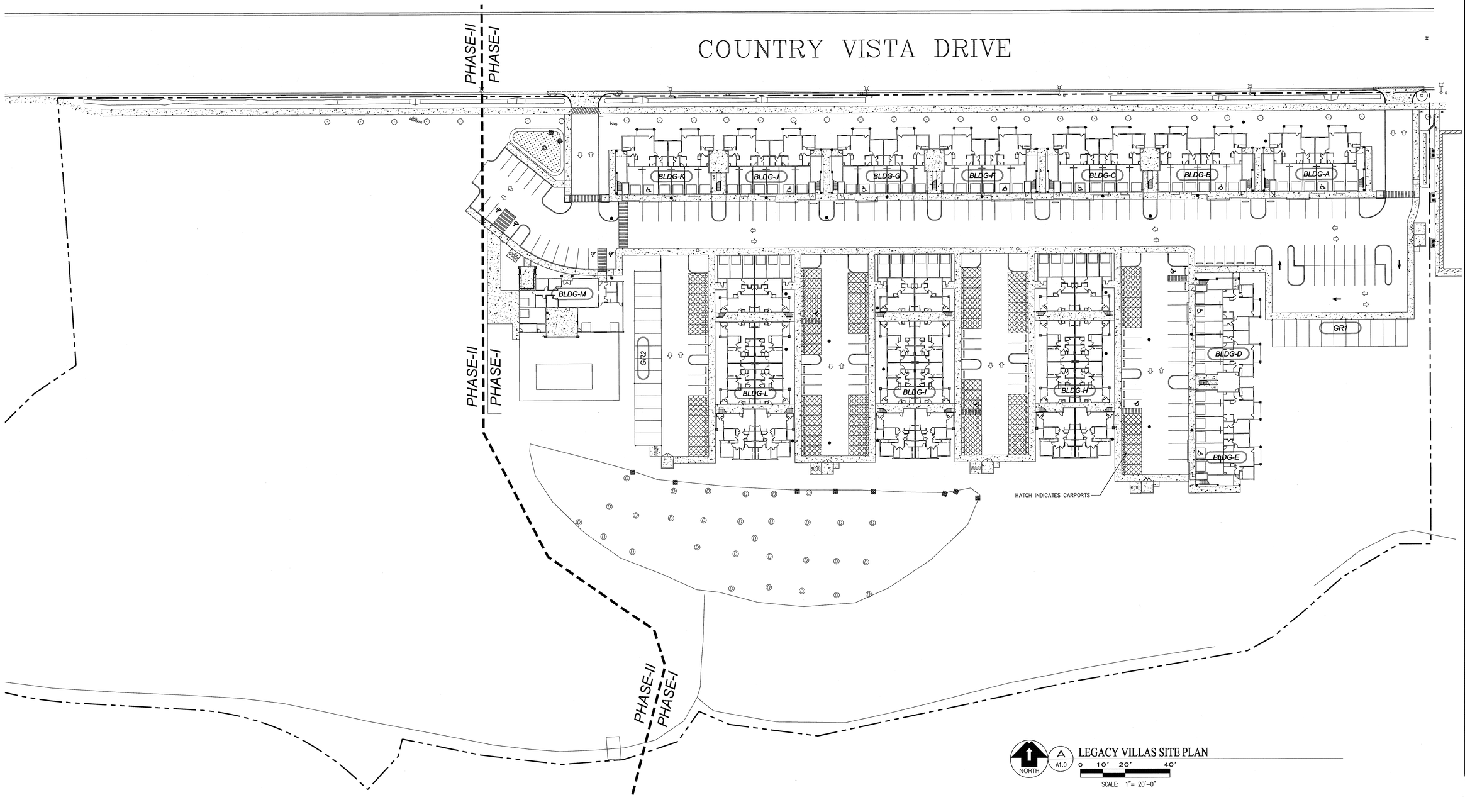

LEGACY VILLAS SITE PLAN

REVISIONS

PROPOSED 12-PLEX BUILDING FOR:
LEGACY VILLAS
COUNRTY VISTA ROAD, LIBERTY LAKE, WA

WYATT ARCHITECTS AND ASSOCIATES
JAMES A. McARTHUR, A.I.A.
Project Manager: Lee J. Schwatrzenburg
PO Box 141713
Spokane Valley, WA 99214
Phone 509-328-8860
lee@wyattarchitects.com
4205 South Crestline
Spokane, WA 99203
Phone 509-327-7943 / Fax 509-327-7999
jaillanmcarthur@gmail.com

1934 REGISTERED ARCHITECT
JAMES A. McARTHUR, JR.
STATE OF WASHINGTON
6-20-2016

SHEET TITLE: SITE PLAN
DRAWN BY: LJS
PROJECT: 15:26
DATE: 6/20/2016
SHEET NO. A1.0

1/4" BUILDING PLANS ARE
ON SHEET A3.0 AND A3.1

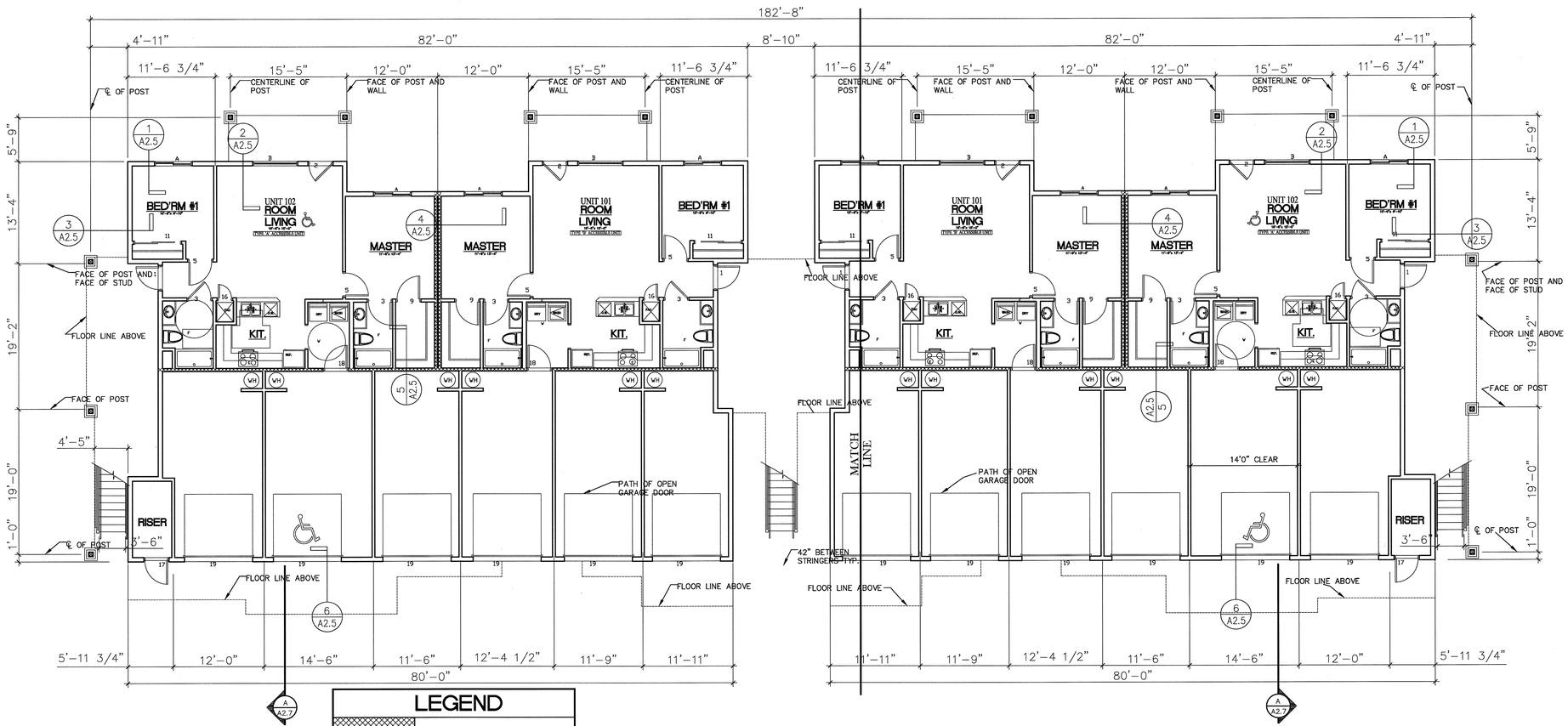

LEGEND

	1 HOUR WALL

12-PLEX MAIN FLOOR PLAN BUILDING B-C
BUILDING D-E, G-F & J-K SIMILAR

NORTH A A2.0

0 4' 8' 16'

SCALE: 1/8"=1'-0"

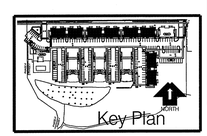

REVISIONS

PROPOSED 12-PLEX BUILDING FOR:

LEGACY VILLAS

COUNRTY VISTA ROAD, LIBERTY LAKE, WA

WYATT ARCHITECTS AND ASSOCIATES
JAMES A. McARTHUR, A.I.A.
Project Manager:
Lee & Schwartzenburg
East 904 Boone Avenue
Spokane, WA 99202
Phone 509-327-7343 Fax 509-327-7399
leeandjillarchitects.com

1934 REGISTERED ARCHITECT
JAMES A. McARTHUR, JR.
STATE OF WASHINGTON
6-20-2016

SHEET TITLE:	12-PLEX MAIN FLOOR PLAN
DRAWN BY:	LJS
PROJECT:	15:26
DATE:	6/20/2016
SHEET NO.	A2.0

1/4" BUILDING PLANS ARE
ON SHEET A3.2 AND A3.3

LEGEND	
	1 HOUR WALL

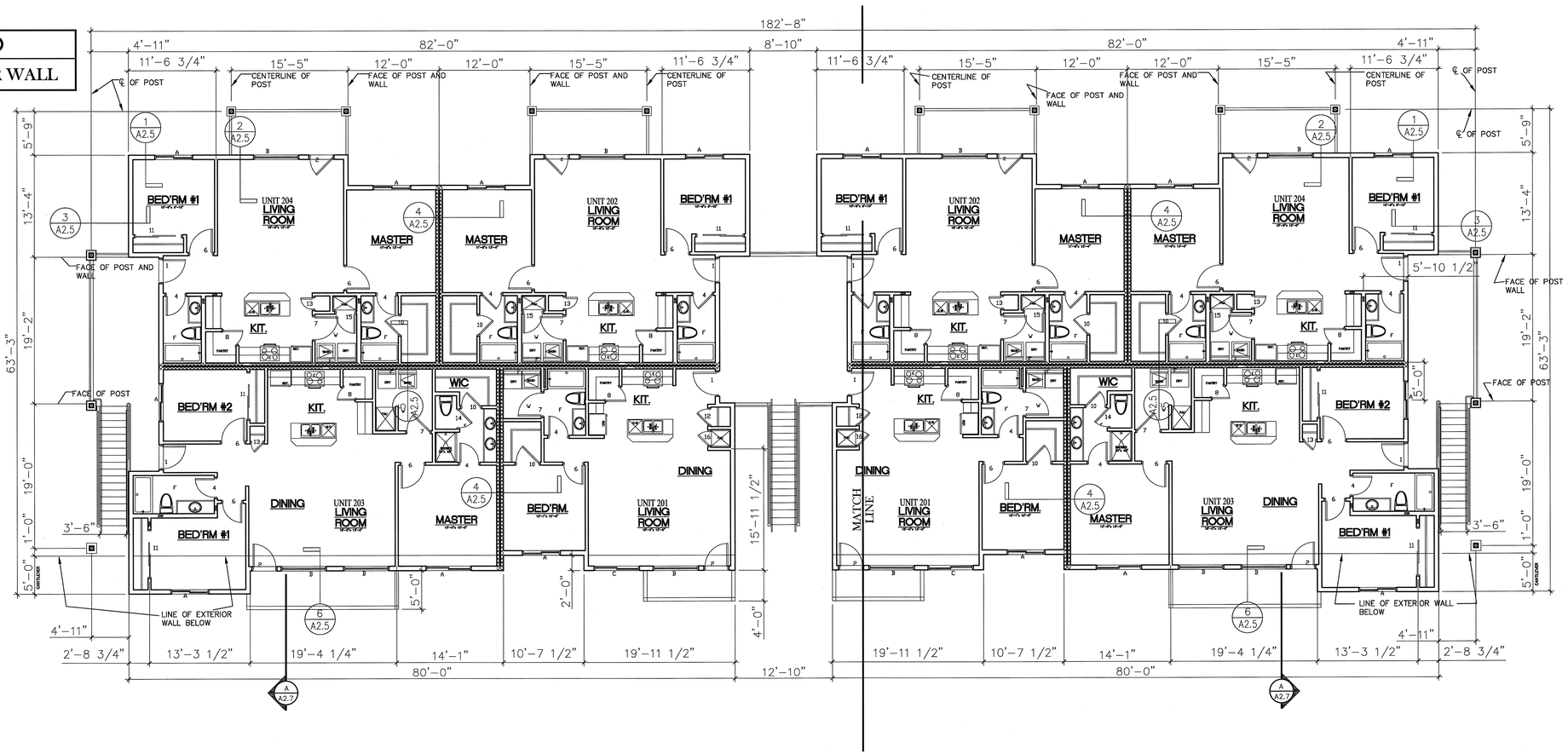

A 12-PLEX 2nd FLOOR PLAN BUILDING B-C
A2.1 BUILDING D-E, G-F & J-K SIMILAR

NORTH

0 4' 8' 16'
SCALE: 1/8"=1'-0"

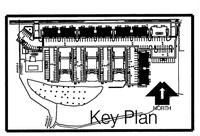

REVISIONS

PROPOSED 12-PLEX BUILDING FOR:

LEGACY VILLAS

COUNRTY VISTA ROAD, LIBERTY LAKE, WA

WYATT ARCHITECTS AND ASSOCIATES
JAMES A. McARTHUR, A.I.A.
4205 South Crestline
Spokane, WA 99203
Phone 509-327-7943 / Fax: 509-327-7999
jallanmcarthur@gmail.com

Project Manager:
Lee J. Schwatrzenburg
PO Box 141713
Spokane Valley, WA 99214
Phone 509-928-8860
lee@wyattarchitects.com

1934 REGISTERED ARCHITECT
JAMES A. McARTHUR, JR.
STATE OF WASHINGTON
6-20-2016

SHEET TITLE:
12-PLEX
2nd FLOOR PLAN

DRAWN BY:
LJS

PROJECT:
15:26

DATE:
6/20/2016

SHEET NO.
A2.1

DOOR SCHEDULE

DOOR MARK	1. DOOR SIZE AND LOCATION	2. TYPE	3. THICKNESS	4. CONSTRUCTION	5. FACING/FINISH	6. GLASS	7. RATING	8. FRAME TYPE	9. FRAME FINISH	REMARKS
	SEE DOOR LEGEND									
①	ENTRY 3'-0" X 6'-8"	A	1-3/4	ISD	MP	--	--	WD	WP	AUTO CLOSER AND SMOKE SEAL DEADBOLT
2	PATIO/DECK 3'-0" X 6'-8"	B	1-3/4	ISD	MP	IT	--	WD	WP	TRANSOM V/ 8" HEAD HEIGHT DEADBOLT
3	BATH 3'-0" X 6'-8"	A	1-1/8	HC	FF	--	--	WD	WP	PRIVACY LOCK
4	BATH 2'-6" X 6'-8"	A	1-1/8	HC	FF	--	--	WD	WP	PRIVACY LOCK
5	BED. RM. 3'-0" X 6'-8"	A	1-1/8	HC	FF	--	--	WD	WP	PRIVACY LOCK
6	BED. RM. 2'-6" X 6'-8"	A	1-1/8	HC	FF	--	--	WD	WP	PRIVACY LOCK
7	LAUNDRY 3'-0" X 6'-8"	A	1-1/8	HC	FF	--	--	WD	WP	
8	PANTRY 2'-6" X 6'-8"	A	1-1/8	HC	FF	--	--	WD	WP	--
9	CLOSET 3'-0" X 6'-8"	A	1-1/8	HC	FF	--	--	WD	WP	
10	CLOSET 2'-6" X 6'-8"	A	1-1/8	HC	FF	--	--	WD	WP	
11	BED. CLST. 6'-0" X 6'-8"	C	1-1/8	HC	FF	--	--	WD	WP	BI-PASS
12	CLOSET 2'-0" X 6'-8"	A	1-1/8	HC	FF	--	--	WD	WP	--
13	CLOSET 1'-6" X 6'-8"	A	1-1/8	HC	FF	--	--	WD	WP	--
14	WATER CLOSET 2'-4" X 6'-8"	A	1-1/8	HC	FF	--	--	WD	WP	--
15	FAU 2'-6" X 6'-8"	A	1-1/8	HC	FF	--	--	WD	WP	--
16	FAU 2'-0" X 6'-8"	A	1-1/8	HC	FF	--	--	WD	WP	--
17	RISER RM 3'-0" X 6'-8"	A	1-3/4	ISD	MP	--	--	WD	WP	DEADBOLT
18	GARAGE 3'-0" X 6'-8"	A	1-3/4	ISD	MP	--	20	WD	WP	DEADBOLT
19	GARAGE 9'-0" X 8'-0"	D	1-3/4	ISD	MP	--	--	WD	WP	OVER HEAD DOOR-AUTO CLOSER

DOOR TYPES

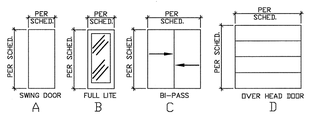

DOOR LEGEND

2. TYPE:
SEE BELOW

4. CONSTRUCTION:
ISD = INSULATED STEEL DOOR
HC = HOLLOW CORE WOOD
SC = SOLID CORE WOOD
VN = VINYL

5./9. FACING/FINISH:
MP = METAL PAINTED
WS = WOOD STAINED
FF = FACTORY FINISH

6. GLASS TYPE:
IT = INSULATED TEMPERED PLATE
FR = FIRE RATED (20 MIN.)

8. DOOR FRAME:
VN = VINYL
WD = WOOD
AL = ALUMINUM
HM = HOLLOW METAL

NOTE: ALL EXTERIOR DOORS TO BE INSULATED WITH A U-VALUE OF .20 OR LESS.

DOOR NOTES:

1. ALL EXIT DOORS ARE TO BE OPERABLE FROM THE INSIDE WITHOUT THE USE OF A KEY OR SPECIAL KNOWLEDGE.
2. LATCHING AND LOCKING DOORS THAT ARE HAND ACTIVATED AND IN A PATH OF TRAVEL SHALL BE OPERABLE WITH A SINGLE EFFORT BY LEVER TYPE HARDWARE OR OTHER HARDWARE THAT PROVIDES PASSAGE WITHOUT GRASPING THE HARDWARE AT ALL GROUND FLOOR UNITS.
3. MAXIMUM EFFORT TO OPERATE DOORS MUST NOT EXCEED 8.5 POUNDS FOR EXTERIOR DOORS AND 5 POUNDS FOR INTERIOR DOORS AT GROUND FLOOR UNITS.
4. ALL EXTERIOR DOOR SHALL BE INSULATED AND WEATHER STRIPPED.
5. DOOR THRESHOLD SHALL BE A MAX HEIGHT OF 1/2" AT ALL GROUND FLOOR UNITS.
6. DOOR HARDWARE SHALL BE LEVER TYPE.
7. DOOR SEPARATING PRIVATE GARAGE FROM DWELLING SHALL BE 20 MIN. RATED IBC 406.3.4

WINDOW SCHEDULE

WINDOW MARK	ROUGH OPENNING WIDTH X HEIGHT	FRESH-AIR VENT	GLASS TYPE	FRAME	SILL HEIGHT (A.F.F.)	REMARKS
A	5'-0" x 5'-0"	--	IN	VN	3'-0"±	SLIDER-EGRESS - SCREENED
B	6'-0" x 5'-0"	-	IN	VN	3'-0"±	FIXED
C	6'-0" x 5'-0"	-	IN	VN	3'-0"±	SLIDER - SCREENED

WINDOW LEGEND

GLASS TYPE:
IT = INSULATED TEMPERED
IN = 1" INSULATED
FR = FIRE RATED
PG = PLATE GLASS

FRAME MATERIAL:
MV = MANUFACTURED WOOD
CV = CUSTOM WOOD
VN = VINYL
AL = ALUMINUM
ST = STEEL
HM = HOLLOW METAL

GLAZING IN FIXED OR OPERABLE PANELS WITHIN 24 INCHES OF EITHER VERTICAL SIDE OF THE DOOR SHALL BE SAFETY GLASS.

FIELD VERIFY ALL ROUGH OPENINGS OF WINDOWS AND DOORS PRIOR TO PURCHASE.

ALL GROUND FLOOR WINDOW LATCHS 48" A.F.F MAX.

ALL EXTERIOR GLAZING SHALL INCLUDE LOW-E AND ARGON GAS.

EXTERIOR VINYL OPERABLE WINDOWS- U-.30 MAX.
EXTERIOR VINYL FIXED WINDOWS- U-.27 MAX.

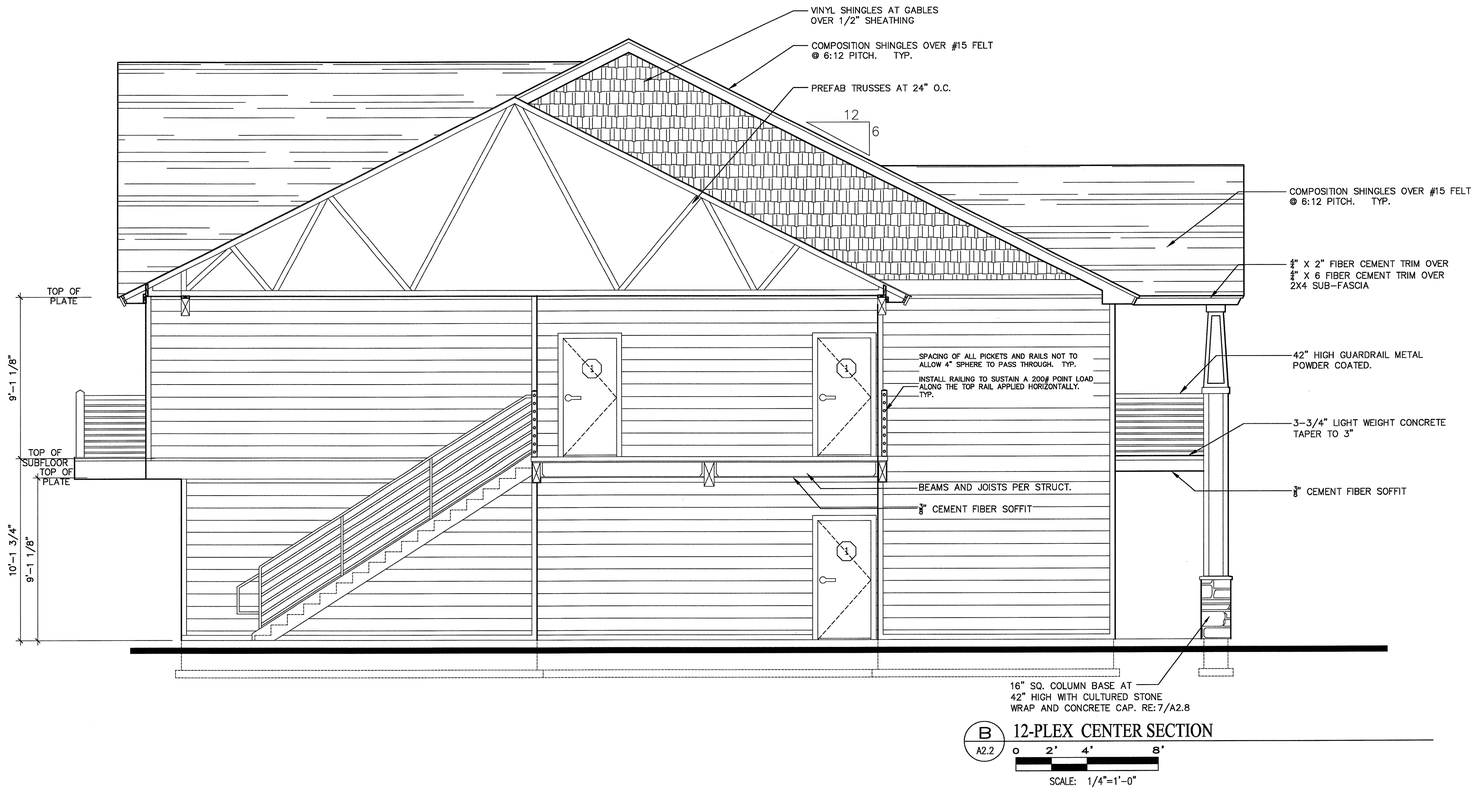

B A2.2 12-PLEX CENTER SECTION

0 2' 4' 8'

SCALE: 1/4"=1'-0"

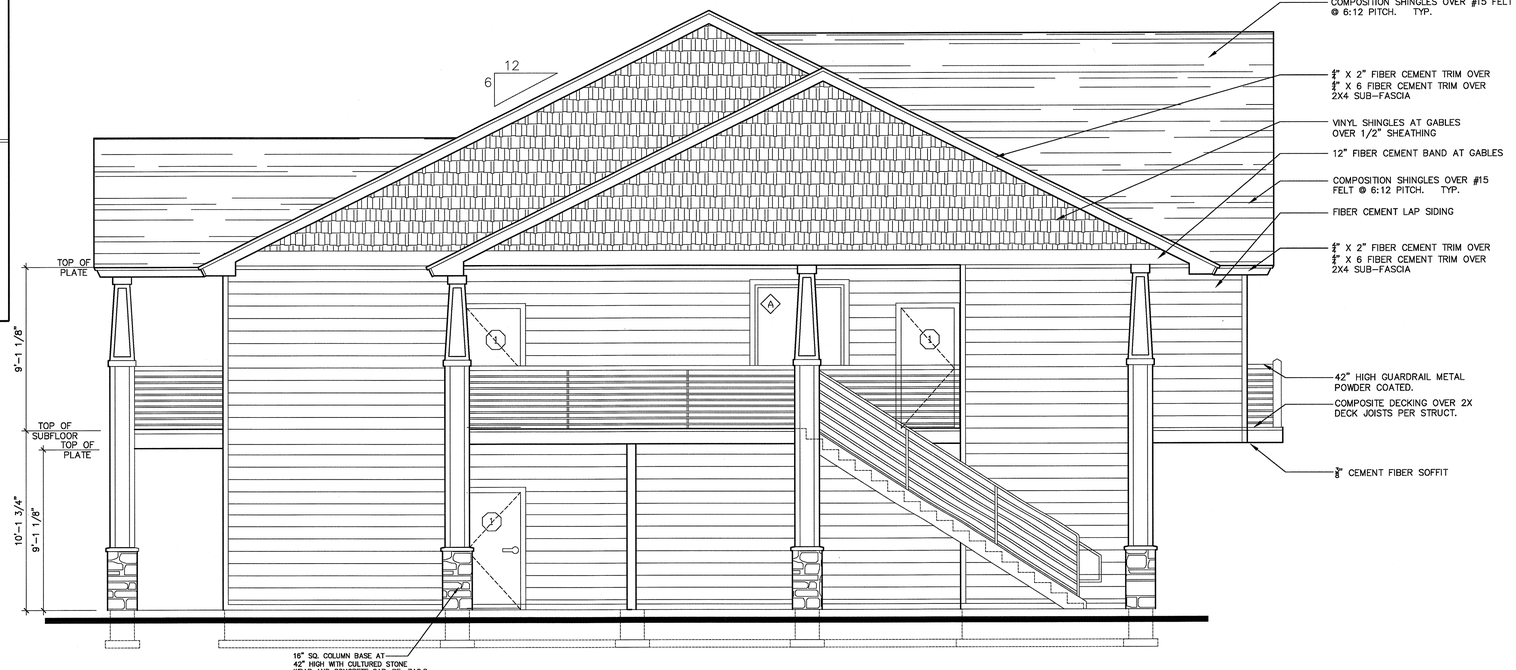

A A2.2 12-PLEX SIDE ELEVATION

0 2' 4' 8'

SCALE: 1/4"=1'-0"

REVISIONS

PROPOSED 12-PLEX BUILDING FOR:

LEGACY VILLAS

COUNRTY VISTA ROAD, LIBERTY LAKE, WA

WYATT ARCHITECTS AND ASSOCIATES

JAMES A. McARTHUR, A.I.A.

4205 South Crestline
Spokane, WA 99203
Phone 509-327-7363 Fax 509-327-7999
jallenmcarthur@gmail.com

Project Manager:
Lee Schwartzenburg
Box 1473
Spokane Valley, WA 99214
Phone 509-828-8801
leeschwartz@msn.com

1934 REGISTERED ARCHITECT
JAMES A. McARTHUR, JR.
STATE OF WASHINGTON

6-20-2016

SHEET TITLE:
12-PLEX ELEVATIONS & SCHEDULES

DRAWN BY:
LJS

PROJECT:
15:26

DATE:
6/20/2016

SHEET NO.
A2.2

A A2.3 12-PLEX FRONT ELEVATION

0 4' 8' 16'

SCALE: 1/8"=1'-0"

A A2.3 12-PLEX REAR ELEVATION

0 4' 8' 16'

SCALE: 1/8"=1'-0"

REVISIONS

PROPOSED 12-PLEX BUILDING FOR:

LEGACY VILLAS

COUNRTY VISTA ROAD, LIBERTY LAKE, WA

WYATT ARCHITECTS AND ASSOCIATES
JAMES A. McARTHUR, A.I.A.
4205 South Crestline
Spokane, WA 99203
Phone: 509-327-7943 / Fax: 509-327-7999
jallanmcarthur@gmail.com

Project Manager:
Lee J. Schwatrzenburg
PO Box 141713
Spokane Valley, WA 99214
Phone: 509-928-1850
lee@wyattarchitects.com

1934 REGISTERED ARCHITECT
JAMES A. McARTHUR, JR.
STATE OF WASHINGTON

6-20-2016

SHEET TITLE: 12-PLEX ELEVATIONS

DRAWN BY: LJS

PROJECT: 15:26

DATE: 6/20/2016

SHEET NO. A2.3

VENTILATION:
ENCLOSED ATTICS AND ENCLOSED RAFTER SPACES FORMED WHERE CEILINGS ARE APPLIED DIRECTLY TO THE UNDERSIDE OF ROOF RAFTERS SHALL HAVE CROSS VENTILATION FOR EACH SEPARATE SPACE BY VENTILATING OPENINGS PROTECTED AGAINST THE ENTRANCE OF RAIN AND SNOW. WHERE EAVE OR CORNICE VENTS ARE INSTALLED, INSULATION SHALL NOT BLOCK THE FREE FLOW OF AIR. A MINIMUM OF 1 INCH OF AIR SPACE SHALL BE PROVIDED BETWEEN THE INSULATION AND THE ROOF SHEATHING.

THE OPENING AREA MAY BE 1/300 OF THE AREA OF SPACE VENTILATED PER IBC SECTION 1203.2.

ATTIC VENTILATION:
AREA =11,021/300
=36.7 SQ. FT.
=5,290 SQ. IN.
PROVIDE 50% =2,645 SQ. IN.

PROVIDE 2,645 SQ. IN. @ RIDGE & ROOF VENTS AND 2,645 SQ.IN. @ SOFFIT VENT. MIN.

THERE IS 320 LINEAR FEET OF SOFFIT VENT ON THE BUILDING PERIMETER. THIS PROVIDES 1,600 SQ.IN. OF VENTING AT THE SOFFIT. THERE ARE 18 SQUARE ROOF VENTS @ 61 SQ. IN. EACH. THIS PROVIDES 1,098 SQ.IN. OF THE ADDITIONAL 1,045 SQ.IN. NEEDED TO COVER THE BALANCE FROM THE SOFFIT VENT REQUIREMENT. THERE IS 70 LINEAR FEET OF RIDGE VENT WHICH PROVIDES 1,400 SQ.IN. OF VENTING.

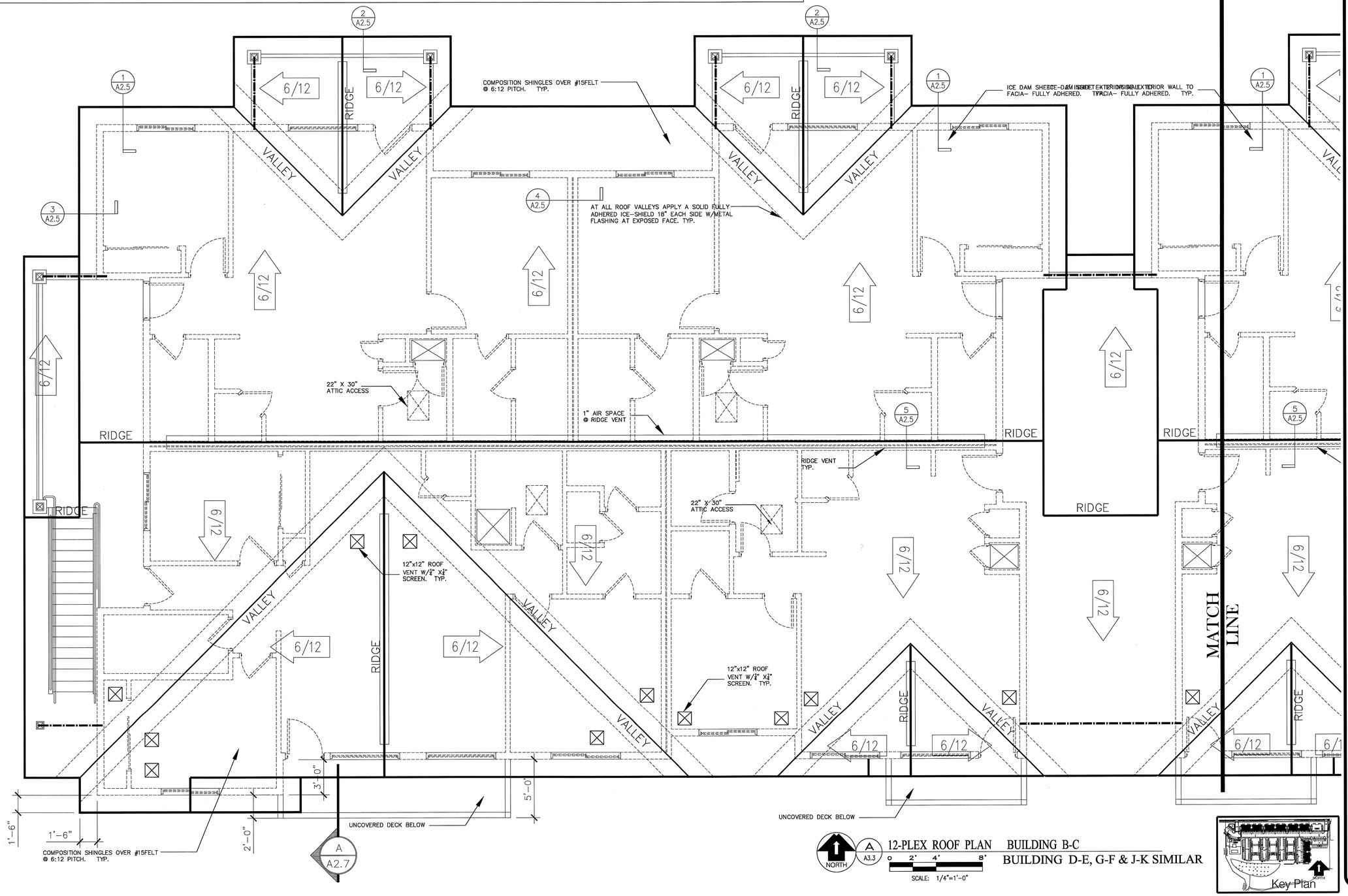

12-PLEX ROOF PLAN BUILDING B-C
BUILDING D-E, G-F & J-K SIMILAR

SCALE: 1/4"=1'-0"

REVISIONS

PROPOSED 12-PLEX BUILDING FOR:
LEGACY VILLAS
COUNRTY VISTA ROAD, LIBERTY LAKE, WA

WYATT ARCHITECTS AND ASSOCIATES
JAMES A. McARTHUR, A.I.A.
Project Manager:
Lee Schmatzenburg
15915 E. Wellesley
Spokane Valley, WA 99214
Phone 509.255-3580
leeschmatz@hotmail.com
4408 South Crestline
Spokane, WA 99203
Phone 509-327-7343 Fax 509-327-7999
Jallenmcarthur@gmail.com

1934 REGISTERED ARCHITECT
JAMES A. McARTHUR, JR.
STATE OF WASHINGTON
6-20-2016

SHEET TITLE:	12-PLEX ROOF PLAN
DRAWN BY:	LJS
PROJECT:	15:26
DATE:	6/20/2016
SHEET NO.	A2.4

KEY NOTES :

1. 2X6 TREATED PLATE W/ 5/8" DIA. X 10" A.B. @ 48" O.C.
2. 1/2" MAX. THRESHOLD HEIGHT – ALL GROUND FLOOR UNITS
3. 4" CONCRETE SLAB
4. (2) #4 BARS, CONTINUOUS. (RE: STRUCTURAL)
5. FINISH GRADE, SLOPE AWAY FROM BUILDING.
6. COMPACT EARTH TO 95%.
7. 6"X 6" POST – RE: STRUCTURAL
8. R–10 RIGID PERIMETER INSULATION, TO 24" BELOW SLAB
9. 1/2" R–3 EXTRUDED POLYSTYRENE THERMAL BREAK. TYP.
10. 4" CONCRETE SLAB ON COMPACTED SUBGRADE. SLOPE SLAB 1/8" PER FOOT AWAY FROM BUILDING.
11. NOT USED.
12. 2x PRESSURE TREATED SILL (W/ FIBERGLASS SILL).
13. 5/8" GWB OVER 6 MIL VAPOR BARRIER
14. 3/4" GYPCRETE FLOOR TOPPING ON 3/4" T & G O.S.B. ON 2x10 JOISTS @ 16" O.C.
15. H2.5A SEISMIC CLIPS EACH TRUSS EACH END
16. ASPHALT SHINGLES OVER 15# FELT (USE 30# FELT AT ALL EAVES) ON 1/2" O.S.B. SHEATHING.
17. INSULATED VINYL SLIDING GLASS WINDOW (LOW–E & ARGON GAS)
18. FIBER CEMENT SOFFIT BOARD AT BOTTOM OF DECK JOISTS, PAINTED
19. R–21 FACED BATT INSULATION W/ VAPOR BARRIER
20. 5/8" TYPE "X" GYPSUM BOARD OVER RESILIENT CHANNEL @ 12" O.C. ON BOTTOM CHORD OF ROOF TRUSS.
21. 2 LAYERS 5/8" TYPE "X" GYPSUM BOARD ON RESILIENT CHANNELS ON I–JOIST
22. SHOT PINS @ 48" O.C. (RE: STRUCTURAL)
23. 5/8" TYPE "X" GYPSUM BOARD ON SIDE OF STRUCTURAL GABLE TRUSS WITH VERTICALS @ 16" O.C. PROVIDED BY TRUSS SUPPLIER
24. CONTINUOUS 2x4 NAILER.
25. POWDER COATED GUARD RAIL W/ 42" MIN. HEIGHT A.F.F.
26. INSTALL DRAFT STOP BETWEEN EACH UNIT.
27. 3–1/2" BATT INSULATION
28. BLOWN INSULATION (R–38).
29. 2x4 STUDS (2 ROWS) @ 16" O.C. (STAGGER STUDS) W/ 1" AIR SPACE BETWEEN ROWS. (@ PARTY WALL).
30. 3/4" BLOCKOUT IN TOPPING
31. 12" FIBER CEMENT BAND AT GABLES
32. 5/8" GYPSUM BOARD, TYP.
33. GABLE END TRUSS
34. 2x4 STUDS (2 ROWS) @ 16" O.C. (STAGGER STUDS) W/ 5" AIR SPACE BETWEEN ROWS. (@ PARTY WALL).
35. 5/8" TYPE "X" GYPSUM BOARD
36. RAIN GUTTERS TYPICAL AT FRONT AND BACK OF ALL BUILDINGS OVER 2x6 FIR/LARCH. TYP.
37. MANUFACTURED TRUSSES @ 24" O.C. W/ "SIMPSON" H1 TRUSS ANCHOR AT EACH END. CONTRACTOR TO PROVIDE AND INSTALL TRUSS BLOCKING AND BRACING PER TRUSS MANUFACTURERS DESIGN.
38. 14" ENERGY HEEL MINIMUM. TYP. ALL TRUSSES.
39. SOLID BLOCKING BETWEEN ALL RAFTERS WITH HOLD DOWN 1–1/2" TO ALLOW FOR VENTILATION, W/BIRD SCREEN ABOVE.
40. INSULATION BAFFLE AT "FRIEZE" VENTS, ALLOW 2" CLEAR ABOVE INSULATION FOR VENTILATION. TYP.
41. 1/2 X 2" FIBER CEMENT TRIM OVER 1/2 X 6 FIBER CEMENT TRIM OVER 2X4 SUB–FASCIA
42. VENTED SOFFIT MATERIAL. TYP.
43. 1" AIR SPACE
44. 5" AIR SPACE
45. 6" LANDSCAPE GRADE CLEARANCE FROM WOOD 9" ROUGH GRADE BEFORE LANDSCAPING
46. CONTINUOUS BLOCKING
47. CONTINUE 5/8" GYP. BD. TO ROOF DECK ON BACK SIDE OF TRUSS MEMBER.
48. SOLID BLOCKING AT ALL FLOORS, TYPICAL ALL BUILDINGS.
49. PAINTED
50. CLOSED SOFFIT WITH 3/8" FIBER CEMENT SOFFIT BOARD
51. 2x4 STUDS.
52. 3–3/4" LIGHT WEIGHT CONCRETE TAPER TO 3" OVER 60 FULLY ADHERED MEMBRANE
53. REFER TO STRUCTURAL.
54. FIBER CEMENT LAP SIDING OVER BUILDING WRAP PER MANUF. SPECS. TYP.
55. R–30 INSULATION
56. SOLID FULLY ADHERED ICE–SHIELD LAYER TO 24" INSIDE INTERIOR WALL FACE OF EXTERIOR WALLS, TYPICAL ALL BUILDINGS.
57. VINYL SHINGLES AT GABLES
58. 60 MIL FULLY ADHERED MEMBRANE 12" UP SHEATHING AT DECK PERIMETER

STRUCTURAL SHEAR WALL SCHEDULE SHALL OVERRIDE THE ARCHITECTURAL DETAILS AS PER DRYWALL AND SHEATHING LOCATIONS.

NOTE:
THE STRUCTURAL DOCUMENTS TAKE PRECEDENCE OVER THE ARCHITECTURAL IN REGUARDS TO ANY STRUCTURAL ITEMS.

INSTALL AN ACTIVE RADON SYSTEM IN EACH BUILDING

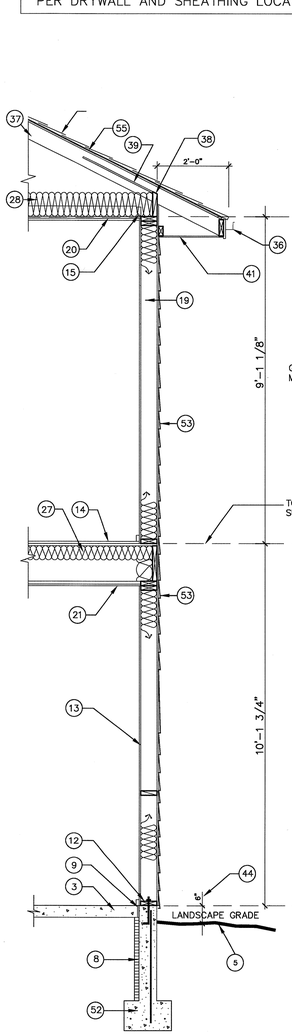

1 WALL SECTION
1/2" = 1'–0"

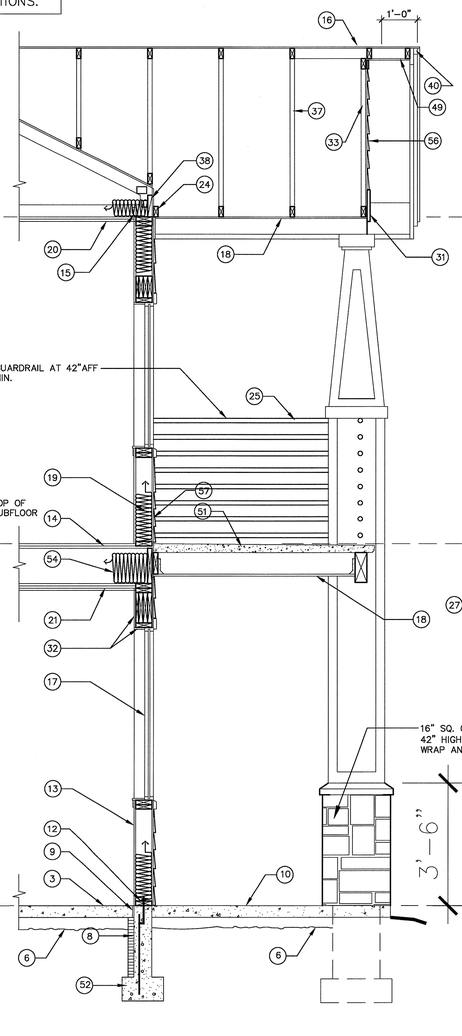

2 WALL SECTION
1/2" = 1'–0"

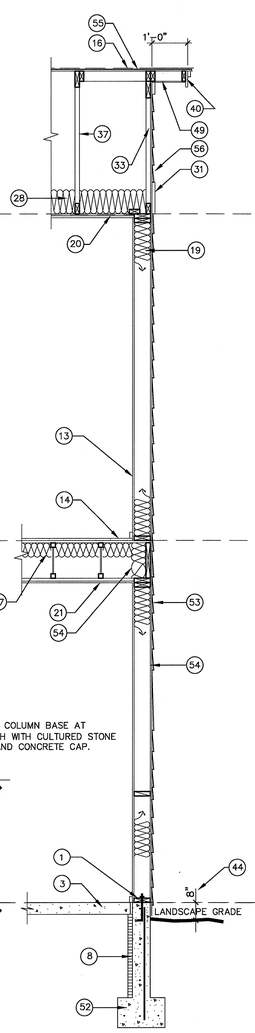

3 WALL SECTION
1/2" = 1'–0"

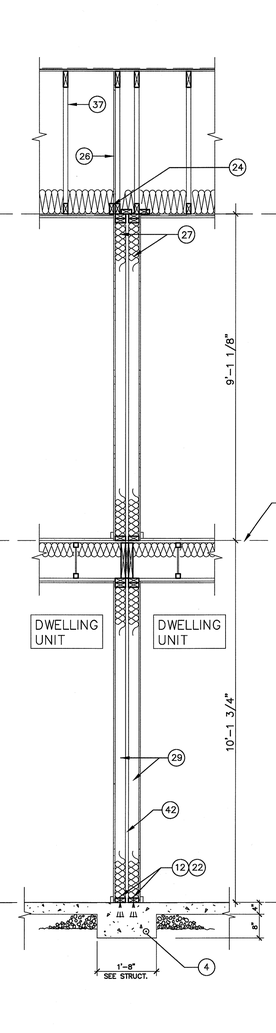

4 WALL SECTION 1–HR
1/2" = 1'–0"

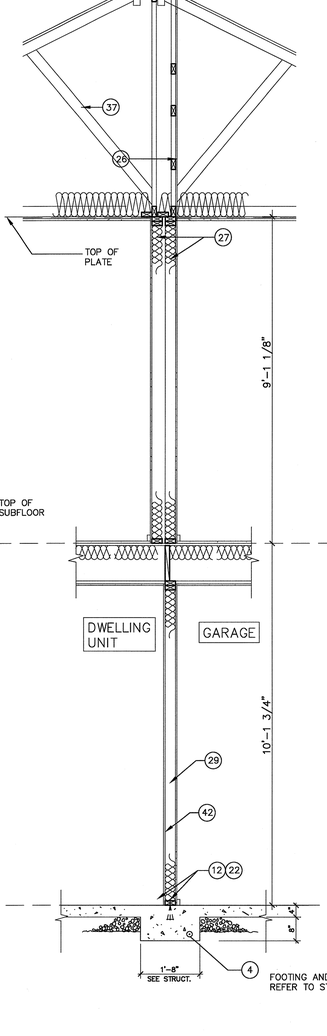

5 WALL SECTION 1–HR
1/2" = 1'–0"

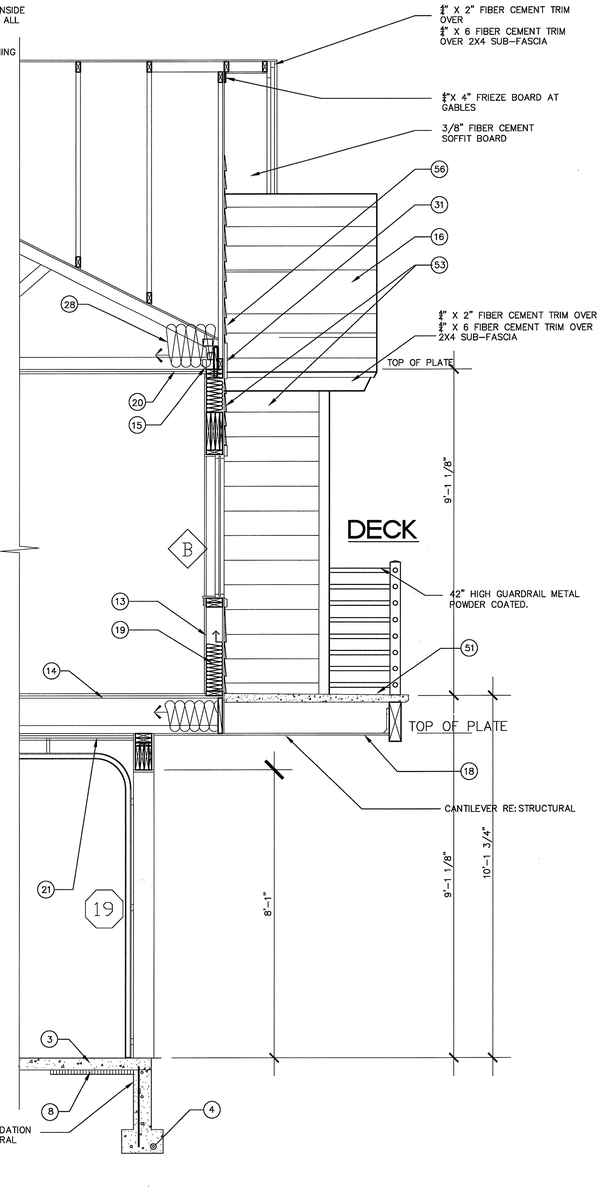

6 WALL SECTION
1/2" = 1'–0"

REVISIONS

PROPOSED 12-PLEX BUILDING FOR:
LEGACY VILLAS
COUNRTY VISTA ROAD, LIBERTY LAKE, WA

WYATT ARCHITECTS AND ASSOCIATES
JAMES A. McARTHUR, A.I.A.
4407 East Mission Ave. Suite 1
Spokane, WA 99202
Phone 509-327-7543 Fax 509-327-7999
jaliamcarthur@gmail.com

Project Manager:
Lee Schwartzenburg
P.O. Box 1405
Spokane Valley, WA 99214
Phone 509-218-3850
leeroyalties@ctcis.com

1934 REGISTERED ARCHITECT
JAMES A. McARTHUR, JR.
STATE OF WASHINGTON
6-20-2016

SHEET TITLE:	12–PLEX WALL SECTIONS
DRAWN BY:	LJS
PROJECT:	15:26
DATE:	6/20/2016
SHEET NO.	A2.5

(C) TUB / WALL SURROUND
SCALE : 3" = 1'–0"

(B) TUB/ WALL
SCALE : 3" = 1'–0"

TO ELIMINATE GYPSUM BORAD BETWEEN JOISTS, BOX IN FAN ON ALL SIDES WITH GYPSUM BOARD. CUT A HOLE IN GYPSUM BOARD TO ALLOW FOR A 26 GAGE METAL DUCT TO EXTERIOR.

(A) TYPICAL PENETRATION @ 1-HR FLOOR
SCALE : 3" = 1'–0"

System No. F-C-2039
May 18, 2005
F Rating - 1 Hr
T Ratings - 0 & 1 Hr (See Item 2)

1. Floor Assembly – The 1 hr fire rated wood truss or combination wood and steel truss Floor-Ceiling assembly shall be constructed of the materials and in the manner described in the individual L500 Series Design in the UL Fire Resistance Directory, as summarized below:

A. Joists – Nom 10 in. (254 mm) deep (or deeper) lumber, steel or combination lumber and steel joists, trusses or **Structural Wood Members*** with bridging as required and ends firestopped.
B. Flooring System – Lumber or plywood subfloor with finish floor of lumber, plywood or **Floor Topping Mixture*** as specified in the individual Floor-Ceiling Design. Diameter of opening shall be 5/8 in. (16 mm) larger than the outside diam of nonmetallic pipe or conduit (Item 2).
C. Gypsum Board* – Nom a 4 ft (122 cm) wide by 5/8 in. (16 mm) thick, screw-attached to furring channels. Diameter of opening shall be 5/8 in. (16 mm) larger than the outside diam of nonmetallic pipe or conduit (Item 2).

1.1 Chase Wall (Optional, not shown) – The through penetrants (Item 2) may be routed through a 1 hr fire-rated single, double or staggered wood stud/gypsum wallboard chase wall constructed of the materials and in the manner specified in the individual U300 Series Wall and Partition Designs in the UL Fire Resistance Directory and shall include the following construction features:

A. Studs – Nom 2 in. by 6 in. (51 mm by 152 mm) or double nom 2 in. by 4 in. (51 mm by 102 mm) lumber studs.
B. Sole Plate – Nom 2 in. by 6 in. (51 mm by 152 mm) or parallel 2 in. by 4 in. (51 mm by 102 mm) lumber plates, tightly butted.
C. Top Plate – The double top plate shall consist of two nom 2 in. by 6 in. (51 mm by 152 mm) or two sets of parallel 2 in. by 4 in. (51 mm by 102 mm) lumber plates, tightly butted. Diameter of opening shall be 5/8 in. (16 mm) larger than outside diam of nonmetallic pipe or conduit.
D. Gypsum Board* – Thickness, type, number of layers and fasteners shall be as specified in individual Wall and Partition Design.

2. Through Penetrants – One nonmetallic pipe, tubing or conduit to be installed concentrically or eccentrically within the firestop system. Annular space between pipe, tubing or conduit and edge of opening to be min 0 in. (point contact) and max 5/8 in. (0 mm to max 16 mm). Pipe, tubing or conduit to be rigidly supported on both sides of floor-ceiling assembly. The following types and sizes of nonmetallic pipes, tubing or conduit may be used:

A. Polyvinyl Chloride (PVC) Pipe – Nom 1-1/2 in. (38 mm) diam (or smaller) Schedule 40 solid core PVC pipe for use in closed (process or supply) or vented (drain, waste or vent) piping system.
B. Rigid Nonmetallic Conduit++ – Nom 1-1/2 in. (38 mm) diam (or smaller) Schedule 40 solid core PVC conduit installed in accordance with Article 347 of the National Electrical Code (NFPA No. 70).
C. Chlorinated Polyvinyl Chloride (CPVC) Pipe – Nom 1-1/2 in. (38 mm) diam (or smaller) SDR13.5 CPVC pipe for use in closed (process or supply) piping systems.
D. Cellular Core Polyvinyl Chloride (ccPVC) Pipe – Nom 1-1/2 in. (38 mm) diam (or smaller) Schedule 40 cellular core PVC pipe for use in closed (process or supply) or vented (drain, waste or vent) piping system.
E. Acrylonitrile Butadiene Styrene (ABS) Pipe – Nom 1-1/2 in. (38 mm) diam (or smaller) Schedule 40 solid core ABS pipe for use in closed (process or supply) or vented (drain, waste or vent) piping system.
F. Cellular Core Acrylonitrile Butadiene Styrene (ccABS) Pipe – Nom 1-1/2 in. (38 mm) diam (or smaller) Schedule 40 cellular core ABS pipe for use in closed (process or supply) or vented (drain, waste or vent) piping system.
G. Crosslink Polythylene (PGX) Tube – Nom 1 in. (25 mm) diam (or smaller) SDR 9 PEX tube for use in closed (process or supply) piping system.
H. Electrical Nonmetallic (ENT) Tubing+ – Nom 1-1/4 in. (32 mm) diam (or smaller) corrugated wall electrical nonmetallic tubing constructed of polyvinyl chloride. ENT to be installed as a complete system with all terminations in junction boxes, outlet boxes or other approved enclosures as specified in the National Electrical Code.

The hourly T Rating is 1 Hr when pipes/conduits A, B, C , G or H are used.
The hourly T Rating is 0 Hr when pipes D, E or F are used.

3. Fill,Void or Cavity Materials* - Caulk, Sealant or Putty – Min 3/4 in. (19 mm) thickness of fill material applied within the annulus, flush with top surface of floor or sole plate. Min 5/8 in. (16 mm) thickness of fill material applied within the annulus, flush with bottom surface of ceiling or top plate. An additional min 1/4 in. (6 mm) crown of fill material applied to perimeter of penetrant at its egress from the top of flooring and underside of ceiling or from top of sole plate and underside of top plate.

3M COMPANY – CP 25WB+, IC 15WB+ caulk, FB-3000 WT sealant or MP+ Stix putty
(Note: CP 25WB+ not suitable for use with CPVC pipes.)

*Bearing the UL Classification Marking
++Bearing the UL Listing Mark

SECTION A-A

System No. F-C-2116
May 20, 2005
F Rating - 1 Hr
T Rating - 3/4 Hr

1. Floor Assembly – The 1 hr fire rated wood truss or combination wood and steel truss Floor-Ceiling assembly shall be constructed of the materials and in the manner described in the individual L500 Series Design in the UL Fire Resistance Directory, as summarized below:

A. Flooring System – Lumber or plywood subfloor with finish floor of lumber, plywood or **Floor Topping Mixture*** as specified in the individual Floor-Ceiling Design. Diam of opening shall be 1 in. (25 mm) larger than the nom diam of through penetrant (Item 3).
B. Joists – Nom 10 in. (254 mm) deep (or deeper) lumber, steel or combination lumber and steel joists, trusses or **Structural Wood Members*** with bridging as required and ends firestopped.
C. **Gypsum Board*** – Nom 4 ft (122 cm) wide by 5/8 in. (16 mm) thick as specified in the individual Floor-Ceiling Design. Wallboard nailed to wood joists.

2. Chase Wall – The through penetrant (Item No. 3) shall be routed through a 1 hr fire rated single, double or staggered wood studs/gypsum wallboard chase wall constructed of the materials and in the manner specified in the individual U300 Series Wall and Partition Designs in the UL Fire Resistance Directory and shall include the following construction features:

A. Studs – Nom 2 by 6 in. (51 mm by 152 mm) or double nom 2 by 4 in. (51 mm by 102 mm) lumber studs.
B. Sole Plate – Nom 2 by 6 in. (51 mm by 152 mm) or parallel 2 by 4 in. (51 mm by 102 mm) lumber plates, tightly butted. Diam of opening shall be 1 in. (25 mm) larger than the nom diam of through penetrant (Item 3).
C. Top Plate – The double top plate shall consist of two nom 2 by 6 in. (51 mm by 152 mm) or two sets of parallel 2 by 4 in. (51 mm by 102 mm) lumber plates, tightly butted. Diam of opening shall be 1 in. (25 mm) larger than the nom diam of through penetrant (Item 3).
D. Gypsum Board* – Thickness, type, number of layers and fasteners shall be as specified in individual Wall and Partition Design.

3. Through Penetrants – One nonmetallic pipe or conduit to be centered within the firestop system. Pipe or conduit to be rigidly supported on both sides of floor-ceiling assembly. The following types and sizes of nonmetallic pipes may be used:

A. Polyvinyl Chloride (PVC) Pipe – Nom 3 in. (76 mm) diam (or smaller) Schedule 40 solid core or cellular core PVC pipe for use in closed (process or supply) or vented (drain, waste or vent) piping system.
B. Chlorinated Polyvinyl Chloride (CPVC) Pipe – Nom 3 in. (76 mm) diam (or smaller) SDR13.5 CPVC pipe for use in closed (process or supply) piping systems.
C. Acrylonitrile Butadiene Styrene (ABS) Pipe – Nom 3 in. (76 mm) diam (or smaller) Schedule 40 solid core or cellular core ABS pipe for use in closed (process or supply) or vented (drain, waste or vent) piping systems.
D. Rigid Nonmetallic Conduit++ – Nom 3 in. (76 mm) diam (or smaller) Schedule 40 PVC conduit installed in accordance with Article 347 of the National Electrical Code (NFPA No. 70).

4. Firestop System – The details of the firestop system shall be as follows:

A. Fill,Void or Cavity Materials* - Wrap Strip – Nom 1/4 in. (6 mm) thick intumescent elastomeric material faced on one side with aluminum foil, supplied in 2 in. (51 mm) wide strips. One layer of wrap strip tightly wrapped around penetrant (foil side exposed) and held in place with foil tape. Wrap strip recessed into opening such that bottom edge of wrap strip is flush with bottom of lower top plate.

3M COMPANY – FS-195+

B. Fill,Void or Cavity Materials* - Caulk or Sealant – Min 1/2 in. (13 mm) thickness of caulk applied within the annulus, flush with top surface of floor or top surface of sole plate.

3M COMPANY – CP 25WB+ caulk or FB-3000 WT sealant
(Note: CP 25WB+ not suitable for use with CPVC pipes.)

C. Foil Tape – Min of one wrap of nom 4 in. (102 mm) wide, 3 mil thick aluminum tape wrapped around penetrant flush with bottom of lower top plate and proceeding downward.

++Bearing the UL Listing Mark
*Bearing the UL Classification Marking

System No. F-C-2134
May 20, 2005
F Rating - 1 Hr
T Rating - 3/4 Hr

1. Floor Assembly – The 1 hr fire rated wood truss or combination wood and steel truss Floor-Ceiling assembly shall be constructed of the materials and in the manner described in the individual L500 Series Design in the UL Fire Resistance Directory, as summarized below:

A. Flooring System – Lumber or plywood subfloor with finish floor of lumber, plywood or Floor Topping Mixture* as specified in the individual Floor-Ceiling Design. Diam of opening shall be equal to or max 1 in. larger than the outside diam of nonmetallic pipe (Items 3 and 4).
B. Joists – Nom 10 in. deep (or deeper) lumber, steel or combination lumber and steel joists, trusses or **Structural Wood Members*** with bridging as required and ends firestopped.
C. Gypsum Board* – Nom 4 ft wide by 5/8 in. (16 mm) thick, attached as described in the individual Floor-Ceiling Design.

2. Chase Wall – The through penetrant (Item No. 3) shall be routed through a 1 hr fire-rated single, double or staggered wood studs/gypsum wallboard chase wall constructed of the materials and in the manner specified in the individual U300 Series Wall and Partition Designs in the UL Fire Resistance Directory and shall include the following construction features:

A. Studs – Nom 2 by 6 in. (51 by 152 mm) or double nom 2 by 4 in. (51 by 102 mm) lumber studs.
B. Sole Plate – Nom 2 (51 mm) by 6 in. (51 by 152 mm) or parallel 2 by 4 in. (51 by 102 mm) lumber plates, tightly butted.
C. Top Plate – The double top plate shall consist of two nom 2 by 6 in. (51 by 152 mm) or two sets of parallel 2 by 4 in. (51 by 102 mm) lumber plates, tightly butted. Diam of opening shall be equal to or max 1 in. (25 mm) larger than the outside diam of nonmetallic pipe or conduit (Item 3).
D. Gypsum Board* – Thickness, type, number of layers and fasteners shall be as specified in individual Wall and Partition Design.

3. Through Penetrant – One nonmetallic pipe to be installed within the firestop system. Pipe to be rigidly supported on both sides of floor-ceiling assembly. The annular space between pipe and periphery of opening shall be min 0 in. (point contact) to max 1/2 in. (0 to max 13 mm).Pipe may be installed with continuous point contact. The following types and sizes of nonmetallic pipes may be used:

A. Polyvinyl Chloride (PVC) Pipe – Nom 4 in. (102 mm) diam (or smaller) Schedule 40 solid core PVC pipe for use in closed (process or supply) or vented (drain, waste or vent) piping system.
B. Cellular Core Polyvinyl Chloride (ccPVC) Pipe – Nom 4 in. (102 mm) diam (or smaller) Schedule 40 cellular core PVC pipe for use in closed (process or supply) or vented (drain, waste or vent) piping system.
C. Acrylonitrile Butadiene Styrene (ABS) Pipe – Nom 4 in. (102 mm) diam (or smaller) Schedule 40 solid core ABS pipe for use in closed (process or supply) or vented (drain, waste or vent) piping system.
D. Cellular Core Acrylonitrile Butadiene Styrene (ccABS) Pipe – Nom 4 in. (102 mm) diam (or smaller) Schedule 40 cellular core ABS pipe for use in closed (process or supply) or vented (drain, waste or vent) piping system.

4. Branch Piping – (Optional) One nonmetallic pipe to be connected to through penetrant (Item 3) and installed within opening in subfloor or wallboard plate. The annular space between pipe and periphery of opening shall be min 0 in. (point contact) to max 1/2 in. (0 to max 13 mm) Pipe may be installed with continuous point contact . The following types and sizes of nonmetallic pipes may be used:

A. Polyvinyl Chloride (PVC) Pipe – Nom 3 in. diam (or smaller) Schedule 40 solid core PVC pipe for use in closed (process or supply) or vented (drain, waste or vent) piping system.
B. Cellular Core Polyvinyl Chloride (ccPVC) Pipe – Nom 3 in. diam (or smaller) Schedule 40 cellular core PVC pipe for use in closed (process or supply) or vented (drain, waste or vent) piping system.
C. Acrylonitrile Butadiene Styrene (ABS) Pipe – Nom 3 in. diam (or smaller) Schedule 40 solid core ABS pipe for use in closed (process or supply) or vented (drain, waste or vent) piping systems.
D. Cellular Core Acrylonitrile Butadiene Styrene (ccABS) Pipe – Nom 3 in. (76 mm) diam (or smaller) Schedule 40 cellular core ABS pipe for use in closed (process or supply) or vented (drain, waste or vent) piping system.

5. Fill,Void or Cavity Materials* - Caulk or Sealant – Min 3/4 in. (19 mm) thickness of caulk applied within annular space around perimeter of through penetrant (Item 3), flush with top surface of floor or sole plate and flush with bottom surface of top plate. Min 3/4 in. thickness of caulk applied within annular space around perimeter of branch piping (Item 4), flush with top surface of floor. Min 1/2 in. diam bead applied at the pipe/floor interface and the pipe/wallboard or plate interface.

3M COMPANY – CP 25WB+ caulk, IC 15WB+ caulk, FD-150+ sealant or FB-3000 WT sealant

*Bearing the UL Classification Mark

REVISIONS

PROPOSED 12-PLEX BUILDING FOR:
LEGACY VILLAS
COUNRTY VISTA ROAD, LIBERTY LAKE, WA

WYATT ARCHITECTS AND ASSOCIATES
Project Manager:
Lee J. Schwatrzenburg
PO Box 141713
Spokane Valley, WA 99214
Phone: 509-928-1860
lee@wyattarchitects.com

JAMES A. McARTHUR, A.I.A.
4205 South Crestline
Spokane, WA 99203
Phone: 509-327-7943 / Fax: 509-327-7999
jalanmcarthur@gmail.com

1934 REGISTERED ARCHITECT
JAMES A. McARTHUR, JR.
STATE OF WASHINGTON
6-20-2016

SHEET TITLE: BUILDING DETAILS

DRAWN BY: LJS

PROJECT: 15:26

DATE: 6/20/2016

SHEET NO. A2.6

KEY NOTES:

1. PRECAST STAIR TREAD, CHAMFER NOSING, BROOM FINISH
2. STAIR STRINGER
3. ANGLE TREAD CLIP, BOLT TO STRINGER
4. METAL RAIL – POWDER COATED
5. HORIZONTIAL 1" DIA. METAL TUBES AT 4" O.C. POWDER COATED
6. 1–1/2" METAL ANGLE. RE: STRUCTURAL
7. REFER TO STRUCTURAL
8. 3x3x3/6x0'–6" ANGLE W/ (2) 5/8" DIA. LAG BOLTS TO STRINGERS & (2) 5/8"x5" EXPANSION BOLTS AT SLAB. PER STRUCTURAL
9. 3–3/4" CONCRETE AT DOORS SLOPED TO 3" @ DECK EDGE (ALL CONCRETE SHALL SLOPES AWAY FROM BUILDING)
10. 3–3/4" CONCRETE W/FIBER MESH ON 60 MIL MEMBRANE ON 3/4" EXTERIOIR GRADE T&G SHTG.
11. 60 MIL MEMBRANE EXTEND ½" BEYOND TRIM & UP SHEATHING 12" – FULLY ADHERED
12. LEDGER (REFER TO STRUCTURAL)
13. 3/8" PRE–PRIMED TRIM WRAP
14. HEADER – REFER TO STRUCTURAL
15. (3) 2x10 HEADERS –– REFER TO STRUCTURAL
16. 6" ANGLE BOLTED EA. LEG TO STRINGER & HEADER REFER TO STRUCTURAL
17. LAP SIDING – PRE–PRIMED
18. 3/4" CHAMFER
19. 24 GAGE PRE–FINISHED "Z" FLASHING.
20. THRESHOLD SET IN SEALANT.
21. 3" ANGLE W/ 5/8" DIA. BOLTS EA. LEG TO TO STRINGER & HEADER. (STRUCTURAL)
22. TREATED 2X JOISTS – REFER TO STRUCTURAL
23. HARDI SOFFIT BD. (TYP. @ LANDINGS) PAINT
24. 1 LAYER 3/8" SOFFIT BD.
25. 1 LAYER 5/8" GYP. BD. OVER 6 MIL VAPOR BARRIER
26. 60 MIL MEMBRANE AT LANDINGS AND DECKS
27. ADJUSTABLE DOOR BOTTOM W/DOOR SWEEP
28. 1 1/2"x 1 1/2" CORNER FLASH'G CONTINUOUS
29. MAX. 1/2" BEVEL, TYP.
30. BENT METAL FLASHING 2" AND 5"

SPACING OF ALL PICKETS AND RAILS NOT TO ALLOW 4" SPHERE TO PASS THROUGH. TYP.

INSTALL RAILING TO SUSTAIN A 200# POINT LOAD ALONG THE TOP RAIL APPLIED HORIZONTALLY. TYP.

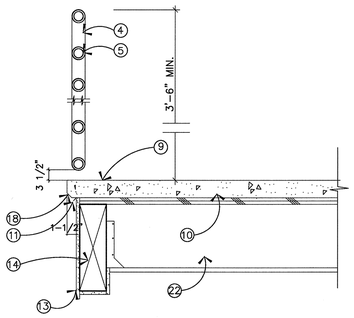

2 LANDING and DECK EDGE DETAIL
SCALE : 1–1/2" = 1'–0"

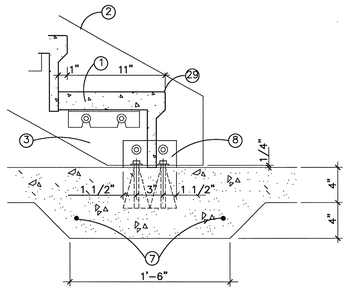

3 STAIR DETAIL
SCALE : 1–1/2" = 1'–0"

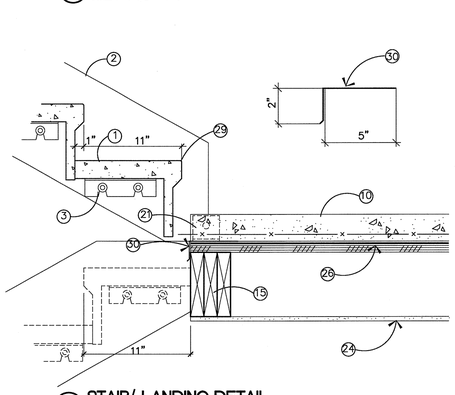

4 STAIR/ LANDING DETAIL
SCALE : 1–1/2" = 1'–0"

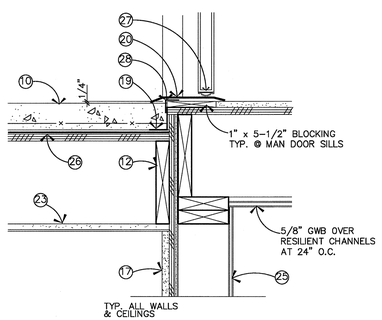

5 LANDING DETAIL
SCALE : 1–1/2" = 1'–0"

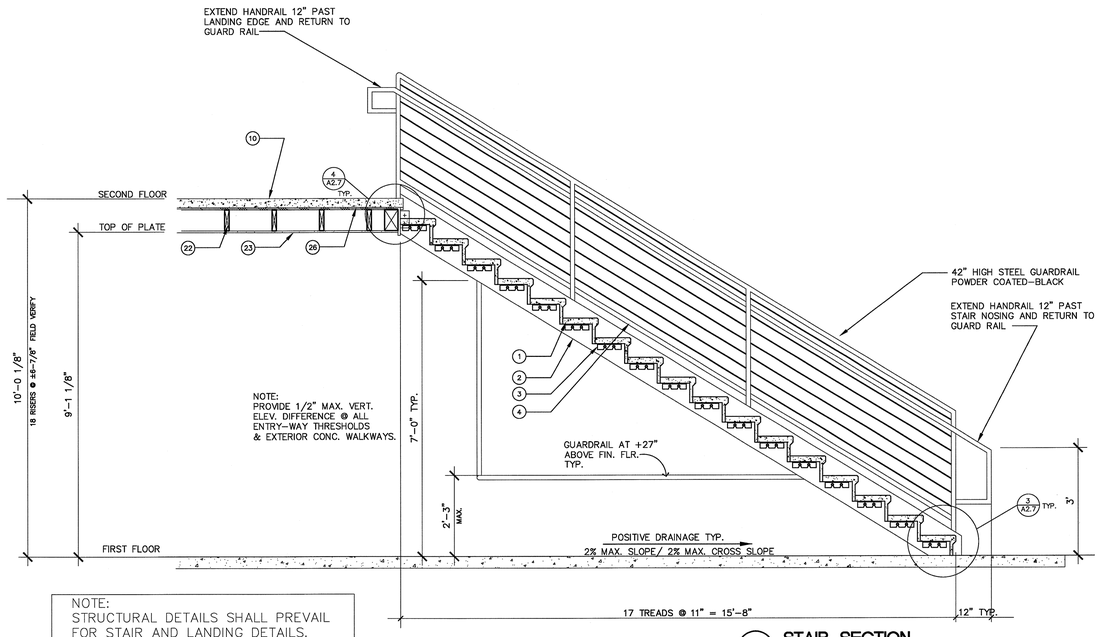

NOTE:
STRUCTURAL DETAILS SHALL PREVAIL FOR STAIR AND LANDING DETAILS.

1 STAIR SECTION
SCALE: 1/2" = 1'–0"

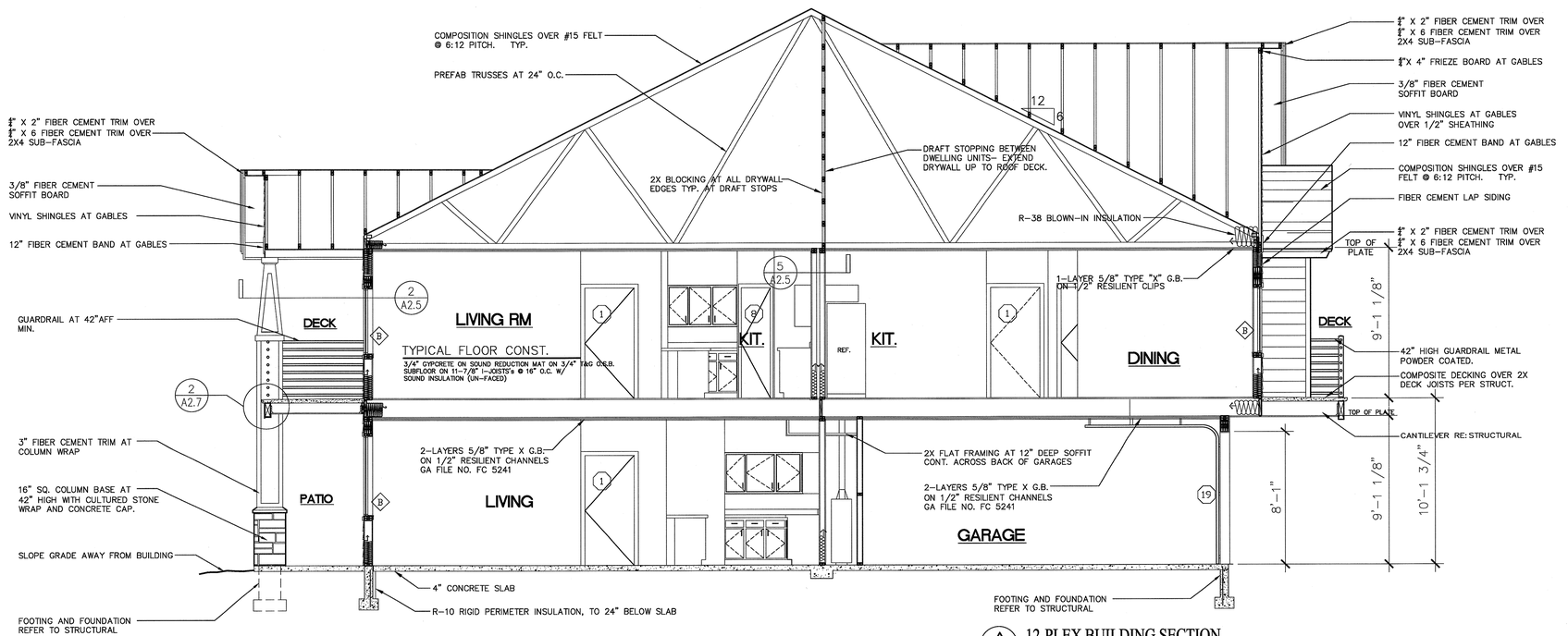

A 12-PLEX BUILDING SECTION
A2.7
0 2' 4' 8'
SCALE: 1/4"=1'–0"

REVISIONS

PROPOSED 12-PLEX BUILDING FOR:
LEGACY VILLAS
COUNRTY VISTA ROAD, LIBERTY LAKE, WA

WYATT ARCHITECTS AND ASSOCIATES
JAMES A. McARTHUR, A.I.A.
Project Manager:
Lee J. Schwartzenburg
Lic. No. 14007
Spokane Valley, WA 99214
Phone 509-928-3560
leeschwartz@hotmail.com
4205 South Greenleaf
Spokane, WA 99203
Phone 509-327-7343 Fax 509-327-7999
jallenmcarthur@gmail.com

1934 REGISTERED ARCHITECT
JAMES A. McARTHUR, JR.
STATE OF WASHINGTON
6-20-2016

SHEET TITLE:
BUILDING SECTION
STAIR DETAILS

DRAWN BY: LJS

PROJECT: 15:26

DATE: 6/20/2016

SHEET NO.
A2.7

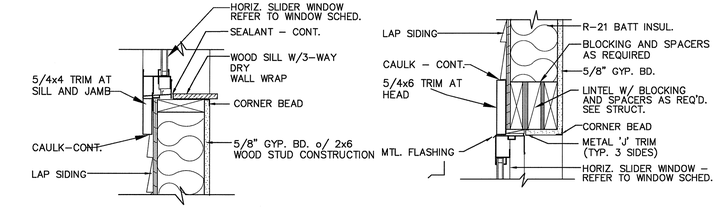

SILL 1–1/2" = 1'–0" EXTERIOR 2 A2.8

HEAD (JAMB SIMILAR) 1–1/2" = 1'–0" EXTERIOR 1 A2.8

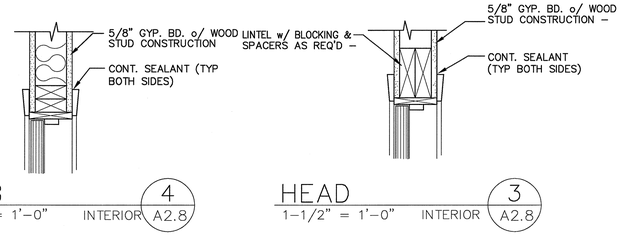

JAMB 1–1/2" = 1'–0" INTERIOR 4 A2.8

HEAD 1–1/2" = 1'–0" INTERIOR 3 A2.8

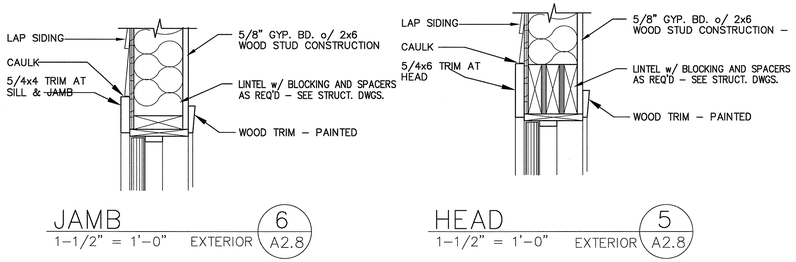

JAMB 1–1/2" = 1'–0" EXTERIOR 6 A2.8

HEAD 1–1/2" = 1'–0" EXTERIOR 5 A2.8

INSTALL CULTURED STONE PER MANUFACTURERS SPECIFICATIONS.

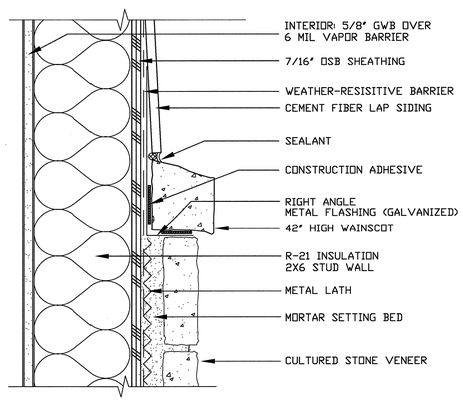

CULTURED STONE 3" = 1'–0" 7 A2.8

ul design no. p533 1 HOUR FIRE

WOOD ROOF TRUSSES, RESILIENT CHANNELS, GLASS FIBER INSULATION,GYPSUM WALLBOARD

ONE LAYER $\frac{5}{8}$" TYPE X GYPSUM BOARD APPLIED AT RIGHT ANGLES TO RESILIENT FURRING CHANNELS 12" O.C. WITH $1\frac{1}{8}$" TYPE S DRYWALL SCREWS 8" O.C. GYPSUM BOARD END JOINTS ATTACHED WITH SCREWS 8" O.C. TO ADDITIONAL PIECES OF CHANNEL 60" LONG LOCATED 3" BACK ON EITHER SIDE OF END JOINT. RESILIENT CHANNELS APPLIED AT RIGHT ANGLES TO BOTTOM OF CHORD OF PITCHED WOOD TRUSSES 24" O.C. WITH $1\frac{1}{4}$" TYPE S OR W SCREWS. GLASS FIBER OR MINERAL FIBER BATT OR LOOSE FILL INSULATION APPLIED DIRECTLY OVER GYPSUM BOARD. TRUSSES SUPPORTED $\frac{15}{32}$" PLYWOOD OR OSB ROOF SHEATHING APPLIED AT RIGHT ANGLES TO TRUSSES AND 6d RING SHANK NAILS 12" O.C.

CELING AT ROOF TRUSS

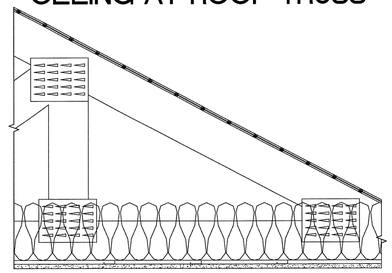

GA FILE NO. WP 3605 1 HOUR FIRE

GYPSUM WALLBOARD, WOOD STUDS

ONE LAYER 5/8" TYPE X PLAIN OR PREDECORATED GYPSUM WALLBOARD, WATER–RESUSTANT GYPSUM BACKING BOARD OR GYPSUM VENEER BASE APPLIED PARALLEL OR AT RIGHT ANGLES TO EACH SIDE OF 2X4 WOOD STUDS 16" O.C. WITH 6d COATED NAILS, 1–7/8" LONG, 0.0915" SHANK, 1/4" HEADS, 7" O.C. JOINTS OF SQUARE EDGE, BEVEL EDGE OR PREDECOTATED WALLBOARD MAY BE LEFT EXPOSED.

JOINTS STAGGERED 16" ON OPPOSITE SIDES (LOAD– BEARING)

WALL BETWEEN GARAGE AND DWELLING

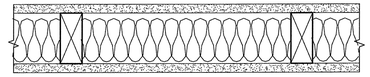

UL DESIGN NO. L570 1 HOUR FIRE 55 TO 54 STC SOUND

WOOD I-JOISTS, GYPSUM WALLBOARD, RESILENT CHANNELS

BASE LAYER 1/2" TYPE X GYPSUM WALL BOARD APPLIED AT RIGHT ANGLES TO RESILIENT CHANNELS 16" O.C. WITH 1–1/4" TYPE S DRYWALL SCREWS 12" O.C. RESILIENT CHANNELS APPLIED AT RIGHT ANGLES TO MINIMUM 9–1/2" DEEP WOOD I–JOISTS WITH MINIMUM 1–1/4" DEEP X 1–1/2" WIDE FLANGES AND MINUM 3/8" WEBS 24" O.C. WITH 1–1/4" TYPE W DRYWALL SCREWS. FACE LAYER 1/2" TYPE X GYPSUM WALL BOARD APPLIED AT RIGHT ANGLES TO CHANNELS WITH 1–5/8" TYPE S DRYWALL SCREWS 12" O.C. FACE LAYER END JOINTS LOCATED MIDWAY BETWEEN CHANNELS AND ATTACHED TO BASE LATER WITH 1–1/2" TYPE G SCREWS 12" O.C. EDGE JOINTS OFFSET 24" FROM BASE LAYER EDGE JOINTS. WOOD I–JOISTS SUPPORTING 5/8" ORIENTED STRAND BOARD APPLIED AT RIGHT ANGLES TO I–JOISTS WITH 8d COMMON NAILS 12" O.C.

STC AND ICC TESTED WITH 3/4" GYPSUM CONCRETE UNDERLAYMENT, SOUND MAT AND 3–1/2" GLASS FIBER INSULATION
SOUND TEST: NRCC B–3150.3, 6–30–00 (50 VINYL FLOOR COVERING)

FLOOR ASSEMBLY

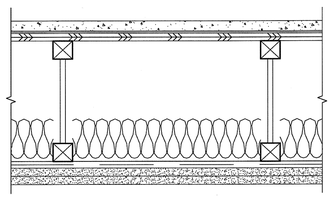

INSTALL SOUND MAT UNDER VINYL FLOORING ONLY. NOT UNDER CARPET AND PAD.

GA FILE NO. WP 3370 1 HOUR FIRE SOUND 45 TO 49 STC (57 stc)

GYPSUM WALLBOARD, DOUBLE WOOD STUDS

ONE LAYER 5/8" PROPRIETARY TYPE X GYPSUM VENEER OR GYPSUM VENEER BASE APPLIED PARALLEL OR AT RIGHT ANGLES TO EACH SIDE OF DOUBLE ROW OF 2X4 WOOD STUDS 16" O.C. ON SEPERATE PLATES 1" APART WITH 6D COATED NAILS, 1⅞" LONG, 0.0915" SHANK, ¼" HEADS, 7" O.C. JOINTS STAGGERED 16" ON OPPOSITE SIDES. HORIZONTAL BRACING REQUIRED AT MID–HEIGHT. (LOAD– BEARING)

TEST #: NBC–W13b, stc: 57
double wood studs spaced 400 mm (16") or 600 mm (24") o.c., seperate plates set at 25mm (1") apart; single layer 12.7mm (½") type x gypsum board each side; two thickness, 89mm (3½") thick fiberglas pink batt insulation.

WALL BETWEEN DWELLING UNIT

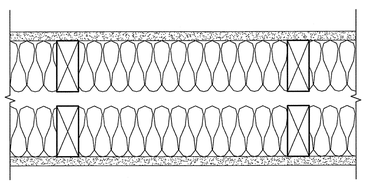

REVISIONS

PROPOSED 12-PLEX BUILDING FOR:

LEGACY VILLAS

COUNRTY VISTA ROAD, LIBERTY LAKE, WA

WYATT ARCHITECTS AND ASSOCIATES

JAMES A. McARTHUR, A.I.A.

Project Manager: Lee J. Schwarzenburg
East 8 South Grand Ave
Spokane, WA 99202
Phone 509-328-2850
lee@wyattarchitects.com

Jac South Grand Avenue
Spokane, WA 99202
Phone 509-327-7340 / Fax 509-327-7999
jamesmcarthur1@gmail.com

1934 REGISTERED ARCHITECT JAMES A. McARTHUR, JR. STATE OF WASHINGTON

6-20-2016

SHEET TITLE: BUILDING DETAILS

DRAWN BY: LJS

PROJECT: 15:26

DATE: 6/20/2016

SHEET NO. A2.8

182'-8"

4'-11" | 82'-0" | 8'-10"

11'-6 3/4" | 2'-0 1/4" | 15'-5" | 12'-0" | 12'-0" | 15'-5" | 2'-0 1/4" | 11'-6 3/4"

℄ OF POST | CENTERLINE OF POST | FACE OF POST AND WALL | FACE OF POST AND WALL | CENTERLINE OF POST

6'-0" | 5'-11" | 6'-0" | 3'-6" | 6'-0" | 6'-0" | 6'-0" | 6'-0" | 3'-6" | 6'-0" | 5'-11" | 6'-0"

5'-9"

13'-4"

1 A2.5 | 2 A2.5 | 3 A2.5 | 4 A2.5 | 5 A2.5 | 6 A2.5

BED'RM #1 10'-9"x 9'-10" | **UNIT 102 ROOM LIVING** 16'-6"x 15'-0" TYPE 'A' ACCESSIBLE UNIT | **MASTER** 11'-9"x 13'-4" | **MASTER** 11'-9"x 13'-4" | **UNIT 101 ROOM LIVING** 16'-6"x 15'-0" TYPE 'B' ACCESSIBLE UNIT | **BED'RM #1** 10'-9"x 9'-10"

7'-8" | 11 1/2" | 11 1/2" | 7'-8"

FACE OF POST AND FACE OF STUD

7'-5 1/2" | 2'-10 3/4" | 5'-9" | 3'-4" | 5'-2 1/4" | 5'-7 3/4" | 5'-9 1/2" | 5'-9 1/2" | 5'-7 3/4" | 5'-2 1/4" | 3'-4" | 5'-9" | 2'-10 3/4" | 7'-5 1/2"

4'-8 1/2" | 2'-9" | 6'-7" | 2'-8 1/2" | 5'-2" | 19'-2"

FLOOR LINE ABOVE

KIT. | DRY | WASH | KIT. | KIT.

4'-10" | 3'-2" | 5' CLEAR | 10'-7 1/2" | 2'-8 3/4" | 6'-7 1/4" | 2'-8 1/2"

WH | WH | WH | WH | WH | WH

2'-0" | 12'-10" | 2'-0" | 3'-0"

FACE OF POST | 4'-5" | 4'-0" | 2'-2" | 14'-1 1/2" | 14'-0" CLEAR | 24'-11"

8'-10 1/2" | 19'-0" | 10'-1 1/2" | 1'-0"

℄ OF POST | 3'-6"

RISER

PATH OF OPEN GARAGE DOOR | PATH OF OPEN GARAGE DOOR

20'-0"

42" BETWEEN STRINGERS TYP.

4'-8" | 3'-6" | 4'-8" | 6'-0"

4'-11"

17 | 19 | 19 | 19 | 19 | 19 | 19 | 19 | 19

FLOOR LINE ABOVE | FLOOR LINE ABOVE | FLOOR LINE ABOVE

3'-9" | 2'-3" | 6'-0" | 6'-0" | 5'-9" | 8'-9" | 5'-9" | 5'-9" | 6'-2" | 6'-2" | 5'-10" | 5'-10" | 5'-9" | 6'-2"

6'-0" | 12'-0" | 14'-6" | 11'-6" | 12'-4 1/2" | 11'-9" | 11'-11"

80'-0"

MATCH LINE

B A2.2

NOTE :

3068 GARAGE ENTRY DOORS TO BE 20 MINUTE WITH SELF-CLOSING DEVICE.

(SD) = CO/SMOKE DETECTOR

(W) – WHOLE HOUSE VENT 60 CFM

(E) – KITCHEN FAN 100 CFM

(F) – BATH FAN 60 CFM

A A2.7

LEGEND

1 HOUR WALL

NORTH | A A3.0 | 0 2' 4' 8' | SCALE: 1/4"=1'-0"

12-PLEX MAIN FLOOR PLAN BUILDING B-C

BUILDING D-E, G-F & J-K SIMILAR

Key Plan

REVISIONS

PROPOSED 12-PLEX BUILDING FOR:

LEGACY VILLAS

COUNRTY VISTA ROAD, LIBERTY LAKE, WA

WYATT ARCHITECTS AND ASSOCIATES

JAMES A. McARTHUR, A.I.A.

Project Manager:
Lee D. Schwartzenburg
Legacy Building Line
Spokane Valley, WA 99214
Phone 509-928-9600
lschwartz@wyattarchitects.com

Legacy Building Line
Spokane, WA 99203
Phone 509-327-7543 / Fax 509-327-7999
jallenmcarthur@gmail.com

1934 REGISTERED ARCHITECT
JAMES A. McARTHUR, JR.
STATE OF WASHINGTON
6-20-2016

SHEET TITLE:	12-PLEX MAIN FLOOR PLAN
DRAWN BY:	LJS
PROJECT:	15:26
DATE:	6/20/2016
SHEET NO.	A3.0

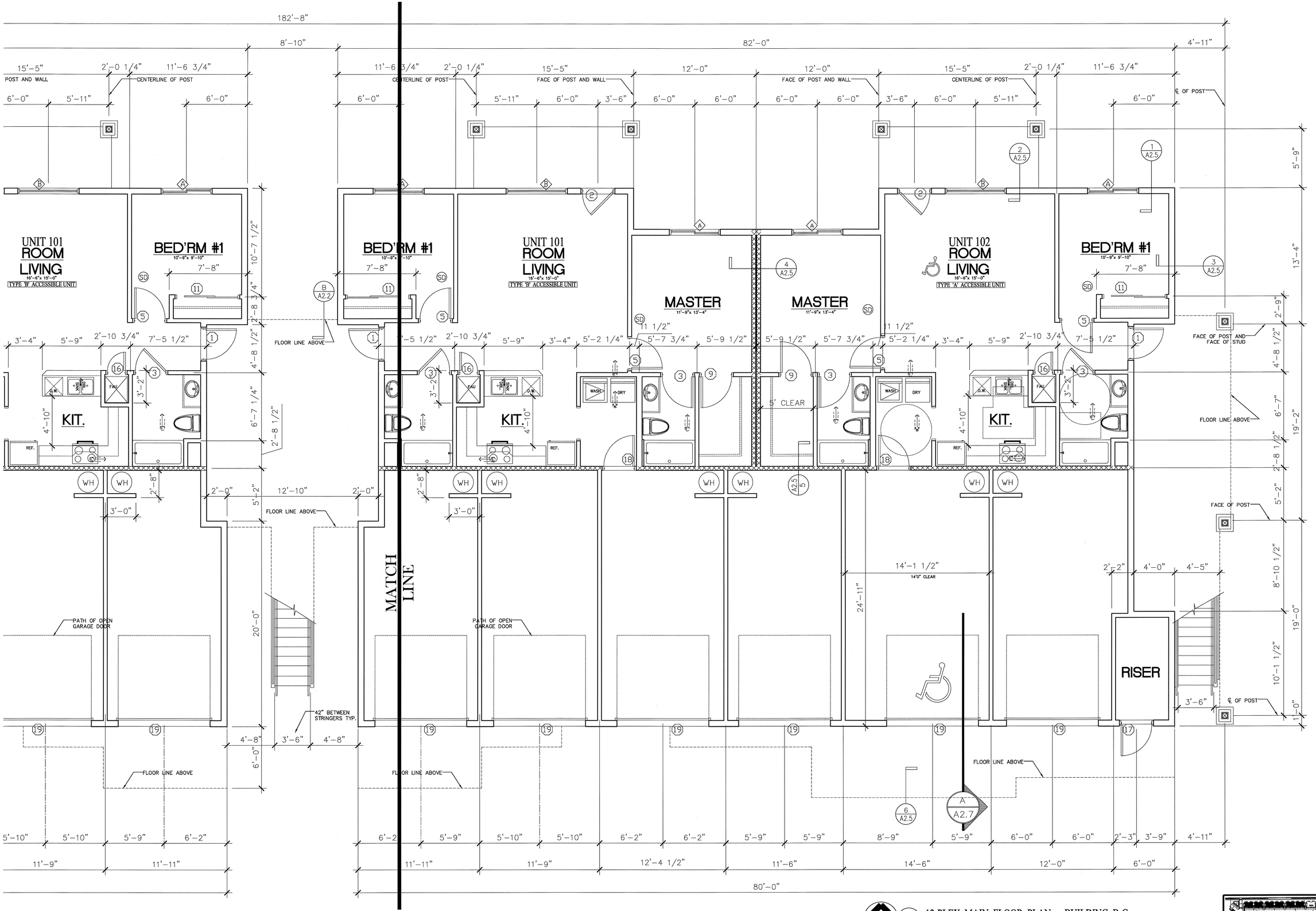

12-PLEX MAIN FLOOR PLAN BUILDING B-C

BUILDING D-E, G-F & J-K SIMILAR

NORTH A3.1

SCALE: 1/4"=1'-0"

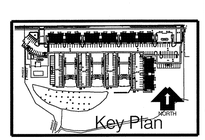

REVISIONS

PROPOSED 12-PLEX BUILDING FOR:

LEGACY VILLAS

COUNRTY VISTA ROAD, LIBERTY LAKE, WA

WYATT ARCHITECTS AND ASSOCIATES
JAMES A. MCARTHUR, A.I.A.
4208 South Cedarlin
Spokane Valley, WA 99206
Phone 509-327-7949 / Fax 509-327-7999
jaltarchitect@gmail.com

Project Manager:
Lee J. Schwartzenburg
P.O. Box 13
Spokane Valley, WA 99214
Phone 509-928-8501
leeschwyattarchitects.com

1934 REGISTERED ARCHITECT
JAMES A. MCARTHUR, JR.
STATE OF WASHINGTON
6-20-2016

SHEET TITLE:	12-PLEX MAIN FLOOR PLAN
DRAWN BY:	LJS
PROJECT:	15:26
DATE:	6/20/2016
SHEET NO.	A3.1

LEGEND

1 HOUR WALL

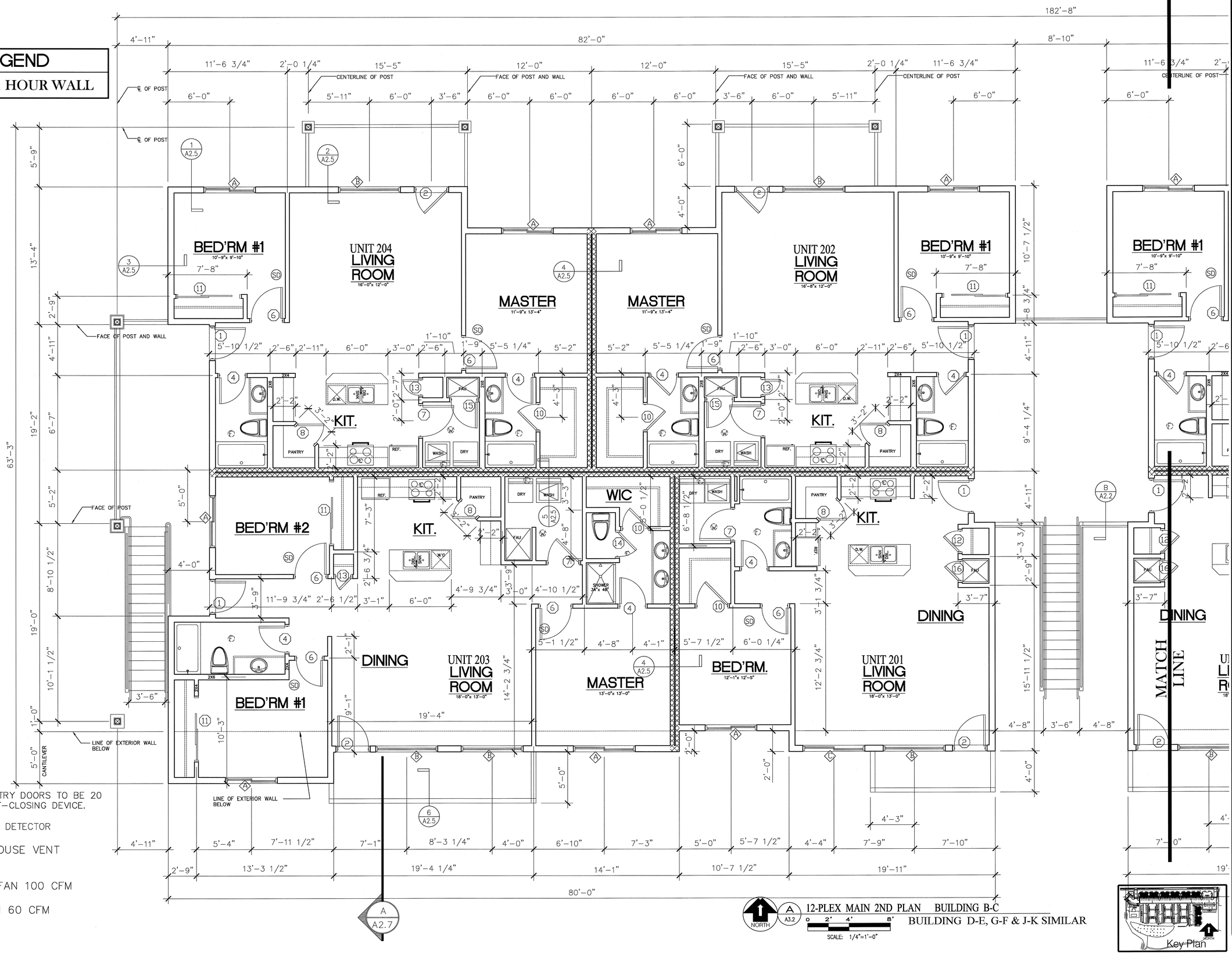

NOTE :

3068 GARAGE ENTRY DOORS TO BE 20 MINUTE WITH SELF-CLOSING DEVICE.

(SD) = CO/SMOKE DETECTOR

(W) – WHOLE HOUSE VENT 60 CFM

(E) – KITCHEN FAN 100 CFM

(F) – BATH FAN 60 CFM

NORTH

SCALE: 1/4"=1'-0"

12-PLEX MAIN 2ND PLAN BUILDING B-C

BUILDING D-E, G-F & J-K SIMILAR

Key Plan

REVISIONS

PROPOSED 12-PLEX BUILDING FOR:

LEGACY VILLAS

COUNRTY VISTA ROAD, LIBERTY LAKE, WA

WYATT ARCHITECTS AND ASSOCIATES

JAMES A. McARTHUR, A.I.A.

Project Manager:
Lee J. Schweitzenburg
Lic. No. 2006016
Spokane Valley, WA 99224
Phone 509-928-3660
leeschweitzenburg@wyattarchitects.com

1834 REGISTERED ARCHITECT
JAMES A. McARTHUR, JR.
STATE OF WASHINGTON
6-20-2016

SHEET TITLE:	12-PLEX 2nd FLOOR PLAN
DRAWN BY:	LJS
PROJECT:	15:26
DATE:	6/20/2016
SHEET NO.	A3.2

182'-8"

8'-10" | 82'-0" | 4'-11"

15'-5" | 2'-0 1/4" | 11'-6 3/4" | 11'-6 3/4" | 2'-0 1/4" | 15'-5" | 12'-0" | 12'-0" | 15'-5" | 2'-0 1/4" | 11'-6 3/4"

POST AND WALL — CENTERLINE OF POST — CENTERLINE OF POST — FACE OF POST AND WALL — FACE OF POST AND WALL — CENTERLINE OF POST

6'-0" | 5'-11" | 6'-0" | 6'-0" | 5'-11" | 6'-0" | 3'-6" | 6'-0" | 6'-0" | 6'-0" | 6'-0" | 3'-6" | 6'-0" | 5'-11" | 6'-0"

℄ OF POST

℄ OF POST

UNIT 202 LIVING ROOM 16'-8"x 12'-0"

BED'RM #1 10'-9"x 9'-10"

BED'RM #1 10'-9"x 9'-10"

UNIT 202 LIVING ROOM 16'-8"x 12'-0"

MASTER 11'-9"x 13'-4"

MASTER 11'-9"x 13'-4"

UNIT 204 LIVING ROOM 16'-0"x 12'-0"

BED'RM #1 10'-9"x 9'-10"

FACE OF POST AND WALL

KIT.

KIT.

KIT.

KIT.

WIC

KIT.

BED'RM #2

DINING

DINING

UNIT 201 LIVING ROOM 18'-0"x 13'-0"

MATCH LINE

UNIT 201 LIVING ROOM 18'-0"x 13'-0"

BED'RM. 12'-1"x 12'-5"

MASTER 13'-0"x 13'-0"

UNIT 203 LIVING ROOM 18'-0"x 13'-0"

DINING

BED'RM #1

FACE OF POST

LINE OF EXTERIOR WALL BELOW

LINE OF EXTERIOR WALL BELOW

CANTILEVER

19'-11" | 19'-11" | 10'-7 1/2" | 14'-1" | 19'-4 1/4" | 13'-3 1/2" | 2'-9"

80'-0"

12-PLEX 2ND FLOOR PLAN BUILDING B-C

BUILDING D-E, G-F & J-K SIMILAR

SCALE: 1/4"=1'-0"

Key Plan

REVISIONS

PROPOSED 12-PLEX BUILDING FOR:

LEGACY VILLAS

COUNRTY VISTA ROAD, LIBERTY LAKE, WA

WYATT ARCHITECTS AND ASSOCIATES

JAMES A. McARTHUR, A.I.A.

4206 South Crestline
Spokane, WA 99203
Phone 509-327-7565 / Fax 509-327-7599
jlatterwyatt@hotmail.com

Project Manager:
Lee D. Schwartzenburg
15405 E. Mission
Spokane Valley, WA 99214
Phone 509-768-9801
leeschwartzarchitects.com

1934 REGISTERED ARCHITECT
JAMES A. McARTHUR, JR.
STATE OF WASHINGTON
6-20-2016

SHEET TITLE:	12-PLEX 2nd FLOOR PLAN
DRAWN BY:	LJS
PROJECT:	15:26
DATE:	6/20/2016
SHEET NO.	A3.3

\WCE_WORK\2016 WCE PROJECTS\2016-1624 Wyatt Arch - Copper Basin Liberty Lake Apt\DWG\STRUCTURAL\DRAWINGS\DBL 6 PLEX\2016-1624 S1.X General Notes and Typical Details.dwg, 6/20/2016 8:47:36 AM, jaredk, DWG To PDF.pc3

GENERAL REQUIREMENTS

Structural drawings shall be used in conjunction with Architectural, Mechanical, Plumbing, and Electrical drawings for bidding and construction purposes. Contractor shall verify all dimensions and conditions for compatibility before proceeding. Any discrepancies shall be brought to the attention of the Architect and the Engineer of Record.

The structural notes are intended to compliment the project specifications. Specific notes and details in the drawings shall govern over the general structural notes and typical details.

All work shall be done in accordance with OSHA requirements. Potential conflicts between these documents and OSHA requirements shall be brought to the attention of the structural engineer prior to proceeding with the work.

Contractor to refer to Architectural, Civil, Mechanical, Plumbing and Electrical drawings for locations and sizes of pipes, vents, ducts and other openings not shown on this plan. Sizes and locations of mechanical and other equipment that differs from those shown on the contract drawings shall be reported to the architect/engineer.

Contractor to refer to Architectural and Civil Engineering drawing to coordinate finished grade elevations, finished floor elevations and any slab depressions, slopes or other finishing requirements.

Contractor shall be responsible for erection stability and temporary shoring as required until the completion of the structure. The Structural Engineer is responsible for the strength and stability of the primary structure in its completed form.

Contractor initiated changes shall be in writing to the Architect/Engineer of Record for approval prior to fabrication and/or construction.

Drawings indicate general and typical details of construction and may not reflect all details of the work. Where conditions are not specifically indicated but are of a similar character to details shown, similar details of construction shall be used, subject to the review and approval of the architect and structural engineer.

BASIS OF DESIGN

GOVERNING CODE: International Building Code, 2012 Edition

WIND DESIGN: Basic Wind Speed 110 MPH, Exposure C, Building Category II (Iw = 1.0)

SEISMIC DESIGN:
Seismic Importance Factor, Ie = 1.0
Seismic Use Group = II
Site Class = C
Spectral Response Coefficient (Short Period) SDS = 0.274 g
Spectral Response Coefficient (1-Second Period) SD1 = 0.129g
Seismic Design Category B
Response Modification Factor: R = 6.5 (Light framed wood shear walls)
Seismic response coefficients(s), Cs = 0.0422 (Allowable Stress Design)

DESIGN LIVE LOADS:

Roof (Snow)	40 PSF
Roof (Construction Live)	20 PSF (Not concurrent with Snow)
Floor (Residential)	40 PSF
Floor (Corridor/Stairway)	100 PSF

DESIGN DEAD LOADS:

Roof	15 PSF
Floor (Residential)	25 PSF (Includes 1" Gpycrete topping)
Floor (Corridor/Stairway)	50 PSF (Includes 3" Concrete topping)

FOUNDATIONS:

DESIGN SOIL VALUES:	3000 PSF
FROST PROTECTION:	24 Inch Minimum

GEOTECHNICAL REPORT:
Recommendations contained in "Geotechnical Evaluation, Proposed Apartments Parcel NO. 55156.9189 Liberty Lake, WA" by Inland Pacific Engineering Company, Project #15-189 Dated October 29, 2015 was used for this design. Contractor shall review the Geotechnical Report and shall follow the recommendations specified therein regarding subgrade preparation and water mitigation.

GEOTECHNICAL INSPECTION:
The Geotechnical Engineer shall inspect all prepared soil bearing surfaces prior to placement of concrete and reinforcing steel and provide a letter to the owner stating the soils are adequate to support the design soil values. Contractor to follow the geotechnical engineer's recommendations for Steep Slope Best Management Practices where applicable.

CAST-IN-PLACE CONCRETE

All concrete shall be stone aggregate concrete having a unit weight of approximately 150 pcf. Concrete submittals shall conform to IBC Section 1905. Contractor shall submit concrete mix design and testing reports for review by the engineer prior to placement of any concrete. Mixing and Placing of all concrete shall be in accordance with ACI 301, ACI 318 and the IBC.

MIX DESIGN REQUIREMENTS

	Specified 28-Day Compressive Strength	Maximum Aggregate Size	Max. W/C Ratio	Air Content (%)
Foundations	3000 psi**	1 Inch	--	--
Foundation Stem Walls	3000 psi**	3/4 Inch	--	5.0
Interior SOG	2500 psi	3/4 Inch	0.60	--
Exterior SOG	3000 psi**	3/4 Inch	0.50	6.0

** Concrete Designed for 2500 psi. No Special Inspection Required.

W/C Ratio: Water-cementitious material ratios shall be based on the total weight of cementitious materials. Ratios not shown in the table above are controlled by strength requirements.

Cementitious Content: The use of fly ash, other pozzolans, silica fume, or slag shall conform to ACI standards. The amount of fly ash shall be a maximum of 20% of the total cementitious content unless reviewed and approved otherwise.

Air Content: Conform to ACI Standards. Horizontal exterior surfaces in contact with the soil require entrained air in accordance to ACI Table 4.2.2.4 for Severe Exposure. Tolerance is ±1.5%. Air content shall be measured at point of placement.

Slump: Conform to ACI Standards. Slump shall be determined at point of placement, a maximum of 4" unless approved otherwise.

CONCRETE REINFORCEMENT

All reinforcement shall conform to ASTM A-615 Grade 60 and made from new billets. Reinforcement to be welded shall conform to ASTM A-706 Grade 60 and be used only on the approval of the engineer of record. Welded Wire Fabric (WWF) shall be in accordance to ASTM A-185. Wire Mesh shall lap at least one grid at ends and edges.

Detail reinforcing steel in accordance with the most current edition of "ACI Manual of Standard Practice of Detailing Reinforced Concrete Structures."

Lap continuous reinforcement as indicated in the structural details for this project. Mechanical splices may be used when approved by the engineer of record.

Anchor bolts, dowels and other embedded items to be securely tied in place prior on the placement of concrete.

The following minimum cover shall be provided for reinforcement unless noted otherwise on drawings:

Concrete cast against and permanently exposed to earth	
All Reinforcement	3" Earth Face
Concrete exposed to earth or weather (cast in formwork)	
#3, #4 and #5 Bars	1-1/2"
#6 - #18 Bars	2"
Concrete not exposed to weather or in contact with ground	
Slabs, Walls and Joists #11 or smaller	3/4"
Beams and Columns	1-1/2"

Field Bending shall conform to ACI 301 "Field Bending or Straightening". Bar sizes #3 to #5 may be field bent cold once. Other sizes will require review of the method through the engineer of record. Do not twist bars.

STRUCTURAL STEEL

Design, fabrication and erection of structural steel shall conform to the specifications and standards of the American Institute of Steel Construction (AISC), as contained in the latest edition of "AISC Manual of Steel Construction".

All structural steel shall be erected plumb and true to line. Temporary bracing shall be installed and shall be left in place until other means are provided to adequately brace the structure.

STRUCTURAL STEEL GRADES

Wide Flange and WT Sections	ASTM A992, 50 ksi
Square or Rectangular HSS	ASTM A500, Grade B, 46 ksi
Plates, Angles, Channels	ASTM A36
High Strength Bolts	ASTM A325
Nuts	ASTM A536
Washers (Flat/Beveled)	ASTM F436
Anchor Bolts/Rods	ASTM F1554, Grade 36
Mild Threaded Rods	ASTM A36

Except as otherwise noted, all bolts shall be high strength bolts.

All connections not shown shall conform to the AISC Manual of Steel Construction and shall be submitted on shop drawings for review by the engineer of record prior to fabrication.

All fabrication shall be performed by a licensed fabricator. The fabricator shall maintain detailed fabrication and erection quality control procedures per IBC Section 1704.2 that provides a basis for inspection control and workmanship and insures the work is performed in accordance with Code of Standard Practice, the AISC Specification, and the Contact Documents. Fabricators certified by the AISC Quality Certification Program with an Sbd level of certification are deemed to comply with this provision.

WELDING

Welding shall conform to AWS D1.1 "Code for Welding in Building Construction" and the AISC "Specifications for the Design, Fabrication and Erection of Structural Steel Buildings".

All welders shall have evidence of passing the AWS Standard Qualification Tests and be certified for the work they are performing.

Welding of Structural Steel shall be performed per AWS D1.1 using E70XX electrodes unless noted otherwise.

Field welds have been indicated where they are expected to occur. The contractor shall determine the actual field welding necessary to complete the project.

WOOD

Materials:

Dimensional Lumber and Timbers (Solid Sawn):
- Visually graded lumber shall be Douglas Fir-Larch #2 or better.
- Visually graded timbers shall be Douglas Fir-Larch #1 or better.
- Finger-jointed studs are acceptable only at interior walls.
- The moisture content of all lumber shall be 19% or less at the time of construction.

Structural Glued Laminated Timbers (GLB):
- Structural Glulam timbers shall be manufactured and graded as required in ASTM D3737 and ANSI A190.1 and be stamped with an AITC quality mark or APA-EWS trademark.
- Glulam beams shall be Douglas Fir Combination 24F-V4 1.8E for simple span beams and 24F-V8 1.8E for continuous spans and cantilevers. Other glulam combinations with equivalent design properties may be used with written approval from the engineer of record.
- Stair stringers shall be Alaskan Cedar Combination 20F-V12 1.5E.
- Glulam columns shall be Douglas Fir Combination 2 1.8E.
- Glulam members shall be Framing or Industrial appearance.
- Camber: All stock glulam beams shall be cambered with a 3500' radius unless noted otherwise on plan. Stock beams with zero camber are acceptable where available.

Wood Structural Panel Sheathing:
- Wood structural panels shall conform to the requirements for its type in US Dept. of Commerce PS1 or PS2. The panels must be identified by the trademarks of the approving testing and inspection agency.
- Wood sheathing includes all veneer plywood and oriented strand board and shall be APA rated Exposure 1, unless noted otherwise.
- Wood sheathing shall have the following minimum thicknesses and span ratings, unless noted otherwise:

Wall	15/32" (32/16)	Plywood
Wall	7/16" (24/16)	Oriented Strand Board
Roof	7/16" (32/16)	Oriented Strand Board
Roof	19/32" (40/20)	
Floor	23/32" (48/24)	Tongue and Groove

- Install roof and floor panels with long dimension across two or more supports, unless noted otherwise. End joints shall occur at supports.
- Nails or other approved fasteners attaching sheathing to structure shall be driven with the head or crown flush with the surface of the sheathing. Do not overdrive fasteners.

Nails:
- All nails shall conform to the tolerances specified in ASTM F1667.
- All nails shall be common nails with the following specifications. Alternate nails may be used upon approval of the engineer of record:
-

Nail	Shank Diameter	Min. Penetration
6d	0.113"	1-1/4"
8d	0.131"	1-1/2"
10d	0.148"	1-5/8"
12d	0.148"	1-5/8"
16d	0.162"	1-3/4"

- Refer to the "Fastening Schedule" included with this plan set for general framing and carpentry connections.
- All connections in contact with pressure treated or fire treated wood shall be hot-dipped galvanized or stainless steel.

Bolts/Lag Screws:
- Anchor Bolts shall be Grade 36 conforming to ASTM F1554. All anchor bolts shall have a washer between the sill plate and nut.
- Connection Bolts shall be ASTM A307 Grade A/C
- Bolt holes shall be oversized no greater than 1/16" larger than the specified bolt diameter. Holes between main and side members shall be accurately aligned such the bolt is not forcibly driven.
- Provide a minimum standard cut washer or metal plate between the wood and bolt head and wood and nut.
- All connections in contact with pressure treated or fire treated wood shall be hot-dipped galvanized or stainless steel.

Connection Hardware:
- All connection hardware shall be supplied by Simpson Strong-Tie, Inc. Install hardware per the manufacturer's guidelines. Connection hardware of equal design properties by other manufacturers may be used with written approval from the engineer of record. All connections in contact with pressure treated or fire treated wood shall be hot-dipped galvanized or stainless steel.

Pre-Fabricated Wood Trusses:
- Pre-Fabricated metal plate wood trusses shall be designed by a Professional Engineer registered in the same state as the project location. Design, handling, erection and permanent bracing shall be in accordance to ANSI/TPI-1. All steel gusset plate connectors shall be galvanized and ICBO certified.
- Roof Truss Design Criteria

Top Chord Dead Load:	7.0 psf
Bottom Chord Dead Load:	8.0 psf
Top Chord Live Load (Snow):	**See Design Live Loads
Top Chord Live Load (Const):	20.0 psf (Non-concurrent with Snow)

** Loads caused by drifting, unbalanced or sliding snow are not accounted for in the uniform loads above.

- Designs shall include a top chord over-framing load of 8.0 psf at all overbuild locations. The structural, architectural and mechanical plans may show additional loading information. Loads shown on these other sheets shall be incorporate into the design and engineering of the trusses. Additional trusses may be required.
- The truss manufacturer shall verify all truss dimensions.
- The truss manufacturer shall design and supply all truss-to-truss connections.
- Truss deflection shall be limited to L/240 for total load and L/360 for live load.
- Shop Drawings: Complete calculations and shop drawings indicating all member forces, stresses, reactions, lumber grades, dimensions, truss-to-truss connections, pressed steel plates, shall be submitted to the engineer of record and local building official for review and approval prior to fabrication.
- The requirements for truss stability and erection shall comply with the Truss Plate Institute entitled "Commentary and Recommendations for Handling and Erecting Wood Trusses." The contractor shall have copies of these publications on site and be familiar with their contents. The contractor is responsible for temporary bracing and support of trusses during construction.

ABBREVIATIONS

∠	ANGLE
AB	ANCHOR BOLT
ADDL	ADDITIONAL
ALT	ALTERNATE
ARCH	ARCHITECTURAL
B	BOTTOM
B/	BOTTOM OF
BLDG	BUILDING
BLKG	BLOCKING
BP	BASE PLATE
BRG	BEARING
BTWN	BETWEEN
℄	CENTERLINE
C	CAMBER
CIP	CAST IN PLACE
CJ	CONSTRUCTION OR CONTROL JOINT
CJP	COMPLETE JOINT PENETRATION
CLR	CLEAR
CMU	CONCRETE MASONRY UNIT
COL	COLUMN
CONC	CONCRETE
CONN	CONNECTION
CONST	CONSTRUCTION
CONT	CONTINUOUS
CSINK	COUNTERSINK
CTRD	CENTERED
ø	DIAMETER
DB	DROP BEAM
DBA	DEFORMED BAR ANCHOR
DBL	DOUBLE
DF	DOUG-FIR LARCH
DIAG	DIAGONAL
DIST	DISTRIBUTED
DL	DEAD LOAD
DN	DOWN
DP	DEEP/DEPTH
DWG	DRAWING
(E)	EXISTING
EA	EACH
EF	EACH FACE
ELEV	ELEVATION
ELEC	ELECTRICAL
EMBED	EMBEDMENT
EQ	EQUAL
EQUIP	EQUIPMENT
EW	EACH WAY
EXP	EXPANSION
EXT	EXTERIOR
FD	FLOOR DRAIN
FDN	FOUNDATION
FIN	FINISH
FLR	FLOOR
FTG	FOOTING
F/	FACE OF
GA	GAGE
GALV	GALVANIZED
GL	GLUE LAMINATED BEAM
GWB	GYPSUM WALL BOARD
HDR	HEADER
HF	HEM-FIR
HGR	HANGER
HD	HOLD-DOWN
HORIZ	HORIZONTAL
HSS	HOLLOW STRUCTURAL SECTION
IBC	INTERNATIONAL BUILDING CODE
ID	INSIDE DIAMETER
IE	INVERT ELEVATION
IF	INSIDE FACE
INT	INTERIOR
k	KIPS
KSF	KIPS PER SQUARE FOOT
LF	LINEAL FEET
LL	LIVE LOAD
LLH	LONG LEG HORIZONTAL
LLV	LONG LEG VERTICAL
LP	LOW POINT
LONGIT	LONGITUDINAL
LSL	LAMINATED STRAND LUMBER
LVL	LAMINATED VENEER LUMBER
MAS	MASONRY
MAX	MAXIMUM
MECH	MECHANICAL
MEZZ	MEZZANINE
MFR	MANUFACTURER
MIN	MINIMUM
MISC	MISCELLANEOUS
NIC	NOT IN CONTRACT
NTS	NOT TO SCALE
OC	ON CENTER
OD	OUTSIDE DIAMETER
OF	OUTSIDE FACE
OPNG	OPENING
OPP	OPPOSITE
OSB	ORIENTATED STRAND BOARD
OWSJ	OPEN WEB STEEL JOIST
OWWJ	OPEN WEB WOOD JOIST
PL	PLATE
PAF	POWDER ACTUATED FASTENER
PC	PRECAST
PERP	PERPENDICULAR
PLWD	PLYWOOD
PP	PARTIAL PENETRATION
PREFAB	PREFABRICATED
PSF	POUNDS PER SQUARE FOOT
PSI	POUNDS PER SQUARE INCH
PSL	PARALLEL STRAND LUMBER
P-T	POST-TENSIONED
PT	PRESSURE TREATED
R	RADIUS
RD	ROOF DRAIN
REF	REFERENCE
REINF	REINFORCING
REQD	REQUIRED
SCHED	SCHEDULE
SHTHG	SHEATHING
SIM	SIMILAR
SOG	SLAB ON GRADE
SPEC	SPECIFICATION
SQ	SQUARE
SR	STUDRAIL
STAGG	STAGGERED
STD	STANDARD
STIFF	STIFFENER
STL	STEEL
SWWJ	SOLID WEB WOOD JOIST (I-JOIST)
SYM	SYMMETRICAL
T	TOP
T/	TOP OF
T&B	TOP AND BOTTOM
TC AX LD	TOP CHORD AXIAL LOAD
TCX	TOP CHORD EXTENSION
TDS	TIE DOWN SYSTEM
T&G	TONGUE AND GROOVE
THKND	THICKENED
THRD	THREADED
THRU	THROUGH
TRANSV	TRANSVERSE
TYP	TYPICAL
UNO	UNLESS NOTED OTHERWISE
VERT	VERTICAL
W	WIDE
w/	WITH
w/o	WITHOUT
WHS	WELDED HEADED STUD
WP	WORKING POINT
WWF	WELDED WIRE FABRIC
±	PLUS OR MINUS

SYMBOL LEGEND

MARK	DESCRIPTION	MARK	DESCRIPTION
F2.0	FOOTING CALLOUT (SEE SPREAD FOOTING SCHEDULE)		INDICATES WIDE FLANGE COLUMN
P6	SHEAR WALL CALLOUT (SEE TO SHEAR WALL SCHEDULE)		INDICATES HSS OR TS COLUMN
	REVISION TRIANGLE		DENOTES WOOD POST OR BUNDLED STUDS
	COLUMN IDENTIFICATION		DENOTES CONCRETE OR PRECAST COLUMN
T/?=0'-0" (NOTE)	ELEVATION AT POINT OF INDICATION (IE: T/SLAB, T/FTG, T/...)		DENOTES WOOD OR STEEL STUD WALL
	INDICATES STEP		DENOTES MASONRY OR CMU WALL
#/SX.X	DETAILS OR SECTION CUT		DENOTES PRECAST OR TILT-UP CONCRETE WALL
	DETAILS OR SECTION CUT IN PLAN VIEW		DENOTES WOOD STUD SHEAR WALL
? S?.?	ELEVATION CALLOUT		DENOTES BEARING WALL BELOW
	SPAN INDICATOR		DENOTES NON-BEARING WALL BELOW
	DENOTES DIRECTION OF DECK OR SHEATHING SPAN		DENOTES EXISTING WALL

REVISIONS

REV	DATE	BY

WCE
WHIPPLE CONSULTING ENGINEERS
2528 NORTH SULLIVAN ROAD
SPOKANE VALLEY, WA 99216
PH: 509-893-2617 FAX: 509-926-0227

CIVIL
X STRUCTURAL
SURVEYING
TRAFFIC
PLANNING
LANDSCAPE
OTHER

LEGACY VILLAS
12-PLEX
LIBERTY LAKE, WA

DRAWN:	JDK
REVIEWED:	CAP
SCALE:	PER PLAN
PROJ #:	16-1624
DATE:	06/20/16

STRUCTURAL GENERAL NOTES

S1.1

STATEMENT OF SPECIAL INSPECTIONS

1. OWNER SHALL EMPLOY ONE OR MORE SPECIAL INSPECTORS TO PROVIDE INSPECTIONS DURING CONSTRUCTION. THE SPECIAL INSPECTOR SHALL DEMONSTRATE COMPETENCE, TO THE SATISFACTION OF THE BUILDING OFFICIAL, FOR INSPECTION OF THE PARTICULAR TYPE OF CONSTRUCTION OR OPERATION REQUIRING SPECIAL INSPECTION.
2. ALL INSPECTIONS SHALL BE PERFORMED BY INDEPENDENT SPECIAL INSPECTORS. JOB SITE VISITS BY THE STRUCTURAL ENGINEER OF RECORD OR BUILDING OFFICIAL DO NOT CONSTITUTE AND ARE NOT A SUBSTITUTE FOR INSPECTIONS BY A SPECIAL INSPECTOR.
3. ALL INSPECTION REPORTS SHALL BE SUBMITTED TO THE BUILDING OFFICIAL AND STRUCTURAL ENGINEER OF RECORD. THE FINAL REPORTS BY THE SPECIAL INSPECTOR(S) MUST CERTIFY THE ENTIRE STRUCTURAL SYSTEM COMPLIES WITH THE APPROVED PLANS AND SPECIFICATIONS.
4. IT IS SOLELY THE CONTRACTOR'S RESPONSIBILITY TO SEE THESE INSPECTIONS ARE PERFORMED.
5. WORK REQUIRING SPECIAL INSPECTION SHALL BE INSPECTED BY THE SPECIAL INSPECTOR WHO IS PRESENT IN THE AREA WHERE THE WORK IS BEING PERFORMED AND AT THE COMPLETION OF WORK. CONTINUOUS INSPECTION CONSISTS OF FULL-TIME INSPECTION; PERIODIC INSPECTION CONSISTS OF PART-TIME OR INTERMITTENT INSPECTION.
6. THE FOLLOWING SPECIAL INSPECTIONS ARE IN ADDITION TO INSPECTION BY THE BUILDING OFFICIAL. THIS LIST NOT INTENDED TO BE ALL-INCLUSIVE.

STRUCTURAL OBSERVATIONS

VISUAL STRUCTURAL OBSERVATIONS WILL BE PERFORMED AT THE DISCRETION OF THE OWNER, ARCHITECT, STRUCTURAL ENGINEER OF RECORD, AND AS REQUIRED BY THE BUILDING OFFICIAL IN ACCORDANCE WITH THE BUILDING CODE. VISUAL OBSERVATIONS SHALL NOT BE CONSIDERED AS A SUBSTITUTE FOR SPECIAL INSPECTION REQUIREMENTS.

1. IF STRUCTURAL OBSERVATIONS ARE TO BE PROVIDED, IT IS THE RESPONSIBILITY OF THE GENERAL CONTRACTOR TO NOTIFY THE STRUCTURAL ENGINEER OF RECORD AS TO WHEN EACH MAJOR PHASE OF CONSTRUCTION, AS NOTED BELOW, IS READY FOR OBSERVATION A MINIMUM OF (3) WORKING DAYS IN ADVANCE.

- FOUNDATION REBAR AND ANCHORS – PRIOR TO POURING CONCRETE
- STRUCTURAL FRAMING – AFTER ERECTION AND PRIOR TO CLOSING IN
- RAISED FLOOR SLABS AND REBAR – PRIOR TO POURING CONCRETE
- ROOF NAILING – PRIOR TO INSTALLING ROOFING AND CRICKETS
- COMPLETION OF THE STRUCTURAL SYSTEM

2. THE CONTRACTOR SHALL BE RESPONSIBLE FOR ENSURING THAT NAILING, REINFORCEMENT, WELDS, CONNECTIONS, ETC. ARE VISIBLE FOR OBSERVATION WHEN THE STRUCTURAL ENGINEER OF RECORD IS ON SITE AND FOR ANY SCHEDULING DELAYS DUE TO NONCOMPLIANT ITEMS FOUND DURING THE OBSERVATION.

3. AT THE CONCLUSION OF THE WORK INCLUDED IN THE PERMIT, THE STRUCTURAL OBSERVER SHALL SUBMIT TO THE BUILDING OFFICIAL A WRITTEN STATEMENT ABOUT ANY SITE VISITS THAT HAVE BEEN MADE AND IDENTIFY ANY REPORTED DEFICIENCIES THAT, TO THE BEST OF THE STRUCTURAL OBSERVER'S KNOWLEDGE, HAVE NOT BEEN RESOLVED.

SCHEDULE OF SPECIAL INSPECTION

SPECIAL INSPECTION TYPE	CONT, PERIODIC, SUBMITTAL, NONE	NOTES/REMARKS
FABRICATION AND IMPLEMENTAION PROCEDURES – STRUCTURAL STEEL (IBC 1704.2.5.1)		
Fabrication Procedures: Review of fabricator's written procedural and quality control manuals and periodic auditing of fabrication practices by an approved special inspection agency. --OR-- AISC Certification	N/A	
At the completion of fabrication, the approved fabricator shall submit a certificate of compliance to the building code official stating the work was performed in accordance with the approved construction documents.	N/A	
FABRICATION AND IMPLEMENTAION PROCEDURES – WOOD TRUSSES (IBC 1704.2.5.1)		
Fabrication Procedures: Review of fabricator's written procedural and quality control manuals and periodic auditing of fabrication practices by an approved special inspection agency. --OR-- TPI Inspection Program: Fabricator shall participate in the TPI Quality Assurance Inspection Program, and maintain a copy of the Quality Assurance Procedures Manual, QAP-90. Submit copy of certificate. All trusses shall bear the TPI Registered Mark.	SUBMITTAL	
At the completion of fabrication, the approved fabricator shall submit a certificate of compliance to the building code official stating the work was performed in accordance with the approved construction documents.	SUBMITTAL	
SOILS (IBC 1705.6)		
Excavation	PERIODIC	Verify excavations are extended to proper depth and have reached proper material.
Subgrade	PERIODIC	Prior to placement of compacted fill, observe subgrade to verify site has been properly prepared.
Soil Bearing Capacity	PERIODIC	Verify materials below shallow foundations are adequate to achieve the design bearing capacity.
Fill	PERIODIC	Verify use of proper materials, densities, and lift thicknesses during placement and compaction of fill.
CONCRETE (IBC 1705.3)		Special inspection not required for Concrete work on this project per exemptions of IBC 1705.3
Reinforcing Placement	**	Verify prior to placing concrete that reinforcing is of specified type, grade and size; that it is free of oil, dirt, rust; that it is located and spaced properly; that hooks, bends, ties, stirrups, and supplemental reinforcing are placed correctly; that lap lengths, stagger and offsets are provided; and that all mechanical connections are installed per the manufacturer's instructions and/or evaluation report.
Anchor Bolts	**	Verify size, spacing and embedment meets the requirements of this construction document.
Hold-Down Anchor Bolt Placement	**	Verify specified cast-in-place anchor, location and embedment meets the requirements of this construction document.
Formwork	**	Verify that forms are placed plumb and conform to the shapes, lines, and dimensions of the members as required by the approved construction documents.
Use of Required Mix Design	**	Verify that all mixes used comply with the approved construction documents; ACI 318: Ch 4, 5.2-5.4 and IBC 1904.2, 1910.2 & 1910.3
Concrete Sampling for Strength Tests, Slump, Air Content and Temperature	**	Submit reports as defined in Concrete Section of the Structural General Notes
Concrete Placement	**	
Inspection and Maintenance of specified curing techniques and temperatures.	**	
Adhesive Anchors	CONT	All post-installed adhesive anchors/dowels shall be specially inspected as required by the approved ICC-ES Report.
Titen HD	PERIODIC	Simpson Titen HD Anchors shall be specially inspected as required by the approved ICC-ES Report.
STRUCTURAL STEEL (IBC 1704.3.3)		
High Strength Bolting	N/A	Verify that all joints use proper fastener components, connected elements are fabricated properly, the bolted joint is drawn into firm contact and that nuts cannot be removed without use of a wrench.
FIELD WELDING (IBC 1705.2.2.1)		
Single Pass Fillet Welds 5/16" or Less	N/A	Pre-welding inspections are to be performed to ensure that proper materials (i.e. structural steel, weld filler material, etc.), welding procedures, and welding personnel qualifications are appropriate. A visual inspection of all welds must be provided with periodic inspections made of work in progress.
Embedded Plates		
WOOD FRAME (IBC 1705.5, 1705.10.1 & 1705.11.2)		
Shear Wall and Diaphragm Nailing	PERIODIC	If fastener spacing is < 4" on center: Verify proper nailing, bolting, anchoring and other fastening of shear walls and diaphragms has occurred.
Shear Wall and Diaphragm Connectors and Hold-Downs/Straps	PERIODIC	Verify proper nailing, bolting, anchoring and other fastening of hold-downs, floor-to-floor straps, drag connection and all other shear wall and diaphragm connector has occurred as required by the approved ICC-ES Report.
Wood Trusses > 60-feet	CONT	Verify that temporary and permanent truss bracing is installed in accordance with approved truss package.

CRAIG A. PENFIELD STATE OF WASHINGTON 42811 REGISTERED PROFESSIONAL ENGINEER

REVISIONS

REV	DATE	BY

WCE
WHIPPLE CONSULTING ENGINEERS
2528 NORTH SULLIVAN ROAD
SPOKANE VALLEY, WA 99216
PH: 509-893-2617 FAX: 509-926-0227

CIVIL | X STRUCTURAL | SURVEYING | TRAFFIC | PLANNING | LANDSCAPE | OTHER

LEGACY VILLAS
12-PLEX

LIBERTY LAKE, WA

DRAWN:	JDK
REVIEWED:	CAP
SCALE:	PER PLAN
PROJ #:	16-1624
DATE:	06/20/16

STRUCTURAL GENERAL NOTES

S1.2

I:\WCE_WORK\2016 WCE PROJECTS\2016-1624 Wyatt Arch - Copper Basin Liberty Lake 4plex\DWG\STRUCTURAL\DRAWINGS\S1.2 GENERAL NOTES AND TYPICAL DETAILS.dwg, 6/20/2016 8:47:41 AM, jamelk, DWG To PDF.pc3

TABLE 2304.9.1
FASTENING SCHEDULE

CONNECTION	FASTENING[a,m]	LOCATION
1. Joist to sill or girder	3–8d common (2½" x 0.131") 3–3" x 0.131" nails 3–3" x 14 gage staples	toenail
2. Bridging to joist	2–8d common (2½" x 0.131") 2–3" x 0.131" nails 2–3" x 14 gage staples	toenail each end
3. 1" x 6" subfloor to each joist	2–8d common (2½" x 0.131")	face nail
4. Wider than 1" x 6" subfloor to each joist	3–8d common (2½" x 0.131")	face nail
5. 2" subfloor to joist or girder	2–16d common (3½" x 0.162")	blind and face nail
6. Sole plate to joist or blocking	16d (3½" x 0.135") at 16" o.c. 3" x 0.131" nails at 8" o.c. 3" 14 gage staples at 12" o.c.	typical face nail
Sole plate to joist or blocking at braced wall panel	3–16d (3½" x 0.135") at 16" o.c. 4–3" x 0.131" nails at 16" o.c. 4–3" 14 gage staples at 16" o.c.	braced wall panels
7. Top plate to stud	2–16d common (3½" x 0.162") 3–3" x 0.131" nails 3–3" 14 gage staples	end nail
8. Stud to sole plate	4–8d common (2½" x 0.131") 4–3" x 0.131" nails 3–3" 14 gage staples	toenail
	2–16d common (3½" x 0.162") 3–3" x 0.131" nails 3–3" 14 gage staples	end nail
9. Double studs	16d (3½" x 0.135") at 24" o.c. 3" x 0.131" nails at 8" o.c. 3" 14 gage staples at 8" o.c.	face nail
10. Double top plates	16d (3½" x 0.135") at 16" o.c. 3" x 0.131" nails at 12" o.c. 3" 14 gage staples at 12" o.c.	typical face nail
Double top plates	8–16d common (3½" x 0.162") 12–3" x 0.131" nails 12–3" 14 gage staples	lap splice
11. Blocking between joists or rafters to top plate	3–8d common (2½" x 0.131") 3–3" x 0.131" nails 3–3" 14 gage staples	toenail
12. Rim joist to top plate	8d (2½" x 0.131") at 6" o.c. 3" x 0.131" nails at 6" o.c. 3" 14 gage staples at 6" o.c.	toenail
13. Top plates, laps and intersections	2–16d common (3½" x 0.162") 3–3" x 0.131" nails 3–3" 14 gage staples	face nail
14. Continuous header, two pieces	16d common (3½" x 0.162")	16" o.c. along edge
15. Ceiling joists to plate	3–8d common (2½" x 0.131") 5–3" x 0.131" nails 5–3" 14 gage staples	toenail
16. Continuous header to stud	4–8d common (2½" x 0.131")	toenail
17. Ceiling joists, laps over partitions (see Section 2308.10.4.1, Table 2308.10.4.1)	3–16d common (3½" x 0.162") minimum, Table 2308.10.4.1 4–3" x 0.131" nails 4–3" 14 gage staples	face nail
18. Ceiling joists to parallel rafters (see Section 2308.10.4.1, Table 2308.10.4.1)	3–16d common (3½" x 0.162") minimum, Table 2308.10.4.1 4–3" x 0.131" nails 4–3" 14 gage staples	face nail
19. Rafter to plate (see Section 2308.10.1, Table 2308.10.1)	3–8d common (2½" x 0.131") 3–3" x 0.131" nails 3–3" 14 gage staples	toenail
20. 1" diagnol brace to each stud and plate	2–8d common (2½" x 0.131") 2–3" x 0.131" nails 3–3" 14 gage staples	face nail
21. 1" x 8" sheathing to each bearing	3–8d common (2½" x 0.131")	face nail
22. Wider 1" x 8" sheathing to each bearing	3–8d common (2½" x 0.131")	face nail
23. Built–up corner studs	16d common (3½ x 0.162") 3" x 0.131" nails 3" 14 gage staples	24" o.c. 16" o.c. 16" o.c.
24. Built–up girder and beams	20d common (4" x 0.192") 32" o.c. 3" x 0.131" nails at 24" o.c. 3" 14 gage staples at 24" o.c.	face nail at top and bottom staggered on opposite sides
	2–20d common (4" x 0.192") 3–3" x 0.131" nails 3–3" 14 gage staples	face nail at ends and at each splice
25. 2" planks	16d common (3½" x 0.162")	at each bearing
26. Collar tie to rafter	3–10d common (3" x 0.148") 4–3" x 0.131" nails 4–3" 14 gage staples	face nail
27. Jack rafter to hip	3–10d common (3" x 0.148") 4–3" x 0.131" nails 4–3" 14 gage staples	toenail
	2–16d common (3½" x 0.162") 3–3" x 0.131" nails 3–3" 14 gage staples	face nail
28. roof rafter to 2–by ridge beam	2–16d common (3½" x 0.162") 3–3" x 0.131" nails 3–3" 14 gage staples	toenail
	2–16d common (3½" x 0.162") 3–3" x 0.131" nails 3–3" 14 gage staples	face nail
29. Joist to band joist	3–16d common (3½" x 0.162") 4–3" x 0.131" nails 4–3" 14 gage staples	face nail
30. Ledger strip	3–16d common (3½" x 0.162") 4–3" x 0.131" nails 4–3" 14 gage staples	face nail at each joist

TABLE 2304.9.1 CONTINUED
FASTENING SCHEDULE

CONNECTION	FASTENING[a,m]	LOCATION
31. Wood structure panels and particleboard[b] Subfloor, roof, and wall sheathing (to framing)	½" and less	6d[c,1] 2⅜" x 0.113" nail[n] 1¾" 16 gage[o]
	19/32" to ¾"	8d[d] or 6d[e] 2⅜" x 0.113" nail[p] 2" 16 gage[o]
	⅞"	8d[c]
	1⅛" to 1 ¼"	10d[d] or 8d[e]
Single floor (combination subfloor–underlayment to framing)	¾" and less	6d[e]
	⅞"	8d[e]
	1⅛" to 1¼"	10d[d] or 8d[e]
32. Panel siding (to framing)	½" and less	6d[f]
	⅝"	8d[f]
33. Fiberboard sheathing[g]	½"	No. 11 gage roofing nail[h] 6d common nail (2" x 0.113")[i] No. 16 gage staple
	25/32"	No. 11 gage roofing nail[h] 8d common nail (2½" x 0.131)[i] No. 16 gage staple
34. Interior paneling	¼"	4d[j]
	⅜"	6d[k]

For SI: 1 inch=25.4 mm

a. Common or box nails are permitted to be used except where otherwise stated.
b. Nails spaces at 6 inches in center at edges. 12 inches at intermediate supports except 6 inches at supports where spans are 48 inches or more. for nailing of wood structural panel and particleboard diaphragms and shear walls, refer to section 2305. Nails for wall sheathing are permitted to be common, box or casing.
c. Common or deformed shank (6d – 2" x 0.113"; 8d – 2½" x 0.131"; 10d – 3" x 0.148").
d. Common (6d – 2" x 0.113"; 8d – 2½" x 0.131"; 10d – 3" x 0.148").
e. Deformed shank (6d – 2" x 0.113"; 8d – 2½" x 0.131"; 10d – 3" x 0.148").
f. Corrosion–resistant siding (6d – 1⅞" x 0.106"; 8d – 2⅜" x 0.128) or casing (6d – 2" x 0.099"; 8d – 2½" x 0.113") nail
g. Fasteners spaced 3 inches on center at exterior edges and 6 inches on center at intermediate supports, when used as structural sheathing. Spacing shall be 6 inches on center on edges and 12 inches on center at intermediate supports for nonstructural applications.
h. Corrosion–resistant roofing nails with ⅞–inch–diameter head and 1½–inch length got ⅝–inch sheathing and 1¾–inch length for 25/32–inch sheathing
i. Corrosion–resistant staples with normal 7/16–inch crown or 1–inch crown and ⅞–inch length for ½–inch length for 25/32–inch sheathing. Panel supports at 16 inches (20 inches if strength axis in the long direction of the panel, unless otherwise marked).
j. Casing (1⅝" x 0.080") or finish (1⅝" x 0.072") nails spaced 6 inches on panel edges, 12 inches at intermediate supports.
k. Panel supports at 24 inches. Casing or finish nails spaces 6 inches on panel edges, 12 inches at intermediate supports.
l. For roof sheathing applications, 3d nails (2⅜" x 0.113") are the minimum required for wood structural panels.
m. Staples shall have a minimum crown width of 7/16 inch.
n. For roof sheathing applications, fasteners spaced 4 inches on center at edges, 8 inches at intermediate supports.
o. Fasteners spaced 4 inches on center at edges, 8 inches at intermediate supports for subfloor and wall sheathing and 3 inches on center at edges, 6 inches at intermediate supports for roof sheathing.
p. Fasteners spaced 4 inches on center at edges, 8 inches at intermediate supports.

TENSION STRAP SCHEDULE (DF–L)

STRAP	MIN END STUDS	FASTENERS	CAPACITY (LB)	ADDITIONAL INFO:
CS16	2x	(22) 0.131"ø NAILS	1,705	CUT LENGTH = 26" + CLEAR SPAN
MST37	(2)2x	(20) 0.162"ø NAILS	2,170	
MST48	(2)2x	(32) 0.162"ø NAILS	3,695	
MST60	(2)2x	(46) 0.162"ø NAILS	4,830	

NOTES:

1. SOME STRAP TYPES NOTED MAY NOT BE USED ON THIS PROJECT.
2. PROVIDE PANEL EDGE NAILING PER SHEAR WALL SCHEDULE AT TENSION STRAP STUDS/POST.
3. CAPACITIES INCLUDE 1.33 STRESS INCREASE.
4. MINIMUM NAIL LENGTHS SHALL BE 2½" FOR 0.131"ø, 3" FOR 0.148"ø AND 3½" FOR 0.162"ø UNO.
5. TOTAL NAILS SPECIFIED, USE HALF THE NAILS AT THE STUDS ABOVE AND BELOW LEVEL BEING CONNECTED. REFERENCE SIMPSON CATALOG FOR DEFINITION OF CLEAR SPAN AND NAIL LOCATIONS.
6. FOR STRAP LENGTHS AND ADDITIONAL INSTALLATION INFORMATION CONSULT CURRENT SIMPSON CATALOG.

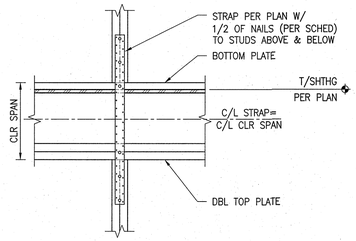

6 TENSION STRAP SCHEDULE AND TYPICAL STRAP CONNECTION AT FLOOR FRAMING

SCALE: 3/4" = 1'–0"

HOLDOWN SCHEDULE (DF–L)

HOLD DOWN	MIN END STUDS	FASTENERS	CAPACITY (LB)	ANCHORAGE TO CONCRETE			
				CAST–IN–PLACE	MECHANICAL	ADHESIVE	
HDU2	(2)2x	(6) SDS ¼"x2½"	3,075	SB ⅝x24	TITEN HD ⅝x8		
HDU4	(2)2x	(10) SDS ¼"x2½"	4,565	SB ⅝x24	N/A		
HDU5	(2)2x	(14) SDS ¼"x2½"	5,645	SB ⅝x24	N/A		
HDU8	(3)2x	(20) SDS ¼"x2½"	7,870	SB ⅞x24	N/A		

NOTES:

1. SOME HOLD–DOWN TYPES NOTED MAY NOT BE USED ON THIS PROJECT.
2. PROVIDE PANEL EDGE NAILING PER SHEAR WALL SCHEDULE AT HOLD–DOWN STUDS/POST.
3. CAPACITIES INCLUDE 1.33 STRESS INCREASE.
4. BASED ON MINIMUM f'c = 2500 PSI CONCRETE.
5. STEM WALLS SHALL BE 6" WIDE MINIMUM FOR ⅝"ø ANCHOR BOLTS AND 8" WIDE MINIMUM FOR ⅞"ø AND LARGER ANCHOR BOLTS.
6. CAST–IN–PLACE (CIP) TYPE ANCHOR BOLTS AT HOLD–DOWNS SHALL HAVE A HEX HEAD WITH A STANDARD CUT WASHER OR A STANDARD HOOK (MINIMUM 3x BOLT DIAMETER).
7. CONTACT ENGINEER FOR POST INSTALLED HOLD–DOWN OPTIONS.
8. THREADED ROD WITH SIMPSON SET OR HILTI HY–200 ADHESIVE.
9. FOR ⅜"ø ANCHOR BOLT, USE STANDARD CUT WASHER BETWEEN SEAT OF ANCHOR AND NUT.
10. TITEN HD SHALL BE USED AT INTERIOR WALLS WHERE HDU2 ARE REQUIRED. SB⅝x24 SHALL ONLY BE USED AT EXTERIOR WALLS

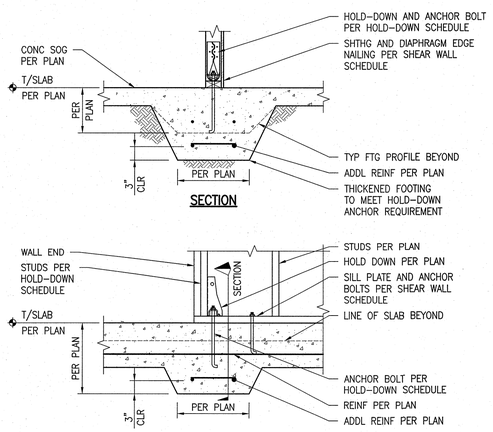

10 HOLD–DOWN SCHEDULE AND TYPICAL HOLD–DOWN ANCHOR AT THICKENED SLAB FOOTING

SCALE: 3/4" = 1'–0"

SHEAR WALL SCHEDULE (DF–L)

TAG	SHEATHING AND FASTENING: GWB & APA RATED PLYWOOD/OSB SHEATHING THICKNESS	PANEL EDGE FASTENING	PANEL FIELD FASTENING	FASTENER SIZE (13)	MINIMUM FRAMING MEMBERS: BOTTOM PLATE	PT SILL PLATE	ABUTTING PANEL EDGE	PANEL EDGE BLKG	MAX STUD SPACING	SHEAR TRANSFER CONNECTIONS: SILL PLATE CONNECTION TO FOUNDATION	BOTTOM PLATE TO RIM/BLKG	RIM/BLKG CONNECTION TO TOP PLATE	CAPACITY
G4	½" GWB ONE FACE	4" OC	12" OC	#6x1¼" TYPE 'W'	2x	2x	2x	2x	16" OC	½" @ 72" OC	0.148"øx3¼" @ 8" OC	A35 @ 32" OC	165 PLF
P6	15/32" ONE SIDE	6" OC	12" OC	0.131"ø	2x	2x	2x	2x	24" OC	5/8" @ 48" OC	0.148"øx3¼" @ 8" OC	A35 @ 32" OC	260 PLF
P4	15/32" ONE SIDE	4" OC	12" OC	0.131"ø	2x	2x	(2)2x	(2)2x	24" OC	5/8" @ 48" OC	0.148"øx3¼" @ 6" OC	A35 @ 16" OC	380 PLF
P3	15/32" ONE SIDE	3" OC	12" OC	0.131"ø	2x	2x	(2)2x	(2)2x	24" OC	5/8" @ 32" OC	0.148"øx3¼" @ 4" OC	A35 @ 16" OC	490 PLF
2P4	15/32" BOTH SIDE	4" OC	12" OC	0.131"ø	2x	3x	(2)2x	(2)2x	16" OC	5/8" @ 16" OC	0.148"øx3¼" @ 6" OC (2) ROWS STAGGERED	A35 @ 8" OC	760 PLF
2P3	15/32" BOTH SIDE	3" OC	12" OC	0.131"ø	2x	3x	(2)2x	(2)2x	16" OC	5/8" @ 16" OC	0.148"øx3¼" @ 4" OC (2) ROWS STAGGERED	A35 @ 8" OC	980 PLF

NOTES:

1. SCHEDULE ASSUMES DOUGLAS–FIR FRAMING AND IS IN CONFORMANCE WITH THE 2012 IBC. GYPSUM WALLBOARD (GWB) SHEAR WALLS SHALL NOT BE USED IN SEISMIC DESIGN CATEGORIES E OR F. ALL PANEL EDGES SHALL BE BLOCKED.
2. REFERENCE THE TYPICAL SHEAR WALL ELEVATION FOR ADDITIONAL INFORMATION.
3. INSTALL PANELS EITHER HORIZONTALLY OR VERTICALLY. 7/16" APA–RATED SHEATHING (OSB) MAY BE USED IN PLACE OF 15/32" SHEATHING PROVIDED THAT ALL STUDS ARE SPACED AT 16" OC.
4. WHERE SHEATHING IS APPLIED TO BOTH SIDES OF WALL, PANEL EDGE JOINTS ON 2X FRAMING SHALL BE STAGGERED SO THAT JOINTS ON OPPOSITE SIDES ARE NOT LOCATED ON THE SAME STUD.
5. PROVIDE SHEAR WALL SHEATHING AND NAILING FOR THE ENTIRE LENGTH OF THE WALLS INDICATED ON THE PLANS. ENDS OF FULL HEIGHT WALLS ARE DESIGNATED BY WINDOWS, OR DOORWAYS OR AS DESIGNATED ON THE PLANS. FOR HOLD–DOWN REQUIREMENTS, REFERENCE PLANS. WALLS DESIGNATED AS PERFORATED SHEAR WALLS REQUIRE SHEATHING ABOVE AND BELOW ALL OPENINGS.
6. SHEATHING EDGE NAILING IS REQUIRED AT ALL HOLD–DOWN POSTS. EDGE NAILING MAY ALSO BE REQUIRED TO EACH STUD USED IN BUILT–UP HOLD–DOWN POSTS. FOR ADDITIONAL INFORMATION, REFERENCE THE HOLD–DOWN DETAILS.
7. INTERMEDIATE FRAMING TO BE 2x MINIMUM MEMBERS. DOUBLE 2x STUDS SHALL BE CONNECTED TOGETHER NAILING THE STUDS TOGETHER WITH NAILS OF THE SAME SIZE AND SPACING AS THE BOTTOM PLATE TO RIM/BLKG CONNECTION.
8. FRAMING CLIPS TO BE MANUFACTURED BY SIMPSON STRONG–TIE. SHEAR VALUES BASED ON 0.131"øx1½" NAILS USED TO ATTACH FRAMING CLIPS DIRECTLY TO FRAMING, USE 0.131"øx2½" NAILS WHERE INSTALLED OVER SHEATHING.
9. WHERE BOTTOM PLATE ATTACHMENT SPECIFIES (2) ROWS OF NAILS, PROVIDE DOUBLE JOIST, RIM JOIST OR EQUAL BELOW. STAGGER NAILS IN ROWS ½" APART MINIMUM.
10. PRESSURE TREATED MATERIAL CAN CAUSE EXCESSIVE CORROSION IN THE FASTENERS. PROVIDE HOT–DIPPED GALVANIZED (ELECTRO–PLATING IS NOT ACCEPTABLE) NAILS, CONNECTOR PLATES (FRAMING ANGLES, ETC.) AND FOR ALL CONNECTORS IN CONTACT WITH PRESSURE TREATED FRAMING MEMBERS. FOR ADDITIONAL INFORMATION, REFERENCE STRUCTURAL NOTES.
11. SIMPSON TITEN HD ANCHOR BOLTS (MIN 8" LENGTH) CAN BE USED AS A 1–TO–1 (SIZE AND SPACING) REPLACEMENT FOR CAST–IN–PLACE ANCHOR BOLTS. CONTACT THE STRUCTURAL ENGINEER OF RECORD FOR OTHER ADHESIVE OR EXPANSION BOLT ALTERNATIVES TO CAST–IN–PLACE ANCHOR BOLTS. SPECIAL INSPECTION MAY BE REQUIRED.
12. NAIL STUDS TO 3x SILL PLATES WITH EITHER (2) 0.148"øx4" END NAILS OR (4) 0.131"øx2½" TOENAILS.
13. MINIMUM NAIL LENGTHS SHALL BE 2½" FOR 0.131"ø, 3" FOR 0.148"ø AND 3½" FOR 0.162"ø UNO.

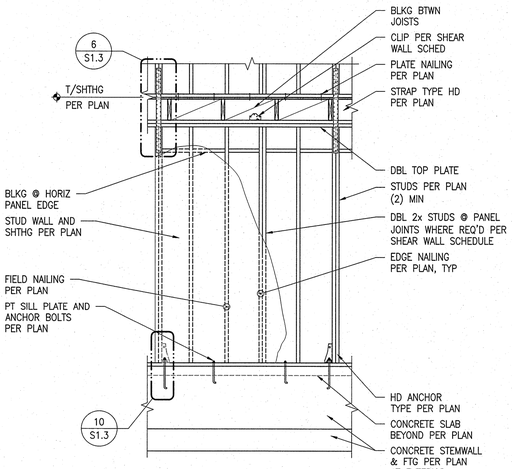

12 TYPICAL SHEAR WALL ELEVATION

SCALE: 3/8" = 1'–0"

CRAIG A. PENFIELD
STATE OF WASHINGTON
22811
REGISTERED
PROFESSIONAL ENGINEER

REV	DATE	BY	REVISIONS

WCE
WHIPPLE CONSULTING ENGINEERS
2626 NORTH SULLIVAN ROAD
SPOKANE VALLEY, WA 99216
PH: 509-893-2617 FAX: 509-926-0227

CIVIL	X STRUCTURAL	SURVEYING	TRAFFIC	PLANNING	LANDSCAPE	OTHER	

LEGACY VILLAS
12-PLEX

LIBERTY LAKE, WA

DRAWN:	JDK
REVIEWED:	CAP
SCALE:	PER PLAN
PROJ #:	16-1624
DATE:	06/20/16

SHEARWALLS, HOLD-DOWNS, AND NAILING SCHEDULE

S1.3

\\WCE_WORK\2016 WCE PROJECTS\2016-1624 Wyatt Arch - Copper Basin Liberty Lake Apt\CAD\CONSTRUCTION\DRAWINGS\DBL 6 PLEX\2016-1624 S1.X General Notes and Typical Details.dwg, 6/20/2016 8:47:42 AM, jdeidt, DWG To PDF.pc3

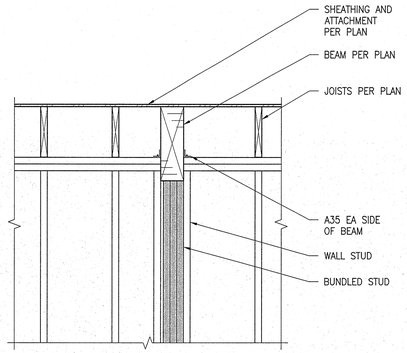

1 TYPICAL FLUSH BEAM FRAMING PARALLEL TO JOISTS

SCALE: 3/4" = 1'–0"

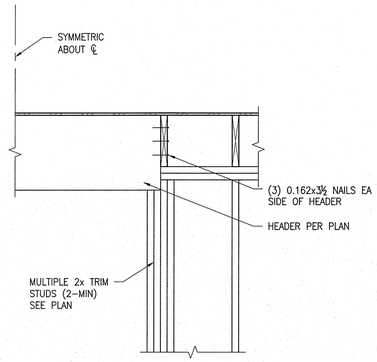

2 TYPICAL FLUSH BEAM FRAMING

SCALE: 3/4" = 1'–0"

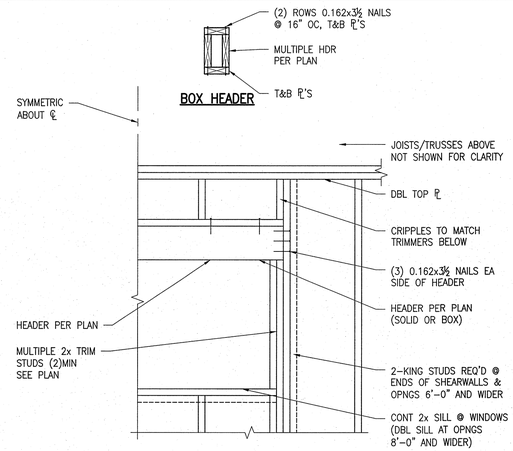

3 TYPICAL HEADER FRAMING @ STRUCTURAL WALL

SCALE: 3/4" = 1'–0"

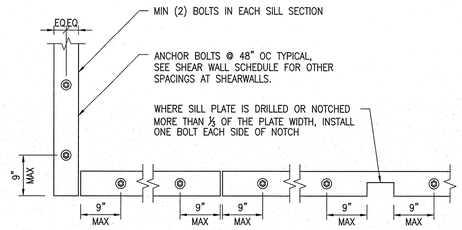

4 TYPICAL SILL PLATE BOLTING

SCALE: 3/4" = 1'–0"

NOTES:

1. PRESCRIPTIVE GUIDELINES FOR ALLOWABLE HOLES ARE FOR SIMPLY SUPPORTED SINGLE SPAN BEAMS CARRYING UNIFORM GRAVITY (VERTICAL) LOADS PERPENDICULAR TO THE WIDE FACES OF THE LAMINATIONS.
2. DRILLING HOLES IN MULTI–SPAN BEAMS OR BEAMS WITH CONCENTRATED LOADS MUST BE APPROVED BY THE ENGINEER OF RECORD.
3. WHEN PRESCRIPTIVE GUIDELINES ARE NOT MET, ALL DRILLED HOLES MUST BE APPROVED BY THE ENGINEER OF RECORD.
4. DRILLED HOLES ARE NOT ALLOWED IN CRITICAL ZONES AS INDICATED ON DETAIL ABOVE WITHOUT APPROVAL OF THE ENGINEER OF RECORD.
5. VERTICAL HOLES IN BEAM MUST BE APPROVED BY THE ENGINEER OF RECORD.
6. NOTCHES IN BEAM MUST BE APPROVED BY THE ENGINEER OF RECORD.
7. MAXIMUM NUMBER OF HOLES SHALL NOT EXCEED (1) HOLES PER EACH 5'–0" LENGTH OF BEAM.
8. D=MAX HOLE DIAMETER (IN.). MAXIMUM HOLE ø SHALL BE 1¾" OR A HOLE DIAMETER EQUAL TO 1/10 BEAM DEPTH, WHICHEVER IS SMALLER.

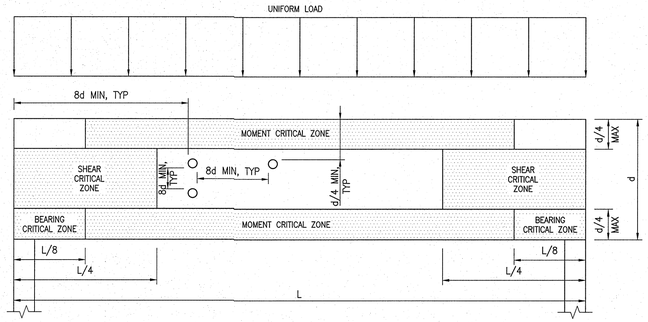

5 PENETRATIONS IN GLU-LAM BEAMS

SCALE: N.T.S.

7 TYPICAL SPLICE OF DOUBLE TOP PLATE

SCALE: 3/4" = 1'–0"

BEARING WALLS AND SHEAR WALLS		
STUD SIZE	**MAX. DRILLED HOLE SIZE**	**MAXIMUM NOTCH DEPTH**
2x4	1" ø	⅞"
2x6	2" ø	1⅜"
2x8	3" ø	1⅞"

TOP & BOT. PLATES (SHEAR WALLS ONLY)			
PLATE SIZE	**MAX. DRILLED HOLE SIZE**	**MIN. EDGE DISTANCE**	**MAXIMUM NOTCH**
2x4	1" ø	1"	NOT ALLOWED
2x6	2" ø	1½"	NOT ALLOWED
2x8	3" ø	2"	NOT ALLOWED

NOTES:

1. PRESCRIPTIVE GUIDELINES FOR ALLOWABLE HOLES ARE FOR SIMPLY SUPPORTED SINGLE SPAN BEAMS, JOISTS AND RAFTERS CARRYING UNIFORM GRAVITY (VERTICAL) LOADS PERPENDICULAR TO THE SHORT DIMENSION OF MEMBERS.
2. DRILLING HOLES IN MULTI–SPAN MEMBERS OR MEMBERS WITH CONCENTRATED LOADS MUST BE APPROVED BY THE ENGINEER OF RECORD.
3. WHEN PRESCRIPTIVE GUIDELINES ARE NOT MET, ALL DRILLED HOLES MUST BE APPROVED BY THE ENGINEER OF RECORD.
4. VERTICAL HOLES IN MEMBERS MUST BE APPROVED BY THE ENGINEER OF RECORD.
5. d= ACTUAL DEPTH OF MEMBER (NOT NOMINAL)
6. TO OBTAIN THE d/4 DEPTH OF NOTCH LOCATED IN THE TOP RIGHT CORNER OF THE DIAGRAM, THE NOTCH MUST BE CONTAINED WITHIN A DISTANCE FROM THE FACE OF SUPPORT NOT GREATER THAN THE DEPTH, d, OF THE MEMBER. THE WIDTH OF THE NOTCH MUST NOT BE GREATER THAN d/3.
7. MAXIMUM NUMBER OF HOLES SHALL NOT EXCEED (2) HOLES PER EACH 5'–0" LENGTH OF BEAM. ONLY (2) HOLES ARE ALLOWED IN THE MIDDLE 1/3 OF THE MEMBER.

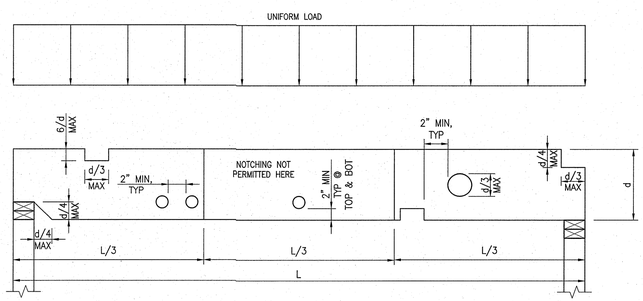

9 NOTCHING AND BORING GUIDE FOR SOLID SAWN BEAMS, JOISTS AND RAFTERS

SCALE: 3/4" = 1'–0"

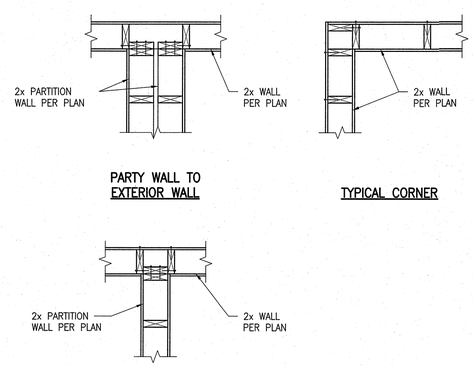

11 TYPICAL WALL INTERSECTION FRAMING

SCALE: 3/4" = 1'–0"

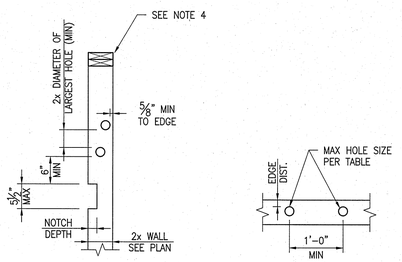

NOTES:

1. DO NOT BORE HOLES OR NOTCH STUDS MORE THAN INDICATED IN ABOVE TABLES AND SKETCH.
2. VERIFY ALL PLUMBING WALL LOCATIONS W/ ARCH'L DRAWINGS.
3. DO NOT OVERCUT NOTCHES.
4. PLACE AN ADDITIONAL STUD AT JOIST BEARING LOCATION ADJACENT TO HOLE IN TOP PLATE.
5. HOLES & NOTCHES SHALL NOT BE LOCATED WITHIN THE SAME CROSS SECTION OF STUD.
6. CONTACT ENGINEER OF RECORD FOR HOLES OR NOTCHES THAT DO NOT MEET THE REQUIREMENT ABOVE.

12 NOTCHING & BORING GUIDELINES @ PLUMBING WALL

SCALE: 3/4" = 1'–0"

CRAIG A. PENFIELD — STATE OF WASHINGTON — 19911 — REGISTERED PROFESSIONAL ENGINEER

REVISIONS

REV	DATE	BY

WCE
WHIPPLE CONSULTING ENGINEERS
2528 NORTH SULLIVAN ROAD
SPOKANE VALLEY, WA 99216
PH: 509-892-3917 FAX: 509-926-0227

CIVIL | X STRUCTURAL | SURVEYING | TRAFFIC | PLANNING | LANDSCAPE | OTHER

LEGACY VILLAS
12-PLEX
LIBERTY LAKE, WA

DRAWN:	JDK
REVIEWED:	CAP
SCALE:	PER PLAN
PROJ #:	16-1624
DATE:	06/20/16

STRUCTURAL TYPICAL DETAILS

S1.4

I:\WCE_WORK\2016 WCE PROJECTS\2016-1624 Wyatt Arch - Copper Basin Liberty Lake Apt\ENGINEERING\STRUCTURAL\DRAWINGS\SHEETS\S1.4 General Notes and Typical Details.dwg, 6/20/2016 8:47:53 AM, jarodk, DWG To PDF.pc3

NOTES:
1. SEE NOTES ON FOUNDATION PLAN FOR ADDITIONAL REINFORCEMENT.
2. PIPE & CONDUIT MUST RUN PERP. THRU WALL.
3. VERT. & HORZ. CLEAR SPACE BETWEEN ADJACENT PIPE SLEEVES SHALL NOT BE LESS THAN THE DIAMETER OF THE LARGER SLEEVE.

1 TYPICAL PIPE OR CONDUIT PENETRATIONS AT FOUNDATION

SCALE: N.T.S.

NOTES:
1. CONSTRUCTION/CONTROL JOINT LOCATIONS AT CONTRACTORS DISCRETION UNLESS NOTED OTHERWISE ON PLANS. MAXIMUM ENCLOSED SQUARE FOOTAGE AREA TO BE 144 SQUARE FEET, WITH MAXIMUM PANEL ASPECT RATIO OF 1.3 TO 1.0.
2. USE "EARLY ENTRY DRY-CUT SAW" AS SOON AS POSSIBLE WITHOUT CAUSING RAVELING OF CONCRETE EDGES. SAWCUT ALONG SHORT DIRECTION OF POUR FIRST

3 TYPICAL CONCRETE SLAB JOINT

SCALE: N.T.S.

f'c = 3000psi						
BAR SIZE	DEVELOPMENT LENGTH			LAP SPLICE		
	TENSION		COMPRESSION	TENSION		COMPRESSION
	TOP BARS	OTHER BARS	ALL BARS	TOP BARS	OTHER BARS	ALL BARS
#3	22	17	9	28	22	12
#4	29	22	11	37	29	15
#5	36	28	14	47	36	19
#6	43	33	17	56	43	23
#7	63	48	20	81	63	27
#8	72	55	22	93	72	30

NOTES:
1. VALUES FOR UNCOATED REINFORCING AND NORMAL WEIGHT CONCRETE WITH CLEAR SPACING > db, CLEAR COVER > db AND MINIMUM STIRRUPS OR TIES THROUGHOUT Ld OR CLEAR SPACING > 2db AND CLEAR COVER > db.
2. DEVELOP ALL REINFORCING IN STRUCTURAL SLABS WITH MINIMUM DEVELOPMENT LENGTH Ld.
3. TOP BAR = HORIZONTAL BAR WITH MORE THAN 12" OF FRESH CONCRETE BELOW OR AS NOTED ON DOCUMENTS AS "TOP BAR".
4. UNLESS NOTED OTHERWISE, ALL LAPS SHALL BE MINIMUM CLASS B OR CLASS B (TOP BARS).
5. ALL TABULATED VALUES ARE IN INCHES.

4 TYPICAL LAP SPLICE AND DEVELOPMENT LENGTH SCHEDULE

SCALE: N.T.S.

NOTES:
1. FOR SPLICE LENGTHS, REFERENCE LAP SPLICE AND DEVELOPMENT LENGTH SCHEDULE.
2. FOR WALL REINFORCING, REFERENCE PLAN.
3. AT FOOTING AND STEM WALLS, CORNER REINFORCING TO MATCH FOOTING AND STEM WALL HORIZONTAL REINFORCING.

5 NOT USED

SCALE: $^3/_4$" = 1'-0"

6 NOT USED

SCALE: $^3/_4$" = 1'-0"

7 TYPICAL CORNER REINF AT CONCRETE WALLS

SCALE: N.T.S.

d = DEFORMED BAR DIAMETER, D = BEND DIAMETER

8 TYPICAL REBAR BENDING SCHEDULE

SCALE: N.T.S.

TYPICAL ANCHOR BOLT SCHEDULE						
INSTALLATION TYPE	CAST-IN-PLACE (PRE-AUTHORIZED) [2]				DRILL-IN-OPTIONS (SUBMITTAL REQUIRED) [3]	
BOLT TYPE	STD J-BOLT	HEADED ANCHOR	THREADED ROD ANCHOR	SIMPSON "SSTB" ANCHOR BOLT	ADHESIVE ANCHOR	EXPANSION ANCHOR
EMBEDMENT REQUIREMENTS	7½"	12xDIA		PER MFR	[4]	
LIMITS	⅝"ø MAX	⅝"ø THRU 2½"ø		FOR WOOD FRAME ONLY	⅝"ø THRU 1"ø	

PROJECTION [1]
MIN EMBED UNO PER PLAN

NOTES:
1. CONTRACTOR SHALL DETERMINE THE REQUIRED THREAD PROJECTION SUITABLE FOR THE THICKNESS OF THE MATERIAL BEING FASTENED PLUS GROUT ALLOWANCE, IF ANY, AND CONSTRUCTION TOLERANCES, UNO.
2. CONTRACTOR MAY SELECT APPROPRIATE CAST-IN-PLACE ANCHOR BOLT OPTION WITHOUT SUBMITTAL.
3. DRILL-IN OPTIONS ARE NOT APPROPRIATE AT ALL CONDITIONS. IF DRILL-IN METHOD IS PREFERRED, SUBMIT MANUFACTURER'S INFORMATION, ALLOWABLE LOAD VS. EMBEDMENT DATA AND LOCATIONS WHERE SUBSTITUTIONS ARE REQUESTED. ENGINEER WILL DETERMINE IF SUBSTITUTION IS APPROPRIATE FOR LOCATION AND LOADING.
4. EMBEDMENT OF DRILL-IN ANCHORS SHALL BE PER ENGINEER'S SUBMITTAL REVIEW COMMENTS. EMBEDMENT SHALL BE (9) NINE TIMES THE NOMINAL ANCHOR DIAMETER, UNO.
5. AT PRESSURE TREATED SILLS, PROVIDE HOT DIPPED GALVANIZED OR STAINLESS STEEL ANCHORS.

9 NOT USED

SCALE: $^3/_4$" = 1'-0"

10 NOT USED

SCALE: $^3/_4$" = 1'-0"

11 NOT USED

SCALE: $^3/_4$" = 1'-0"

12 TYPICAL ANCHOR BOLT SCHEDULE

SCALE: N.T.S.

CRAIG A. PENFIELD
STATE OF WASHINGTON
42811 REGISTERED PROFESSIONAL ENGINEER

REV	DATE	BY	REVISIONS

WCE
WHIPPLE CONSULTING ENGINEERS
2528 NORTH SULLIVAN ROAD
SPOKANE VALLEY, WA 99216
PH: 509-893-2617 FAX: 509-926-0227

CIVIL | X STRUCTURAL | SURVEYING | TRAFFIC | PLANNING | LANDSCAPE | OTHER

LEGACY VILLAS
12-PLEX
LIBERTY LAKE, WA

DRAWN:	JDK
REVIEWED:	CAP
SCALE:	PER PLAN
PROJ #:	16-1624
DATE:	06/20/16

STRUCTURAL TYPICAL DETAILS

S1.5

:\WCE_WORK\2016 WCE PROJECTS\2016-1624 Wyatt Arch - Copper Basin Liberty Lake Apt\DWG\STRUCTURAL\DRAWINGS\DBL 6 PLEX\2016-1624 S1.X General Notes and Typical Details.dwg, 6/20/2016 8:47:43 AM, jaredk, DWG To PDF.pc3

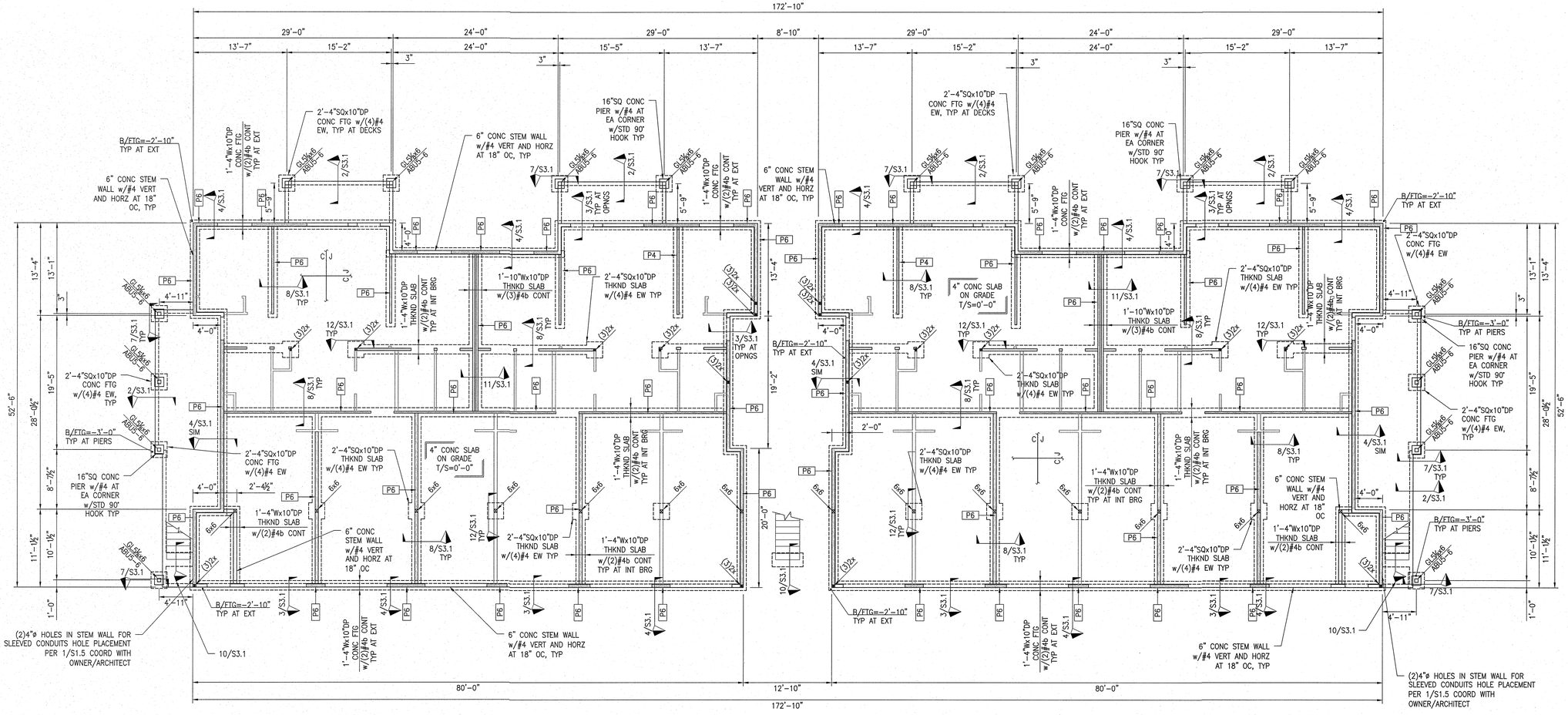

12 PLEX - FOUNDATION AND MAIN FLOOR FRAMING PLAN

SCALE: 1/8" = 1'-0"

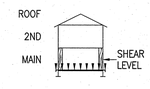

FOUNDATION PLAN NOTES:

1. REFERENCE S1.1 AND S1.2 FOR STRUCTURAL GENERAL NOTES AND OTHER STRUCTURAL DESIGN CRITERIA NOT SHOWN ON THIS SHEET. REFERENCE S1.3, S1.4 AND S1.5 FOR TYPICAL CONSTRUCTION DETAILS.
2. VERIFY ALL NEW AND EXISTING DIMENSIONS WITH THE ARCHITECTURAL DRAWINGS. ALL DOOR OPENINGS IN FOUNDATION WALLS, DRAINS AND SLOPES, BLOCKOUTS FOR PLUMBING, SPRINKLERS AND HVAC SHALL BE LOCATED AND COORDINATED BY THE CONTRACTOR PRIOR TO POURING CONCRETE.
3. ALL FOOTINGS AND SLABS TO BEAR ON COMPETENT NATIVE SOIL AND/OR STRUCTURAL FILL PER GEOTECHNICAL REPORT. PROVIDE FREE-DRAINING GRANULAR FILL UNDER SLABS PER GEOTECHNICAL REPORT AND/OR ARCHITECTURAL PLANS.
4. TOP OF SLAB ELEVATION ASSUMED TO BE 0'-0". COORDINATE FINISHED FLOOR ELEVATION WITH ARCHITECT/CIVIL ENGINEER.
5. BOTTOM OF ALL EXT FOOTINGS SHALL BEAR A MINIMUM OF 2'-0" BELOW LOWEST ADJACENT FINISHED GRADE. BOTTOM OF FOOTING (B FTG) IS ASSUMED TO BE -2'-10" BELOW TOP OF SLAB. COORDINATE B FTG ELEVATION WITH ARCHITECT/CIVIL ENGINEER WHERE BUILDING STEPS OCCUR.
6. CJ INDICATES CONTROL JOINT. FOR INFORMATION, REFERENCE S1.5.
7. MOISTURE PROOF ALL CONCRETE STEM WALLS PER ARCHITECT.
8. SILL PLATE TO BE 2x PRESSURE TREATED, UNO. SILL PLATE ANCHOR BOLTS AT STEM WALLS SHALL BE ½"ø x10" W/ MIN 7" EMBED SPACED 6'-0" OC UNO. ANCHOR BOLTS AT INTERIOR BEARING AND SHEAR WALLS AT THICKENED SLABS SHALL BE SIMPSON TITEN HD ½"ø x6" SPACED MAX 4'-0" OC OR PER SHEAR WALL SCHEDULE S1.3. STAGGER SPACING AT PARTITION WALLS.

SHEAR WALL FRAMING NOTES:

1. REFERENCE S1.1 AND S1.2 FOR STRUCTURAL GENERAL NOTES AND OTHER STRUCTURAL DESIGN CRITERIA NOT SHOWN ON THIS SHEET. REFERENCE S1.3, S1.4 AND S1.5 FOR TYPICAL CONSTRUCTION DETAILS.
2. ALL DIMENSIONS AND ELEVATIONS SHALL BE COORDINATED WITH THE ARCHITECTS DRAWINGS PRIOR TO CONSTRUCTION. REFERENCE MECHANICAL, PLUMBING, ELECTRICAL AND SPRINKLER DRAWINGS FOR ALL DUCTS, CHASES AND PIPES.
3. SHEAR WALLS, POSTS AND BUNDLED STUDS SHOWN ON THIS PLAN ARE BETWEEN THE FRAMING PLANS ABOVE AND BELOW. REFERENCE THE FRAMING PLAN BELOW FOR BEARING WALL AND BEAM AND JOIST FRAMING REQUIREMENTS.
4. FOR SHEAR WALL AND NAILING REQUIREMENTS, REFERENCE SHEAR WALL SCHEDULE, S1.3. FOR TYPICAL SHEAR WALL ELEVATION, REFERENCE S1.3. ALL EXTERIOR WALLS TO BE SHEATHED WITH APA RATED PLYWOOD/OSB AND NAILED 0.131"ø x3" NAILS AT 6" OC EDGE, 12" OC FIELD.
5. HD INDICATES HOLD-DOWN. REFERENCE HOLD-DOWN SCHEDULE, S1.3. HOLD-DOWNS REQUIRED AT LOCATIONS SHOWN, NOT ALL SHEAR WALLS REQUIRE HOLD-DOWNS. REFERENCE S1.3 FOR TYPICAL HOLD-DOWN ELEVATIONS.

STUD WALL SCHEDULE

EXTERIOR:	2X6 @ 16" OC
CORRIDOR:	2X6 @ 16" OC
UNIT INTERIOR BEARING:	2X4 @ 16" OC
NON-UNIT INTERIOR BEARING:	2X6 @ 16" OC
INTERIOR NON-BEARING:	2X4 @ 16" OC
DOUBLE PARTITION:	2X4 @ 16" OC (EA SIDE)
SINGLE PARTITION:	2X6 @ 16" OC

FOR STUD GRADE REFER TO STRUCTURAL GENERAL NOTES S1.1 AND S1.2. REFER TO ARCHITECTURAL PLANS FOR DIMENSIONS OF PLUMBING WALLS (MIN 2X6 @ 16" OC)

TYPICAL DETAILS

1/S1.5	TYPICAL PIPE OR CONDUIT PENETRATIONS AT FOUNDATION
3/S1.5	TYPICAL CONCRETE SLAB JOINT
4/S1.5	TYPICAL LAP, SPLICE AND DEVELOPMENT LENGTH SCHEDULE
7/S1.5	TYPICAL CORNER REINFORCEMENT AT CONCRETE WALLS
8/S1.5	TYPICAL REBAR BENDING SCHEDULE
12/S1.5	TYPICAL ANCHOR BOLT SCHEDULE

CRAIG A. PENFIELD — STATE OF WASHINGTON — 42811 — REGISTERED PROFESSIONAL ENGINEER

REV	DATE	BY	REVISIONS

WCE
WHITTLE CONSULTING ENGINEERS
2526 NORTH SULLIVAN ROAD
SPOKANE VALLEY, WA 99216
PH: 509-893-2617 FAX: 509-926-0227

CIVIL	STRUCTURAL	SURVEYING	TRAFFIC	PLANNING	LANDSCAPE	OTHER
	X					

LEGACY VILLAS
12-PLEX
LIBERTY LAKE, WA

DRAWN:	JDK
REVIEWED:	CAP
SCALE:	PER PLAN
PROJ #:	16-1624
DATE:	06/20/16

FOUNDATION AND MAIN FLOOR FRAMING PLAN

S2.1

\\WCE_WORK\2016 WCE PROJECTS\2016-1624 Wyatt Arch - Copper Basin Liberty Lake Apts\DWGS\STRUCTURAL\SHEARWALLS\SHEAR WALL 6 PLEX.dwg, 6/20/2016 8:47:57 AM, jarvik, DWG To PDF.pc3

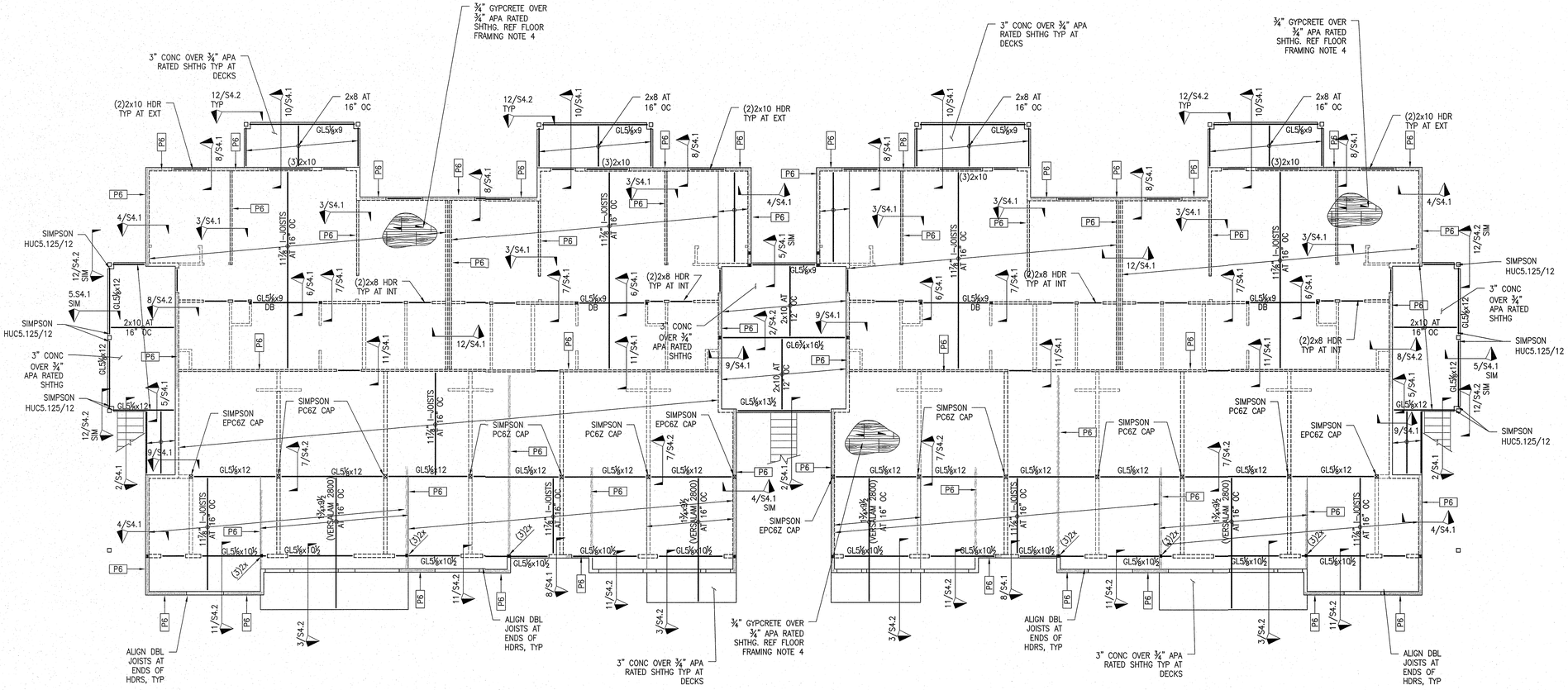

12 PLEX - SECOND FLOOR FRAMING AND SHEAR PLAN

SCALE: 1/8" = 1'-0"

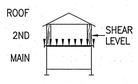

FLOOR FRAMING NOTES:

1. REFERENCE S1.1 AND S1.2 FOR STRUCTURAL GENERAL NOTES AND OTHER STRUCTURAL DESIGN CRITERIA NOT SHOWN ON THIS SHEET. REFERENCE S1.3, S1.4 AND S1.5 FOR TYPICAL CONSTRUCTION DETAILS.
2. ALL DIMENSIONS AND ELEVATIONS SHALL BE COORDINATED WITH THE ARCHITECTS DRAWINGS PRIOR TO CONSTRUCTION. REFERENCE MECHANICAL, PLUMBING, ELECTRICAL AND SPRINKLER DRAWINGS FOR ALL DUCTS, CHASES AND PIPES.
3. REFERENCE THE FOUNDATION PLAN BELOW FOR BEARING AND SHEAR WALLS, POSTS AND BUNDLED STUDS, AND CONNECTION HARDWARE.
4. APA RATED T&G FLOOR SHEATHING THICKNESS PER PLAN. REFERENCE THE STRUCTURAL GENERAL NOTES FOR SHEATHING REQUIREMENTS AND SPAN RATINGS. SHEATHING SHALL BE GLUED & NAILED TO FRAMING WITH 0.131"Øx3" NAILS AT 6"OC AT PANEL EDGES AND @ 12"OC FIELD, UNO.
5. JOIST AND BEAM HANGERS SHALL BE PER DETAIL OR SPECIFICALLY CALLED OUT ON PLAN WHERE REQUIRED.
6. PROVIDE FULL HEIGHT SOLID BLOCKING OR SINGLE JOISTS UNDER ALL SHEAR WALLS AND BEARING WALLS. AT SHEAR WALLS PARALLEL TO FRAMING, ALIGN (1) JOIST OVER SHEAR WALL (ADDITIONAL JOISTS MAY BE REQUIRED). REFERENCE SHEAR WALL PLAN ABOVE FOR SHEAR WALL LOCATIONS.
7. BEAMS ARE FLUSH FRAMED WITH JOISTS UNO ON DETAILS OR ON PLANS AS "DB" INDICATING THAT A DROPPED BEAM IS REQUIRED. FOR BEAM SUPPORTS REFERENCE THE STUD AND SHEAR WALL PLAN BELOW.
8. BUNDLED STUDS AND TRIMMERS TO BE CONTINUOUS TO THE FOUNDATION OR SUPPORTING BEAM BELOW.

SHEAR WALL FRAMING NOTES:

1. REFERENCE S1.1 AND S1.2 FOR STRUCTURAL GENERAL NOTES AND OTHER STRUCTURAL DESIGN CRITERIA NOT SHOWN ON THIS SHEET. REFERENCE S1.3, S1.4 AND S1.5 FOR TYPICAL CONSTRUCTION DETAILS.
2. ALL DIMENSIONS AND ELEVATIONS SHALL BE COORDINATED WITH THE ARCHITECTS DRAWINGS PRIOR TO CONSTRUCTION. REFERENCE MECHANICAL, PLUMBING, ELECTRICAL AND SPRINKLER DRAWINGS FOR ALL DUCTS, CHASES AND PIPES.
3. SHEAR WALLS, POSTS AND BUNDLED STUDS SHOWN ON THIS PLAN ARE BETWEEN THE FRAMING PLANS ABOVE AND BELOW. REFERENCE THE FRAMING PLAN BELOW FOR BEARING WALL AND BEAM AND JOIST FRAMING REQUIREMENTS.
4. FOR SHEAR WALL AND NAILING REQUIREMENTS, REFERENCE SHEAR WALL SCHEDULE, S1.3. FOR TYPICAL SHEAR WALL ELEVATION, REFERENCE S1.3. ALL EXTERIOR WALLS TO BE SHEATHED WITH APA RATED PLYWOOD/OSB AND NAILED 0.131"Øx3" NAILS AT 6" OC EDGE, 12" OC FIELD.
5. HD INDICATES HOLD-DOWN. REFERENCE HOLD-DOWN SCHEDULE, S1.3. HOLD-DOWNS REQUIRED AT LOCATIONS SHOWN, NOT ALL SHEAR WALLS REQUIRE HOLD-DOWNS. REFERENCE S1.3 FOR TYPICAL HOLD-DOWN ELEVATIONS.

STUD WALL SCHEDULE

EXTERIOR:	2X6 @ 16" OC
CORRIDOR:	2X6 @ 16" OC
UNIT INTERIOR BEARING:	2X4 @ 16" OC
NON-UNIT INTERIOR BEARING:	2X6 @ 16" OC
INTERIOR NON-BEARING:	2X4 @ 16" OC
DOUBLE PARTITION:	2X4 @ 16" OC (EA SIDE)
SINGLE PARTITION:	2X6 @ 16" OC

FOR STUD GRADE REFER TO STRUCTURAL GENERAL NOTES S1.1 AND S1.2. REFER TO ARCHITECTURAL PLANS FOR DIMENSIONS OF PLUMBING WALLS (MIN 2X6 @ 16" OC)

CRAIG A. PENFIELD STATE OF WASHINGTON 42811 REGISTERED PROFESSIONAL ENGINEER

REV	DATE	BY	REVISIONS

WCE
WHIPPLE CONSULTING ENGINEERS
720 N. THIERMAN ROAD, SUITE 310
SPOKANE VALLEY, WA 99216
PH: 509-893-2617 FAX: 509-926-0227

CIVIL
X STRUCTURAL
SURVEYING
TRAFFIC
PLANNING
LANDSCAPE
OTHER

LEGACY VILLAS
12-PLEX
LIBERTY LAKE, WA

DRAWN:	JDK
REVIEWED:	CAP
SCALE:	PER PLAN
PROJ #:	16-1624
DATE:	06/20/16

SECOND FLOOR FRAMING AND SHEAR PLAN

S2.2

I:\WCE_WORK\2016 WCE PROJECTS\2016-1624 Wyatt Arch - Copper Basin-Liberty Lake Apts\DWG\STRUCTURAL\DRAWINGS\DRL 6 PLEX\2016-1624 DRL 6 PLEX S1.dwg, 6/20/2016 8:48:02 AM, jjarvik, DWG To PDF.pc3

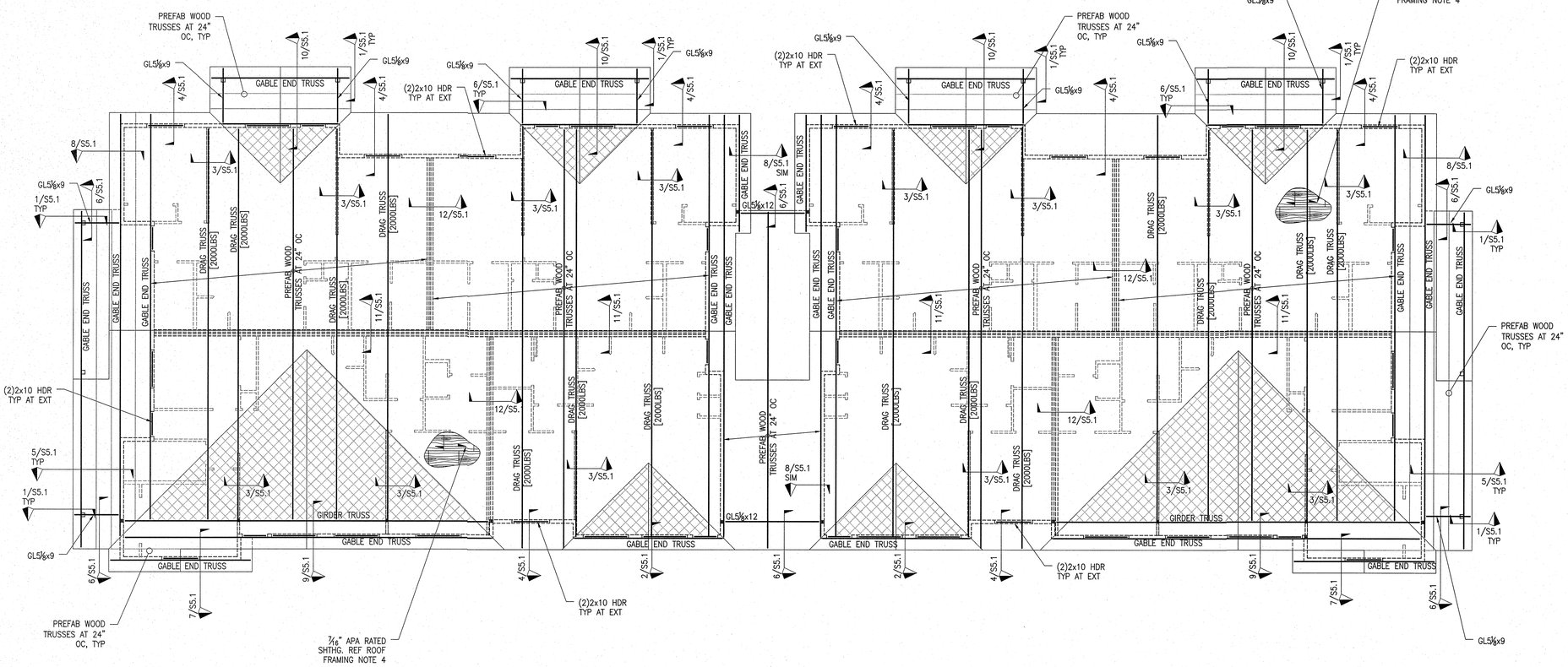

12 PLEX - ROOF FRAMING PLAN

SCALE: 1/8" = 1'-0"

ROOF FRAMING NOTES:

1. REFERENCE S1.1 AND S1.2 FOR STRUCTURAL GENERAL NOTES AND OTHER STRUCTURAL DESIGN CRITERIA NOT SHOWN ON THIS SHEET. REFERENCE S1.3, S1.4 AND S1.5 FOR TYPICAL CONSTRUCTION DETAILS.
2. ALL DIMENSIONS AND ELEVATIONS SHALL BE COORDINATED WITH THE ARCHITECTS DRAWINGS PRIOR TO CONSTRUCTION. REFERENCE MECHANICAL, PLUMBING, ELECTRICAL AND SPRINKLER DRAWINGS FOR ALL DUCTS, CHASES AND PIPES.
3. REFERENCE THE FRAMING PLAN BELOW FOR BEARING AND SHEAR WALLS, POSTS AND BUNDLED STUDS, AND CONNECTION HARDWARE.
4. APA RATED ROOF SHEATHING THICKNESS PER PLAN. REFERENCE THE STRUCTURAL GENERAL NOTES FOR SHEATHING REQUIREMENTS AND SPAN RATINGS. SHEATHING TO BE NAILED TO ROOF FRAMING WITH 0.131"øx3" NAILS @ 6"OC AT PANEL EDGES AND @ 12"OC FIELD, UNO.
5. THE DESIGN AND ENGINEERING OF ROOF TRUSSES AND SPACING ARE PER THE TRUSS MANUFACTURER. REFERENCE THE STRUCTURAL GENERAL NOTES FOR DESIGN LOADS AND SUBMITTAL REQUIREMENTS. ROOF TRUSSES SHOWN ARE A SUGGESTED LAYOUT.
6. CROSS-HATCHED REGION SHOWS APPROXIMATE AREAS OF OVER-FRAMING. TRUSSES SUPPORTING OVER-FRAMING SHALL BE DESIGNED TO CARRY LOADS FROM THE OVER-FRAMING IN ADDITION TO THE DESIGN LOADS SPECIFIED IN THE STRUCTURAL GENERAL NOTES. THE OVER-FRAMING DESIGN IS THE RESPONSIBILITY OF THE TRUSS MANUFACTURER.
7. ALL GIRDER TRUSSES SHALL BE SUPPORTED BY A MINIMUM OF THREE STUDS OR BEAR DIRECTLY ON SUPPORTING BEAM. TRUSS MANUFACTURER SHALL SUBMIT GIRDER TRUSSES REACTIONS TO THE ENGINEER OF RECORD. ALL MULTIPLE STUDS SUPPORTING HIP MASTER AND GIRDER TRUSSES TO CONTINUE TO FOUNDATION.
8. PROVIDE SIMPSON H2.5T HURRICANE TIES AT ALL ROOF TRUSSES TYPICAL. TRUSS HANGERS SHALL BE SUPPLIED AND DESIGNED BY THE TRUSS SUPPLIER.

CRAIG A. PENFIELD
STATE OF WASHINGTON
42811
REGISTERED
PROFESSIONAL ENGINEER

REV	DATE	BY	REVISIONS

WCE
WHIPPLE CONSULTING ENGINEERS
2528 NORTH SULLIVAN ROAD
SPOKANE VALLEY, WA 99216
PH: 509-893-2617 FAX: 509-926-0227

CIVIL	
X	STRUCTURAL
	SURVEYING
	TRAFFIC
	PLANNING
	LANDSCAPE
	OTHER

LEGACY VILLAS
12-PLEX
LIBERTY LAKE, WA

DRAWN:	JDK
REVIEWED:	CAP
SCALE:	PER PLAN
PROJ #:	16-1624
DATE:	06/20/16

ROOF FRAMING PLAN

S2.3

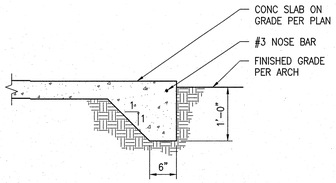

1 NOT USED
SCALE: 3/4" = 1'-0"

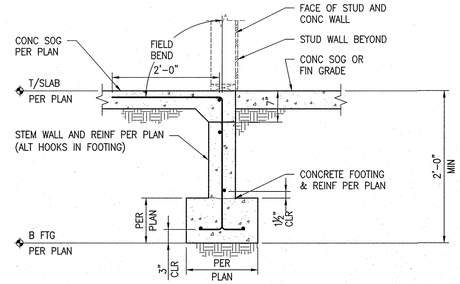

2 SLAB EDGE AT PATIO
SCALE: 3/4" = 1'-0"

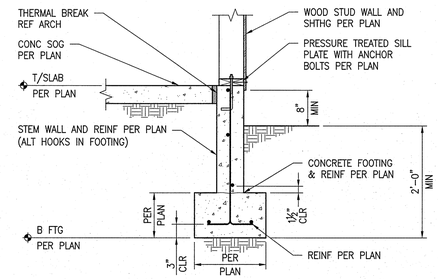

NOTE:
COORDINATE ALIGNMENT OF SHTHG & STEM WALL.

3 SLAB OVER-POUR AT OPENINGS
SCALE: 3/4" = 1'-0"

NOTES:
1. COORDINATE ALIGNMENT OF SHTHG & STEM WALL.
2. EXTERIOR SLAB ON GRADE AT SIM.

4 WOOD STUD WALL AT EXTERIOR FOOTING
SCALE: 3/4" = 1'-0"

5 NOT USED
SCALE: 3/4" = 1'-0"

6 NOT USED
SCALE: 3/4" = 1'-0"

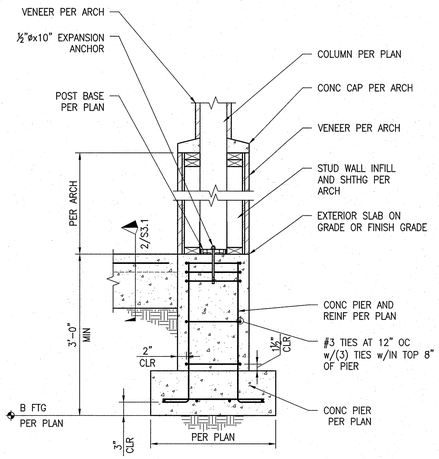

7 TYPICAL DECK FOOTING
SCALE: 3/4" = 1'-0"

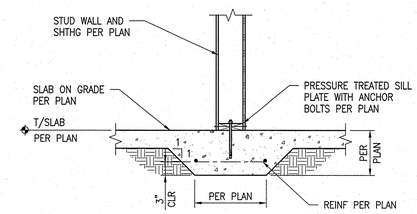

NOTE:
COLD JOINT BETWEEN FOOTING AND SLAB NOT PERMITTED

8 THICKENED SLAB AT INTERIOR STRUCTURAL WALL
SCALE: 3/4" = 1'-0"

9 NOT USED
SCALE: 3/4" = 1'-0"

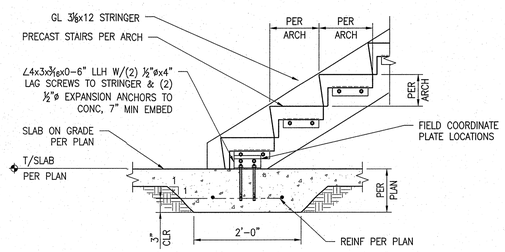

NOTE:
COLD JOINT BETWEEN FOOTING AND SLAB NOT PERMITTED

10 THICKENED SLAB SUPPORT AT STAIRS
SCALE: 3/4" = 1'-0"

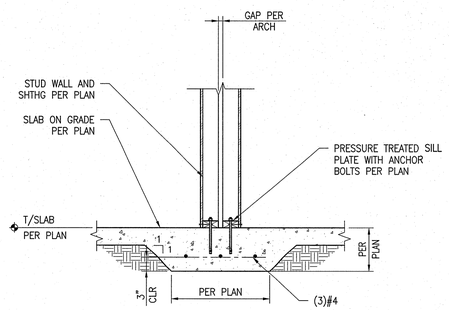

NOTES:
1. COLD JOINT BETWEEN FOOTING AND SLAB NOT PERMITTED
2. ALTERNATIVE AB: USE TITEN HD W/ SAME SIZE AND SPACING

11 THICKENED SLAB AT INTERIOR PARTITION WALL
SCALE: 3/4" = 1'-0"

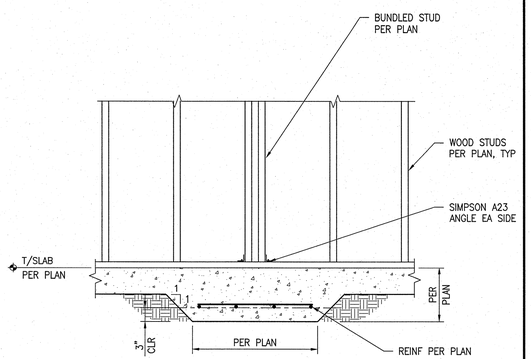

NOTE:
COLD JOINT BETWEEN FOOTING AND SLAB NOT PERMITTED

12 THICKENED SLAB FOOTING AT WOOD POST
SCALE: 3/4" = 1'-0"

CRAIG A. PENFIELD
STATE OF WASHINGTON
20911
REGISTERED
PROFESSIONAL ENGINEER

REVISIONS

REV	DATE	BY

WCE
WHIPPLE CONSULTING ENGINEERS
720 N. SULLIVAN ROAD
SPOKANE VALLEY, WA 99216
PH: 509-893-2617 FAX: 509-926-0227

CIVIL	X STRUCTURAL	SURVEYING	TRAFFIC	PLANNING	LANDSCAPE	OTHER	

LEGACY VILLAS
12-PLEX

LIBERTY LAKE, WA

DRAWN:	JDK
REVIEWED:	CAP
SCALE:	PER PLAN
PROJ #:	16-1624
DATE:	06/20/16

FOUNDATION DETAILS

S3.1

\\WCE_WORK\2016 WCE PROJECTS\2016-1624 Wyatt Arch - Copper Basin Liberty Lake Apt\PWG\STRUCTURAL\DRAWINGS\DWL 6 FLEX\2016.1625 S3.Details3.dwg, 6/20/2016 8:48:20 AM, jamdk, DWG To PDF.pc3

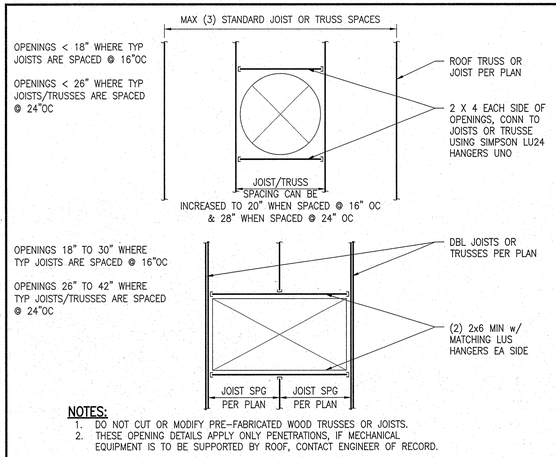

NOTES:

1. DO NOT CUT OR MODIFY PRE-FABRICATED WOOD TRUSSES OR JOISTS.
2. THESE OPENING DETAILS APPLY ONLY PENETRATIONS, IF MECHANICAL EQUIPMENT IS TO BE SUPPORTED BY ROOF, CONTACT ENGINEER OF RECORD.

1 TYPICAL FRAMING AT FLOOR/ROOF OPENINGS

SCALE: 3/4" = 1'-0"

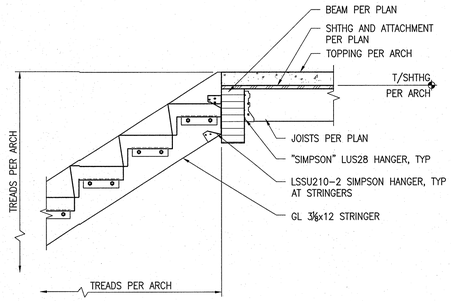

2 TYPICAL INTERIOR PRECAST STAIRWAY ELEVATION

SCALE: 3/4" = 1'-0"

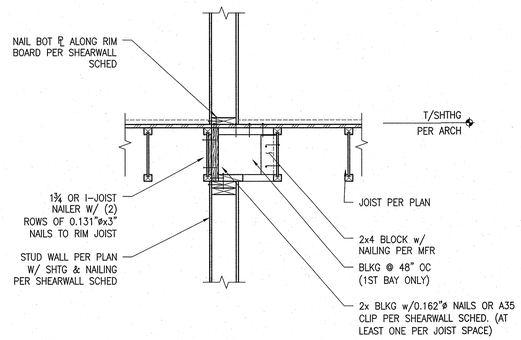

3 PARALLEL JOISTS AT INTERIOR SHEAR WALL

SCALE: 3/4" = 1'-0"

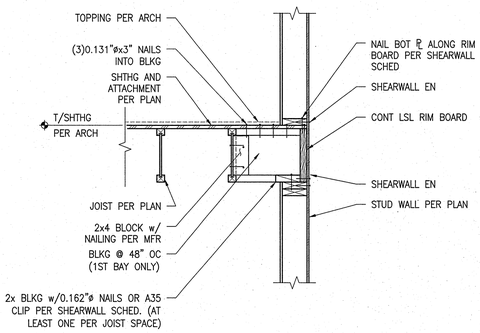

4 PARALLEL JOISTS AT EXTERIOR STUD WALL

SCALE: 3/4" = 1'-0"

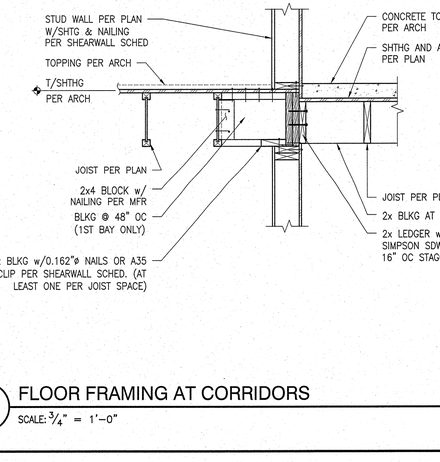

5 CORRIDORS JOISTS TO FLUSH BEAM

SCALE: 3/4" = 1'-0"

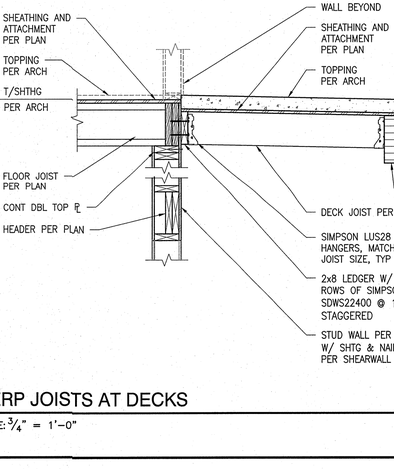

6 JOIST OVER DROPPED BEAM

SCALE: 3/4" = 1'-0"

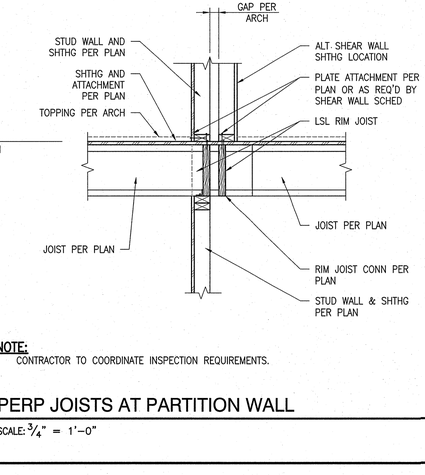

7 PERP JOISTS OVER INTERIOR BEARING WALL

SCALE: 3/4" = 1'-0"

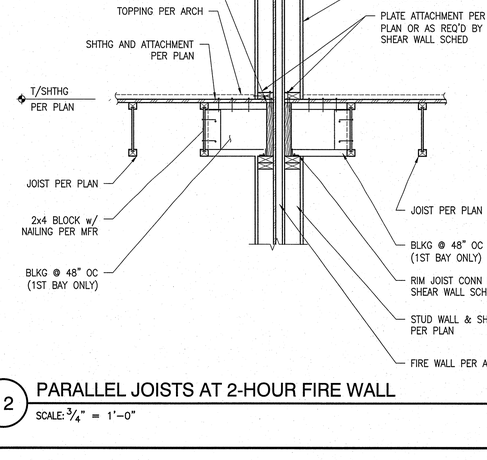

8 PERPENDICULAR JOISTS AT AT EXTERIOR STUD WALL

SCALE: 3/4" = 1'-0"

NOTES:

1. PERP JOISTS ONLY AT SIM

9 FLOOR FRAMING AT CORRIDORS

SCALE: 3/4" = 1'-0"

10 PERP JOISTS AT DECKS

SCALE: 3/4" = 1'-0"

NOTE:
CONTRACTOR TO COORDINATE INSPECTION REQUIREMENTS.

11 PERP JOISTS AT PARTITION WALL

SCALE: 3/4" = 1'-0"

12 PARALLEL JOISTS AT 2-HOUR FIRE WALL

SCALE: 3/4" = 1'-0"

CRAIG A. PENFIELD
STATE OF WASHINGTON
REGISTERED
PROFESSIONAL ENGINEER

REV	DATE	BY	REVISIONS

WHIPPLE CONSULTING ENGINEERS
1908 N. KELLY, SUITE 201
SPOKANE VALLEY, WA 99216
PH: 509-893-2617 FAX: 509-928-0227

CIVIL	X STRUCTURAL	SURVEYING	TRAFFIC	PLANNING	LANDSCAPE	OTHER		

LEGACY VILLAS
12-PLEX

LIBERTY LAKE, WA

DRAWN:	JDK
REVIEWED:	CAP
SCALE:	PER PLAN
PROJ #:	16-1624
DATE:	06/20/16

FLOOR FRAMING DETAILS

S4.1

P:\WCE_WORK\2016 WCE PROJECTS\2016-1624 Wyatt Arch - Copper Basin\Liberty Lake 4ply\DWG\STRUCTURAL\DRAWINGS\SR6_5 PLEX\2016-1624 S3.X Details\Lang, 6/20/2016 8:48:25 AM, jusmith, DWG To PDF.pc3

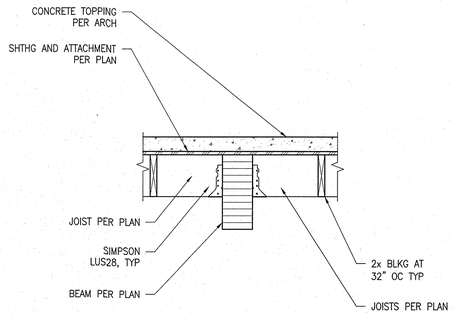

1 NOT USED
SCALE: 3/4" = 1'-0"

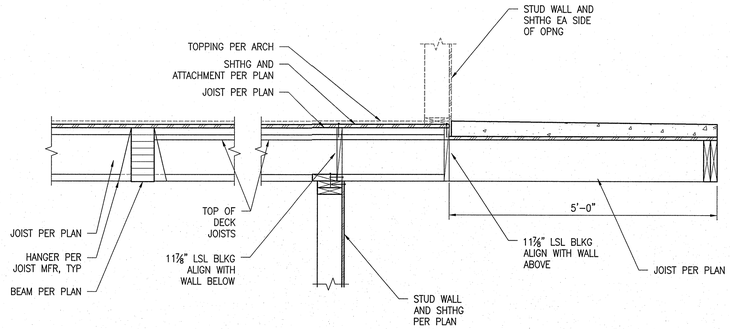

2 FLUSH BEAM AT ENTRY WAY
SCALE: 3/4" = 1'-0"

3 PERP JOISTS AT CANTILEVER DECKS
SCALE: 3/4" = 1'-0"

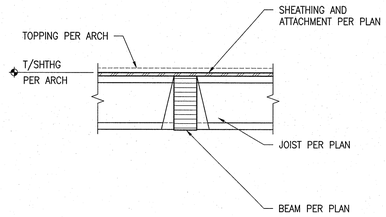

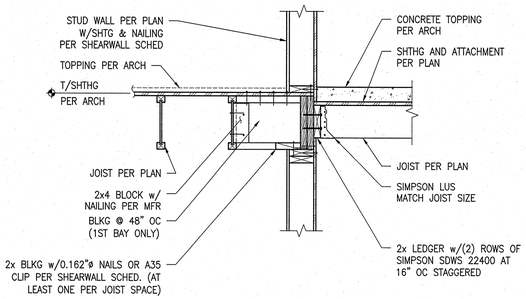

5 NOT USED
SCALE: 3/4" = 1'-0"

6 NOT USED
SCALE: 3/4" = 1'-0"

7 PERP JOISTS AT FLUSH BEAM
SCALE: 3/4" = 1'-0"

8 FLOOR FRAMING AT CORRIDORS
SCALE: 3/4" = 1'-0"

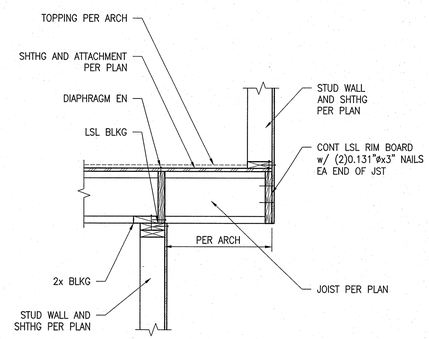

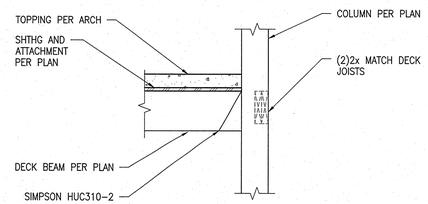

NOTE:
COORDINATE COLUMN WRAPPING WITH ARCHITECT

9 NOT USED
SCALE: 3/4" = 1'-0"

10 NOT USED
SCALE: 3/4" = 1'-0"

11 NOT USED
SCALE: 3/4" = 1'-0"

12 WOOD BEAM CONNECTION TO WOOD POST
SCALE: 3/4" = 1'-0"

CRAIG A. PENFIELD
STATE OF WASHINGTON
22811
REGISTERED
PROFESSIONAL ENGINEER

REV	DATE	BY	REVISIONS

WCE
WHIPPLE CONSULTING ENGINEERS
2528 NORTH SULLIVAN ROAD
SPOKANE VALLEY, WA 99216
PH: 509-893-2617 FAX: 509-926-0227

CIVIL	
X	STRUCTURAL
	SURVEYING
	TRAFFIC
	PLANNING
	LANDSCAPE
	OTHER

LEGACY VILLAS
12-PLEX
LIBERTY LAKE, WA

DRAWN:	JDK
REVIEWED:	CAP
SCALE:	PER PLAN
PROJ #:	16-1624
DATE:	06/20/16

FLOOR FRAMING DETAILS
S4.2

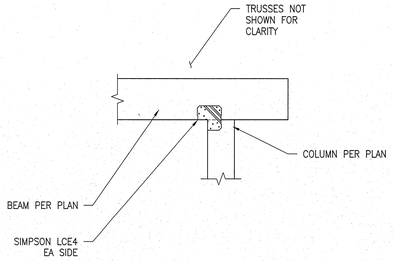

1 BEAM TO COLUMN AT ROOF

SCALE: 3/4" = 1'-0"

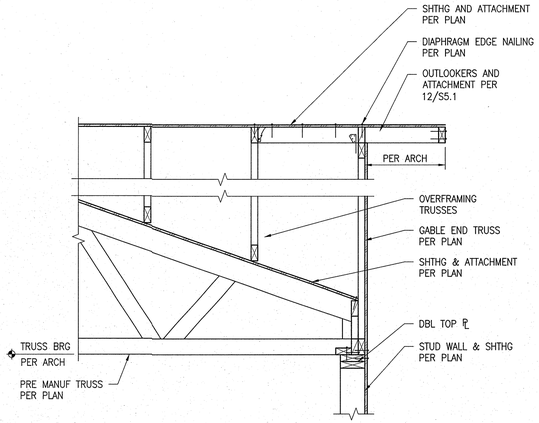

2 PERP TRUSS WITH OVERFRAMING TO EXTERIOR WALL

SCALE: 3/4" = 1'-0"

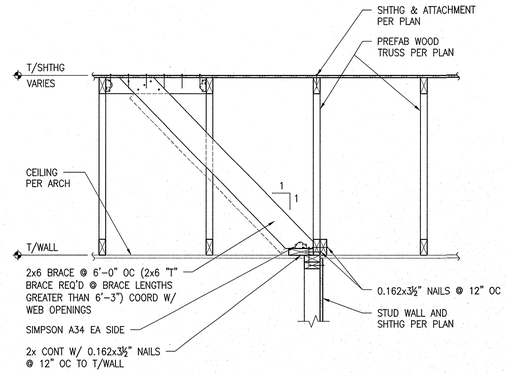

NOTE:
SEE 8/S5.1 FOR BALANCE OF INFORMATION

3 PARALLEL TRUSS TO INTERIOR SHEAR WALL

SCALE: 3/4" = 1'-0"

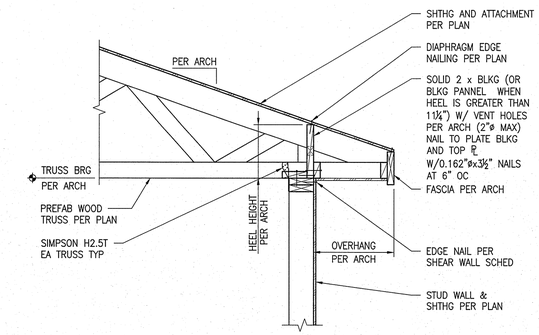

4 PERPENDICULAR TRUSSES TO EXTERIOR WALL

SCALE: 3/4" = 1'-0"

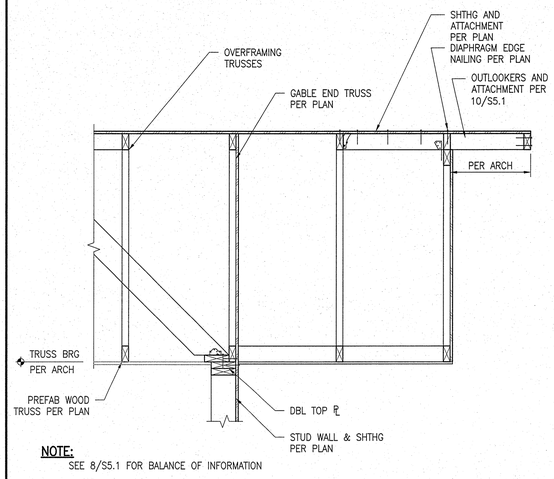

NOTE:
SEE 8/S5.1 FOR BALANCE OF INFORMATION

5 PARALLEL TRUSSES AT ENTRY WAY

SCALE: 3/4" = 1'-0"

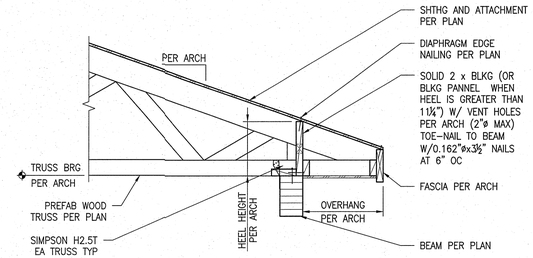

6 PERP TRUSS TO BEAM

SCALE: 3/4" = 1'-0"

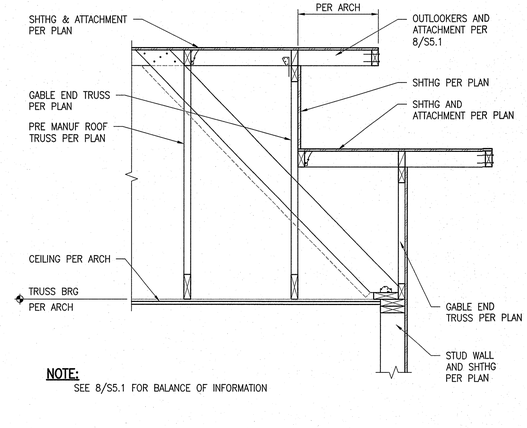

NOTE:
SEE 8/S5.1 FOR BALANCE OF INFORMATION

7 HIGH/LOW GABLE END TRUSS

SCALE: 3/4" = 1'-0"

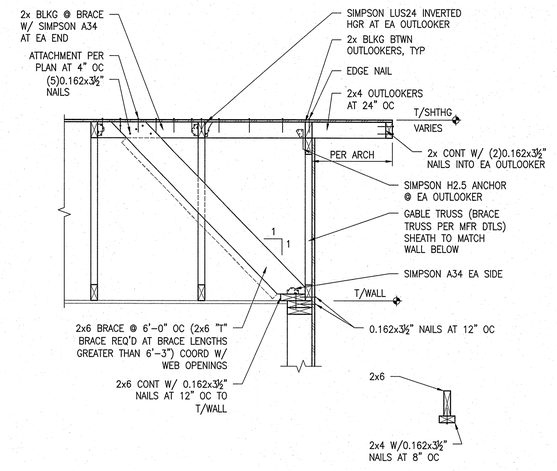

2x6 "T" BRACE

8 GABLE END TRUSS TO EXTERIOR WALL

SCALE: 3/4" = 1'-0"

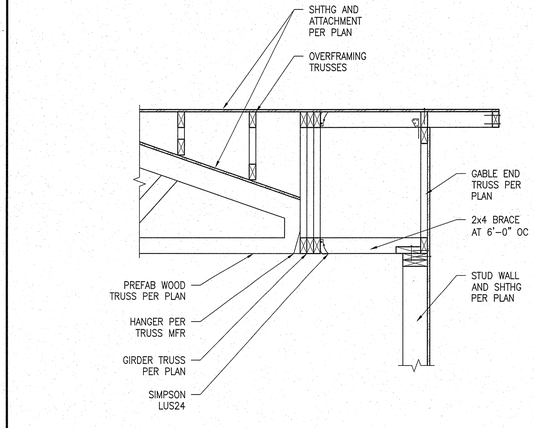

NOTE:
SEE 8/S5.1 FOR BALANCE OF INFORMATION

9 GABLE AND GIRDER TRUSS

SCALE: 3/4" = 1'-0"

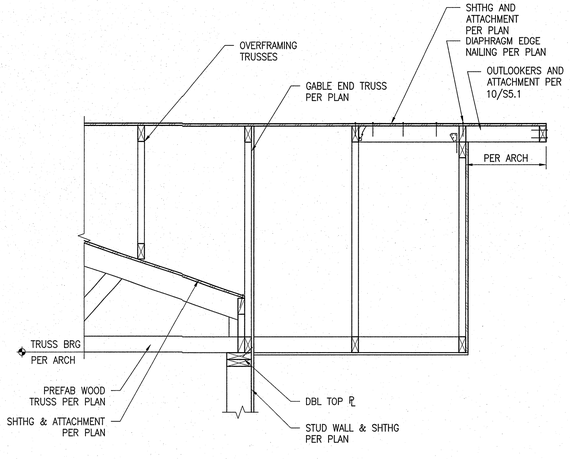

10 ROOF AT PATIO

SCALE: 3/4" = 1'-0"

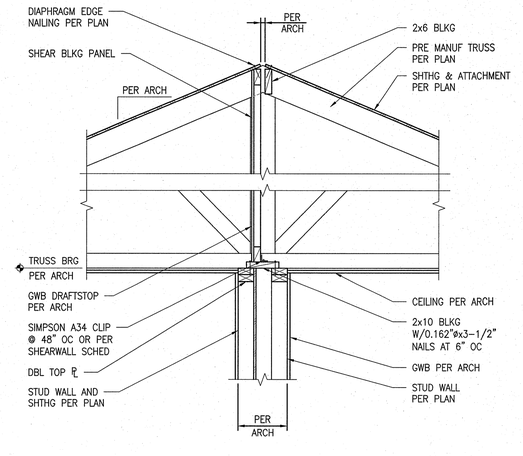

11 PERP TRUSS TO DOUBLE PARTITION WALL

SCALE: 3/4" = 1'-0"

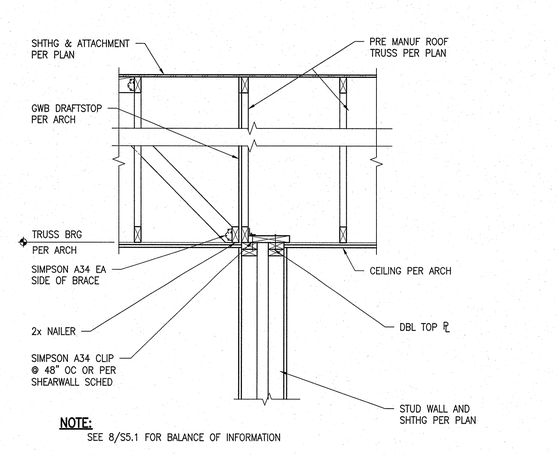

NOTE:
SEE 8/S5.1 FOR BALANCE OF INFORMATION

12 PARALLEL TRUSS TO DOUBLE PARTITION WALL

SCALE: 3/4" = 1'-0"

CRAIG A. PENFIELD — STATE OF WASHINGTON — 42811 — REGISTERED PROFESSIONAL ENGINEER

REVISIONS | BY | DATE | REV

WCE
WHIPPLE CONSULTING ENGINEERS
721 W. SPOKANE FALLS BLVD.
SPOKANE VALLEY, WA 99216
PH: 509-893-2617 FAX: 509-928-0227

CIVIL | X STRUCTURAL | SURVEYING | TRAFFIC | PLANNING | LANDSCAPE | OTHER

LEGACY VILLAS
12-PLEX

LIBERTY LAKE, WA

DRAWN:	JDK
REVIEWED:	CAP
SCALE:	PER PLAN
PROJ #:	16-1624
DATE:	06/20/16

ROOF FRAMING DETAILS

S5.1

J:\WCE_WORK\2016 WCE PROJECTS\2016-1624 Wyatt Arch - Copper Basin Liberty Lake Apt\DWG\STRUCTURAL\DRAWINGS\DBL 8 FEB\2016-1624 S3.X Details3.dwg, 6/20/2016 8:48:53 AM, jarrett, DWG To PDF.pc3

Whipple Consulting Engineers, Inc.

Structural Calculations

Legacy Villas
12-Plex
Liberty Lake, WA

Prepared for:
Wyatt Architects
P.O. Box 141713
Spokane Valley, WA 99214

June 20, 2016
WCE Job #2016-1624

2528 N. Sullivan Road, Spokane Valley, WA 99216 ▲ PO Box 1566, Veradale, WA 99037
Phone 509-893-2617 • Fax 509-926-0227
Civil, Structural, Traffic, Survey, Landscape Architecture and Entitlements

Whipple Consulting Engineers
2528 North Sullivan, Spokane Valley, WA 99216
509-893-2617 www.whipplece.com

GRAVITY LOADS

ROOF DEAD LOADS	WEIGHT (PSF)	ROOF LIVE LOADS	WEIGHT (PSF)
Roofing	3	Roof Live Construction	20
Sheathing/Metal Deck	1.0		
Insulation	1.5	Snow Loads	40
Trusses/Framing	3.0		
Ceiling	1.0		
MEP	3.0		
Miscellaneous	2.5	WALL DEAD LOAD	
Total Roof Dead Load	15.0	2x6	10

FLOOR DEAD LOADS		FLOOR LIVE LOADS	
Floor	25.0	Floor	40
Corridor/Decks	50	Corridor/Decks	100
Cantilevered Decks	15		

LATERAL LOADS

Wind

Wind Speed	110	MPH
Exposure	C	
Importance Category	II	

Seismic

Seismic Importance Factor	1.0		
Seismic Use Group	II		
Site Class	C		
Spectral Response Coeff (S_{DS})	0.274	g	
Spectral Response Coeff (S_{D1})	0.129	g	
Seismic Design Category	B		
Response Modification Factor (R)	6.5		Light Framed Wood Shear Walls
Seismic Response Coeff (C_S)	0.0421		

LATERAL DESIGN

Seismic

Lat. = 47.666°N , Long. = 117.113W

Category II , Soil Site Class "C" (per soils report)

Dead Loads, W

W_{Roof} = (Self wt. + 20% S.L)(Area)

Self wt = 15psf

20% SL = 0.20(40psf) = 8psf

Area = 93'x58' = 5400 ft²

W_{Roof} = 124.2 k

W_{Floor} = DL x A

= 25psf x 5400 ft²

W_{Floor} = 135.0 k

Base Shear, V

V = 10.92k see attached Enercalc run

WCE Whipple Consulting Engineers, Inc. 2528 N. Sullivan Rd. • Spokane Valley, WA 99216 Phone 509-893-2617 • Fax 509-926-0227	Traffic ☐ Planning ☐ Survey ☐ Structural ☐ Landscape ☐ Civil ☐	NAME OF PROJECT Legacy Villas - 12 Plex			SHEET NUMBER OF
		COMPUTED BY DGR	CHECKED BY	JOB NUMBER 16-1624	DATE 6/9/16

ASCE 7-10 Wind Forces Chpt 28, Pt2 & Chpt 30, Pt2

Lic. # : KW-06009199 — Licensee : Whipple Consulting Engineers

Description : 12-Plex

Analytical Values

Calculations per ASCE 7-10

V : Basic Wind Speed per Sect 26.5-1 A, B or C	110.0 mph	
Roof Rise:Run Ratio	6:12	
Occupancy per Table 1.5-1	II	All Buildings and other structures except those listed as Category I, III, and IV
Exposure Category per 26.7	Exposure C	
MRH : Mean Roof Height	26.0 ft	*"Lambda" is interpolated between height tablular values.*
Lambda : per Figure 28.6-1, Page 305	1.36	
Effective Wind Area of Component & Cladding	10.0 ft^2	
Roof pitch for cladding pressure	0 to 7 degrees	
User specified minimum design pressure	8.0 psf	
Topographic Factor Kzt per 26.8	1.00	
LHD : Least Horizontal Dimension	58.0 ft	
a = max (0.04 * LHD, 3, min(0.10 * LHD, 0.4*MRH))	5.80 ft	max (0.04 * LHD, 3, min(0.10 * LHD, 0.4*MRH))

Design Wind Pressures

Minimum Additional Load Case per 28.4.4 = 16 PSF on entire vertical plane

Horizontal Pressures . . .

Load Case # 1 . . .			
Zone: A =	32.78 psf	Zone: C =	23.66 psf
Zone: B =	8.00 psf	Zone: D =	8.00 psf
Load Case # 2 . . .			
Zone: A =	8.00 psf	Zone: C =	8.00 psf
Zone: B =	8.00 psf	Zone: D =	8.00 psf

Vertical Pressures . . .

Load Case # 1 . . .			
Zone: E =	-14.55 psf	Zone: G =	-10.47 psf
Zone: F =	-19.86 psf	Zone: H =	-15.91 psf
Load Case # 2 . . .			
Zone: E =	-8.00 psf	Zone: G =	-8.00 psf
Zone: F =	-10.74 psf	Zone: H =	-8.00 psf

Overhangs . . .

Load Case # 1 . . .			
Zone: Eoh =	-27.06 psf	Zone: Goh =	-23.12 psf
Load Case # 2 . . .			
Zone: Eoh =	8.00 psf	Zone: Goh =	8.00 psf

Main Wind Force Resisting System – Method 2		h ≤ 60 ft.
Figure 28.6-1	Design Wind Pressures	**Walls & Roofs**
Enclosed Buildings		

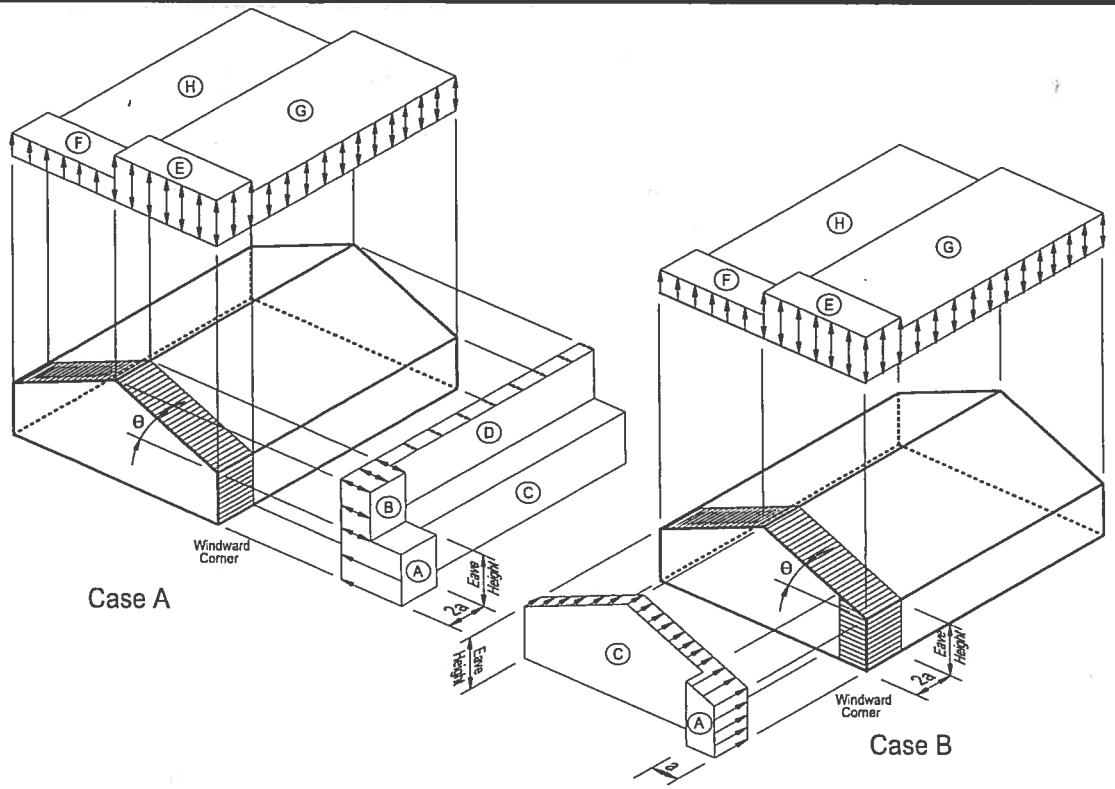

Notes:

1. Pressures shown are applied to the horizontal and vertical projections, for exposure B, at h=30 ft (9.1m). Adjust to other exposures and heights with adjustment factor λ.
2. The load patterns shown shall be applied to each corner of the building in turn as the reference corner. (See Figure 28.4-1)
3. For Case B use $\theta = 0°$.
4. Load cases 1 and 2 must be checked for $25° < \theta \leq 45°$. Load case 2 at 25° is provided only for interpolation between 25° and 30°.
5. Plus and minus signs signify pressures acting toward and away from the projected surfaces, respectively.
6. For roof slopes other than those shown, linear interpolation is permitted.
7. The total horizontal load shall not be less than that determined by assuming $p_S = 0$ in zones B & D.
8. Where zone E or G falls on a roof overhang on the windward side of the building, use E_{OH} and G_{OH} for the pressure on the horizontal projection of the overhang. Overhangs on the leeward and side edges shall have the basic zone pressure applied.
9. Notation:
   - *a:* 10 percent of least horizontal dimension or 0.4h, whichever is smaller, but not less than either 4% of least horizontal dimension or 3 ft (0.9 m).
   - *h:* Mean roof height, in feet (meters), except that eave height shall be used for roof angles <10°.
   - *θ:* Angle of plane of roof from horizontal, in degrees.

Wind V = 110 mph, Exp. "C", Zone (risk) II, Encl. Cat = Enclosed
Code: 2012 IBC, ASCE 7-10

Wind pressures per ASCE 7-10, Fig 28.6-1 (See Attached Enercalc run)
A = 32.78, B = 8.0 psf, C = 23.66 psf, D = 8.0 psf
dim "a" = 5.8'

Wind into Sidewall, L = 82'

$V_{Flr.}$ = Wall trib ht. [2a(A) + (L - 2a)C] / L
= 10' [11.6'(32.78 psf) + (82 - 11.6')23.66 psf] / 82'
V_{Flr} = 250 plf

V_{eave} = [Wall trib ht. [2a(A) + (L-2a)(C)] + Roof trib ht. [2a(B) + (L-2a)(D)]] / L
= [5' [11.6'(32.78 psf) + (70.4')(23.66 psf)] + 14.5' [11.6(8 psf) + (70.4') 8 psf]] / 82'
V_{eave} = 241 plf

Wind into Endwall, W = 58'

V_{Flr} = Wall trib. ht. [a(A) + (W - a)C] / W
= 10' [5.8'(32.78 psf) + (52.2) 23.66 psf] / 58'
V_{Flr} = 246 plf

V_{eave} = [Wall trib. ht. [a(A) + (W-a)C] + Roof trib ht [a(A) + (W-a)C]] / W
= [5' [5.8'(32.78 psf) + 52.2'(23.66)] + 10' [5.8'(32.78 psf) + 52.2'(23.66 psf)]] / 58'
V_{eave} = 369 plf

Wind Base Shear

Wind into Sidewall
V = $(V_{Flr} + V_{eave})$ L = (250 plf + 241 plf) 82' = 40.2 K

Wind into Endwall
V = $(V_{Flr} + V_{eave})$ W = (246 plf + 369 plf) 58' = 35.7 K

* Wind governs over Seismic both directions

WCE Whipple Consulting Engineers, Inc. 2528 N. Sullivan Rd. • Spokane Valley, WA 99216 Phone 509-893-2617 • Fax 509-926-0227	Traffic ☐ Planning ☐ Survey ☐ Structural ☐ Landscape ☐ Civil ☐	NAME OF PROJECT Legacy Villas - 12 Plex			SHEET NUMBER OF
		COMPUTED BY DGR	CHECKED BY	JOB NUMBER 16-1624	DATE

Wind Shearlines – First Floor

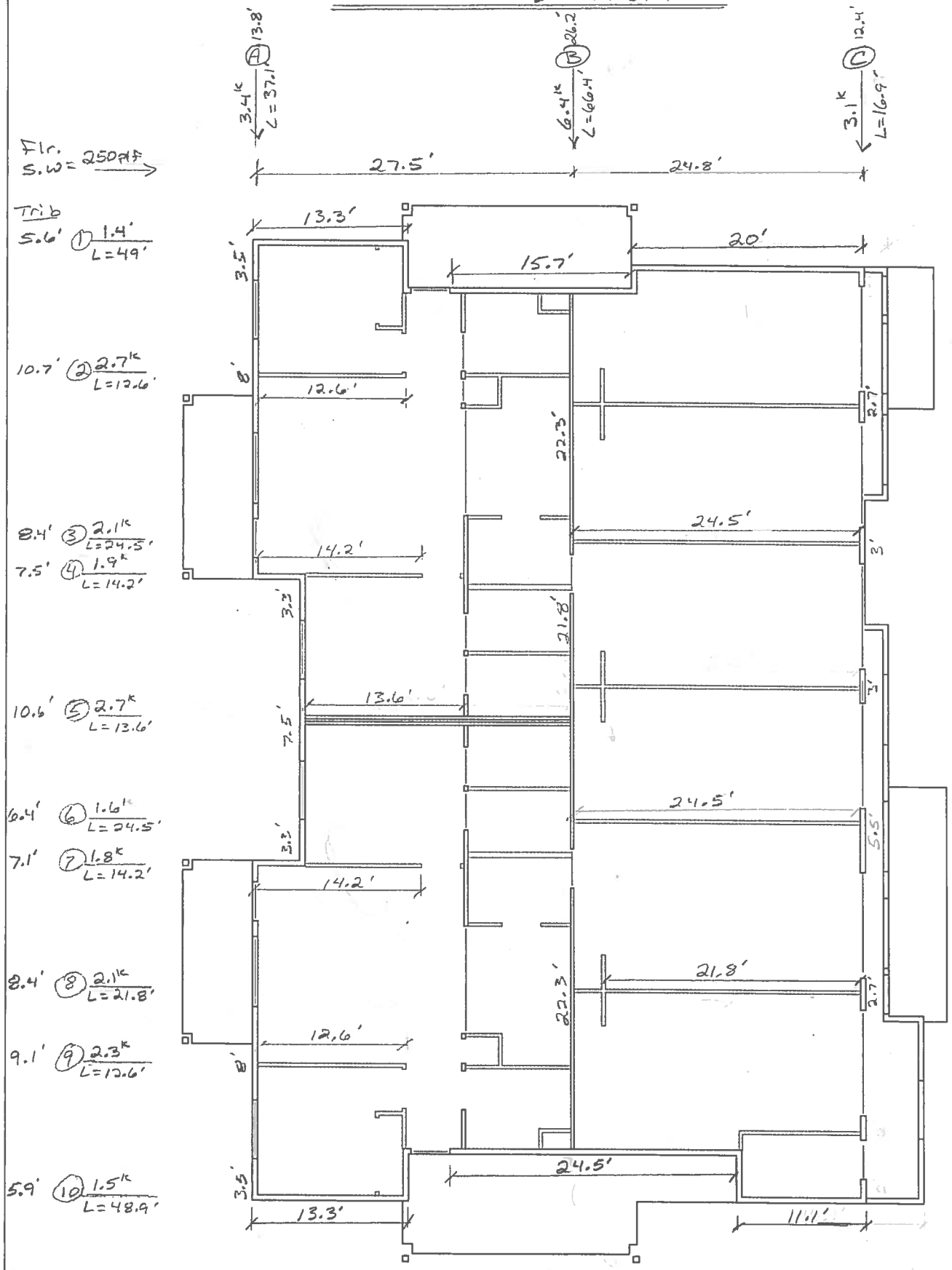

Wind Shearlines – 2nd Floor

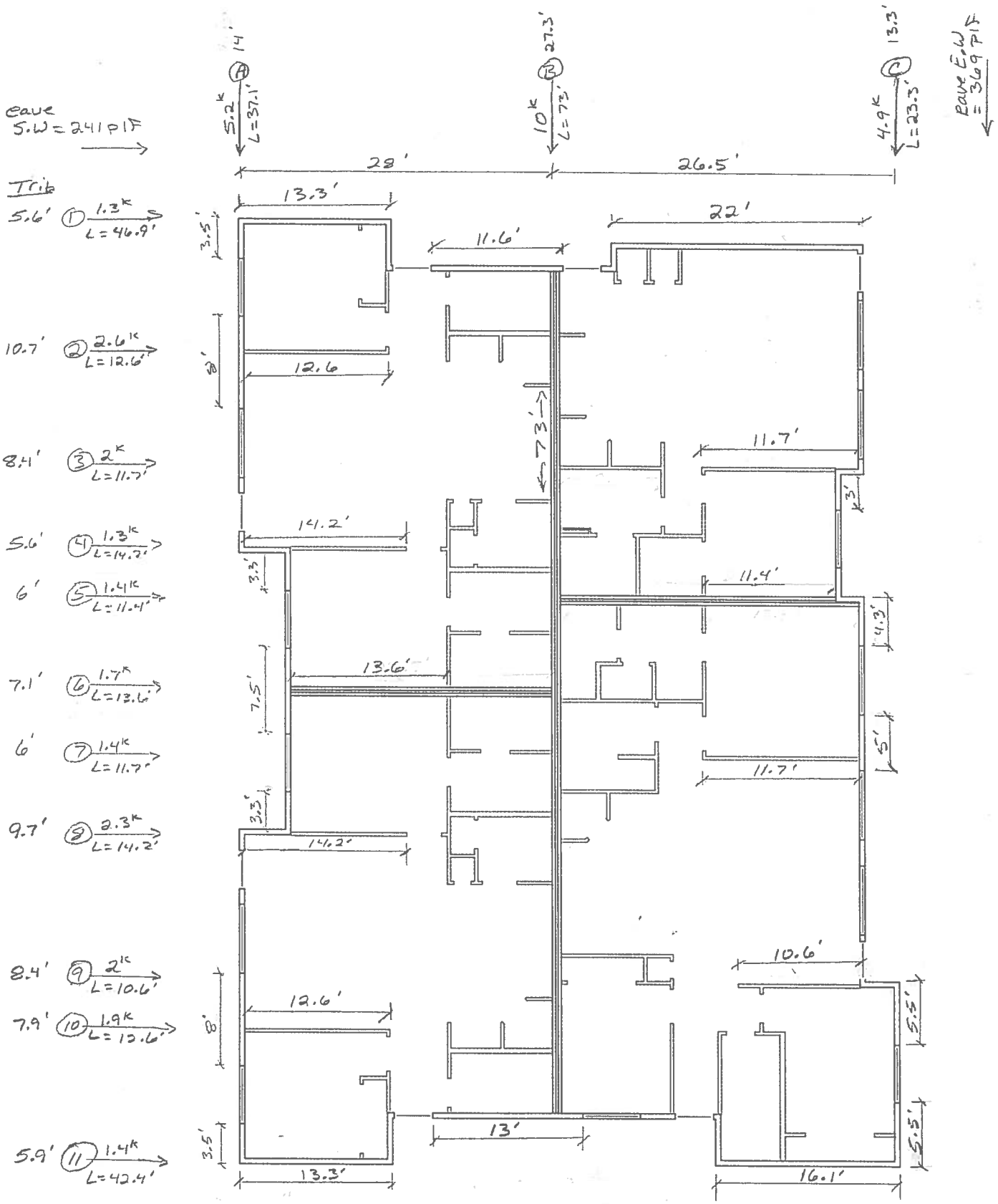

Whipple Consulting Engineers
2528 N Sullivan Rd, Spokane Valley, WA

Date: 06/10/16
Page:
By: DGR

Project: Legacy Villas
Subject: LATERAL ANALYSIS - 6-Plex

Project No: 16-1624

Shear Wall Calculations (Wind Into Sidewall)
Wind Controls

TOP OF 2nd FLOOR WALLS

Wall	Load (plf)	Trib Width (ft)	Load (k)	Load From Above (k)	Total Load for Design (k)	Total Wall Length (ft)	(0.6)*Unit Shear (plf)	Wall Type	Wall Capacity
1E	241.0	5.6	1.35	0.00	1.35	46.9	17	P6	260
2E	241.0	10.7	2.58	0.00	2.58	10.7	145	P6	260
3E	241.0	8.4	2.02	0.00	2.02	8.4	145	P6	260
4E	241.0	5.6	1.35	0.00	1.35	14.2	57	P6	260
5E	241.0	6.0	1.45	0.00	1.45	11.4	76	P6	260
6E	241.0	7.1	1.71	0.00	1.71	13.6	75	P6	260
7E	241.0	6.0	1.45	0.00	1.45	11.7	74	P6	260
8E	241.0	9.7	2.34	0.00	2.34	24	14	P6	260
9E	241.0	8.4	2.02	0.00	2.02	10.6	115	P6	260
10E	241.0	7.9	1.90	0.00	1.90	12.6	91	P6	260
11E	241.0	5.9	1.42	0.00	1.42	42.4	20	P6	260

TOP OF 1st FLOOR WALLS

Wall	Load (plf)	Trib Width (ft)	Load (k)	Load From Above (k)	Total Load for Design (k)	Total Wall Length (ft)	(0.6)*Unit Shear (plf)	Wall Type	Wall Capacity
1F	250.0	5.6	1.40	1.35	2.75	49	34	P6	260
2F	250.0	10.7	2.68	3.19	5.87	12.6	279	P4	380
3F	250.0	8.4	2.10	1.41	3.51	24.5	86	P6	260
4F	250.0	7.5	1.88	2.35	4.23	14.2	179	P6	260
5F	250.0	10.6	2.65	2.56	5.21	13.6	230	P6	260
6F	250.0	6.4	1.60	2.65	4.25	24.5	104	P6	260
7F	250.0	7.1	1.78	2.34	4.12	14.2	174	P6	260
8F	250.0	8.4	2.10	1.41	3.51	21.8	97	P6	260
9F	250.0	9.1	2.28	2.51	4.79	12.6	228	P6	260
10F	250.0	5.9	1.48	1.42	2.90	48.9	36	P6	260

Shear Wall Calculations (Wind Into End Wall)
Wind Controls

TOP OF 2nd FLOOR WALLS

Wall	Load (plf)	Trib Width (ft)	Load (k)	Load From Above (k)	Total Load for Design (k)	Total Wall Length (ft)	(0.6)*Unit Shear (plf)	Wall Type	Wall Capacity
Line A	369	14	5.17	0.00	5.17	37.1	84	P6	260
Line B	369	27.3	10.07	0.00	10.07	73	83	P6	260
Line C	369	13.3	4.91	0.00	4.91	23.3	126	P6	260
					20.15				

TOP OF 1st FLOOR WALLS

Wall	Load (plf)	Trib Width (ft)	Load (k)	Load From Above (k)	Total Load for Design (k)	Total Wall Length (ft)	(0.6)*Unit Shear (plf)	Wall Type	Wall Capacity
Line A	246	13.8	3.39	5.17	8.56	37.1	138	P6	260
Line B	246	26.2	6.45	10.07	16.52	66.4	149	P6	260
Line C	246	12.4	3.05	4.91	7.96	16.9	283	P4	380
					33.04				

Shear Wall Holdowns (Wind Into Sidewall)

2ND FLOOR (HD ACROSS 2ND FLOOR FRAMING)

Wall	Unit Shear	Wall Length	Wall Height	Dead Load 0.6D (plf)	PDL 0.6*D (lb)	Overturning Moment	Holdown Force	Anchor Type	Anchor Capacity
1E	17	11.6	9	90		-4.25	-367	None	
2E	145	12.6	9	150	0	4.49	356	None	
3E	145	11.7	9	150		4.96	424	None	
4E	57	14.2	9	150	0	-7.84	-552	None	
5E	76	11.4	9	150	0	-1.94	-170	None	
6E	75	13.6	9	150	0	-4.63	-341	None	
7E	74	11.7	9	150	0	-2.46	-210	None	
8E	14	14.2	9	150	0	-13.31	-937	None	
9E	115	10.6	9	150	0	2.50	236	None	
10E	91	12.6	9	150	0	-1.63	-129	None	
11E	20	13	9	90	0	-5.25	-404	None	

1ST FLOOR (HD AT FOUNDATION)

Wall	Unit Shear	Wall Length	Wall Height	Dead Load 0.6D (plf)	PDL 0.6*D (lb)	Overturning Moment	Holdown Force	Anchor Type	Anchor Capacity
1F	34	13.3	9	200		-13.66	-1027	None	
2F	279	12.6	9	375	0	1.90	507	None	
3F	86	25.4	9	375		-101.32	-3565	None	
4F	179	14.2	9	375	0	-14.99	-1056	None	
5F	230	13.6	9	375	0	-6.55	-481	None	
6F	104	24.5	9	375	0	-89.60	-3657	None	
7F	174	14.2	9	375	0	-15.59	-1098	None	
8F	97	21.8	9	375	0	-70.15	-3218	None	
9F	228	12.6	9	375	0	-3.93	-75	None	
10F	36	11.1	9	200	0	-8.77	-790	None	

Shear Wall Holdowns (Wind Into Endwall)

2ND FLOOR (HD ACROSS 2ND FLOOR FRAMING)

Wall	Unit Shear	Wall Length	Wall Height	Dead Load 0.6D (plf)	PDL 0.6*D (lb)	Overturning Moment	Holdown Force	Anchor Type	Anchor Capacity
Line A	84	3.5	9	500	0	-0.43	-123	None	
Line B	83	73	9	1000	0	-2610.10	-35755	None	
Line C	126	4.3	9	500	0	0.27	62	None	

1ST FLOOR (HD AT FOUNDATION)

Wall	Unit Shear	Wall Length	Wall Height	Dead Load 0.6D (plf)	PDL 0.6*D (lb)	Overturning Moment	Holdown Force	Anchor Type	Anchor Capacity
Line A	138	3.5	9	500	0	1.30	371	None	
Line B	149	21.8	9	1000	0	-208.33	-9557	None	
Line C	283	2.7	9	500	1500	0.99	368	None	

BEAMS AND HEADERS

12-Plex E-BEAM KEY

ROOF

B401 (TYP DECK SIDE BEAM)

L = 5'-6"
TRIB = 9'-4"

DL = 16 PSF
SL = 40 PSF

∴ (2) 2x10

END REACTIONS
DL = 400#
SL = 1030#

B402 (SIDE ENTRY WAYS)

L = 8'-8"
TRIB = 18'-10" 0'-0" → 4'-8"
14'-0" 4'-8" - 8'-8"

D = 16 PSF
SL = 40 PSF

∴ GL 5 1/8 x 9

END REACTIONS
DL = 1.20 K
SL = 3.09 K

B403 (COMMON ENTRY WAY)

L = 12'-10"
TRIB = 22'-4"

DL = 16 PSF
SL = 40 PSF

∴ GL 5 1/8 x 12

END REACTIONS
DL = 2.23 K
SL = 5.73 K

HEADERS (DESIGN FOR WORSE CASE)

H401 L = 6'-0"
TRIB = 13'-0"

DL = 16 PSF
SL = 40 PSF

∴ (2) 2x10

2ND FLOOR

B301 (DECK FACE BEAM)

L = 14'-8"
TRIB = 3'-0"

DL = 50 PSF
LL = 40 PSF

∴ GL 5 1/8 x 9

END REACTIONS
DL = 1.17 K
LL = 0.88 K

B302 (SIDE ENTRY WAY FACE BEAM)

L = 19'-2"
TRIB = 4'-7"

DL = 50 PSF
LL = 100 PSF

∴ GL 5 1/8 x 16 1/2

DL = 9.37 K
LL = 11.89 K

B303 (STAIR STRINGER)

L = 15'-9"
TRIB = 1'-9"

DL = 50 PSF
LL = 100 PSF

∴ GL 3 1/8 x 12
AC/AC 20F-V12

DL = 0.75 K
LL = 1.38 K

B304 (SIDE ENTRY WAYS - STAIR HANGER)

L = 8'-8"
TRIB = 5'-0"

DL = 50 PSF
LL = 100 PSF

PL @ 4'-4" + 7'-10"

DL = 0.75 K
LL = 1.38 K

∴ GL 5 1/8 x 12

DL = 2.19 K
LL = 4.10 K

WCE Whipple Consulting Engineers, Inc.
2528 N. Sullivan Rd. • Spokane Valley, WA 99216
Phone 509-893-2617 • Fax 509-926-0227

Traffic ☐
Planning ☐
Survey ☐
Structural ☑
Landscape ☐
Civil ☐

NAME OF PROJECT			SHEET NUMBER
LEGACY VILLAS			OF
COMPUTED BY	CHECKED BY	JOB NUMBER	DATE
JDK	CAP	16-1624	6-13-16

6 PLEX - BEAM KEY CONT

B305 (COMMON ENTRY WAY MID SPAN)

L = 16'-10"

TRIB = 9'-7"

DL = 50 PSF
LL = 100 PSF

∴ GL 6¾ x 16'½
DL 4.83ᵏ
LL 8.06ᵏ

B306 (COMMON ENTRY WAY FACE BEAM - CONT)

L = 12'-10" 4'-8" 3'-6" 4'-8"

TRIB = 5'-0"

DL = 50 PSF
LL = 100 PSF

∴ GL 5½ x 12
24F
V8

B307 (COMMON ENTRY WAY - NO COL)

L = 8'-10"
TRIB = 5'-0"

DL = 50 PSF
LL = 100 PSF

∴ GL 6½ x 9
DL = 1.15ᵏ
LL = 2.21ᵏ

B308 (LIVING ROOM BEAM)

L = 9'-9"

TRIB = 13'-5"

JOIST CONT OVER

DL = 25 PSF + 20% 6 PSF
LL = 40 PSF 8 PSF

∴ GL 5½ x 9
DL = 1.89ᵏ
LL = 2.95ᵏ

HEADER

H301 (TYPICAL EXTERIOR HEADER)

L = 5'-0"

TRIB = 8'-9"

DL = 25 PSF
LL = 40 PSF

∴ (2) 2x10

H302 (HEADER AT DECK)

L = 6'-0"

TRIB = 3'

DL = 50 PSF
LL = 40 PSF

∴ (3) 2x10

TRIB = 8'-9"

DL = 25 PSF
LL = 40 PSF

H303 (TYPICAL INTERIOR HEADER)

L = 3'-4"

TRIB = 13'-6"

DL = 25 PSF
LL = 40 PSF

∴ (2) 2x8

ROOF → H402 (SIDE ENTRY WAY w/ PL)

L = 5'-0"

TRIB = 2'-0" 15, 40

PL AT 3' DL 1.89ᵏ/ft

∴ (3) 2x10

WCE Whipple Consulting Engineers, Inc.
2528 N. Sullivan Rd. • Spokane Valley, WA 99216
Phone 509-893-2617 • Fax 509-926-0227

Traffic ☐ Planning ☐ Survey ☐ Structural ☑ Landscape ☐ Civil ☐

NAME OF PROJECT			SHEET NUMBER
LEGACY VILLAS			OF
COMPUTED BY	CHECKED BY	JOB NUMBER	DATE
JDK	CAP	16-1624	6-13-16

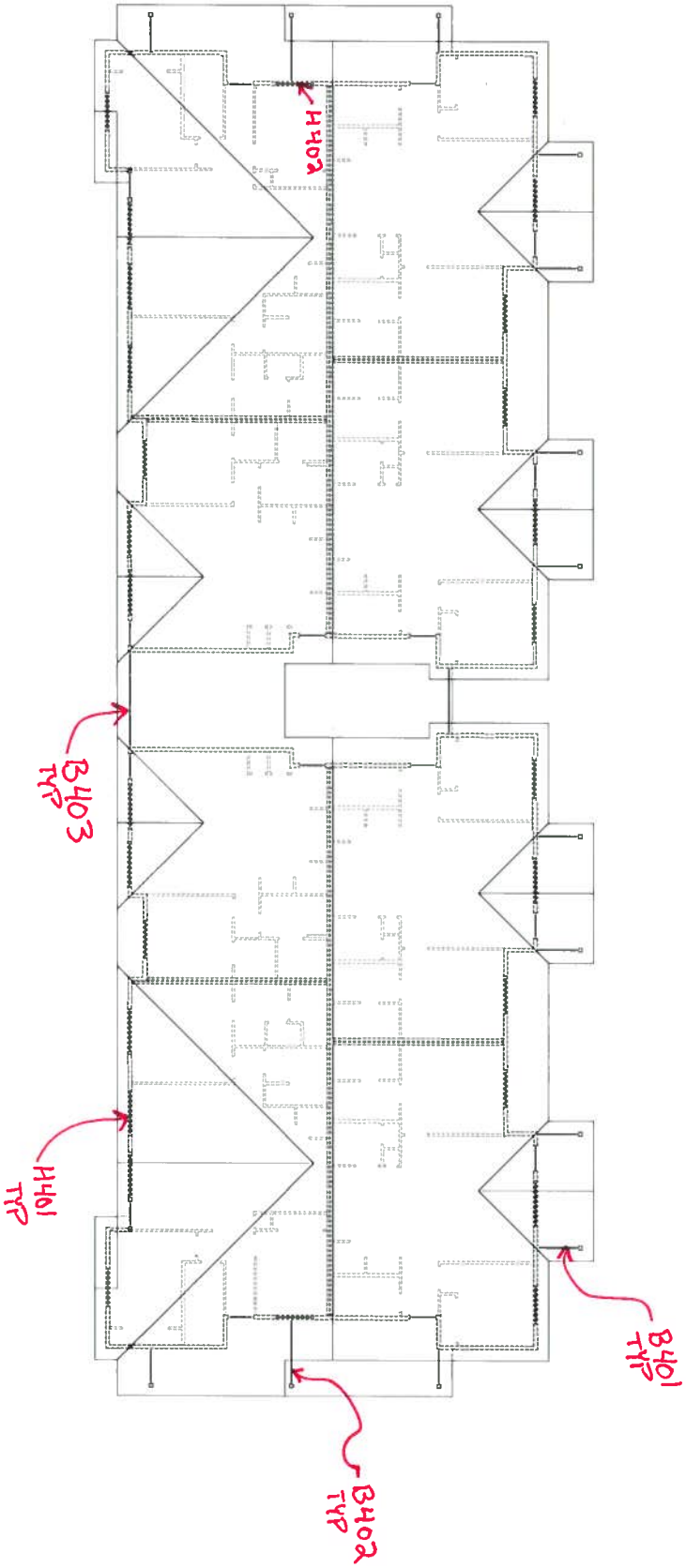

Beam & Header Key

ROOF

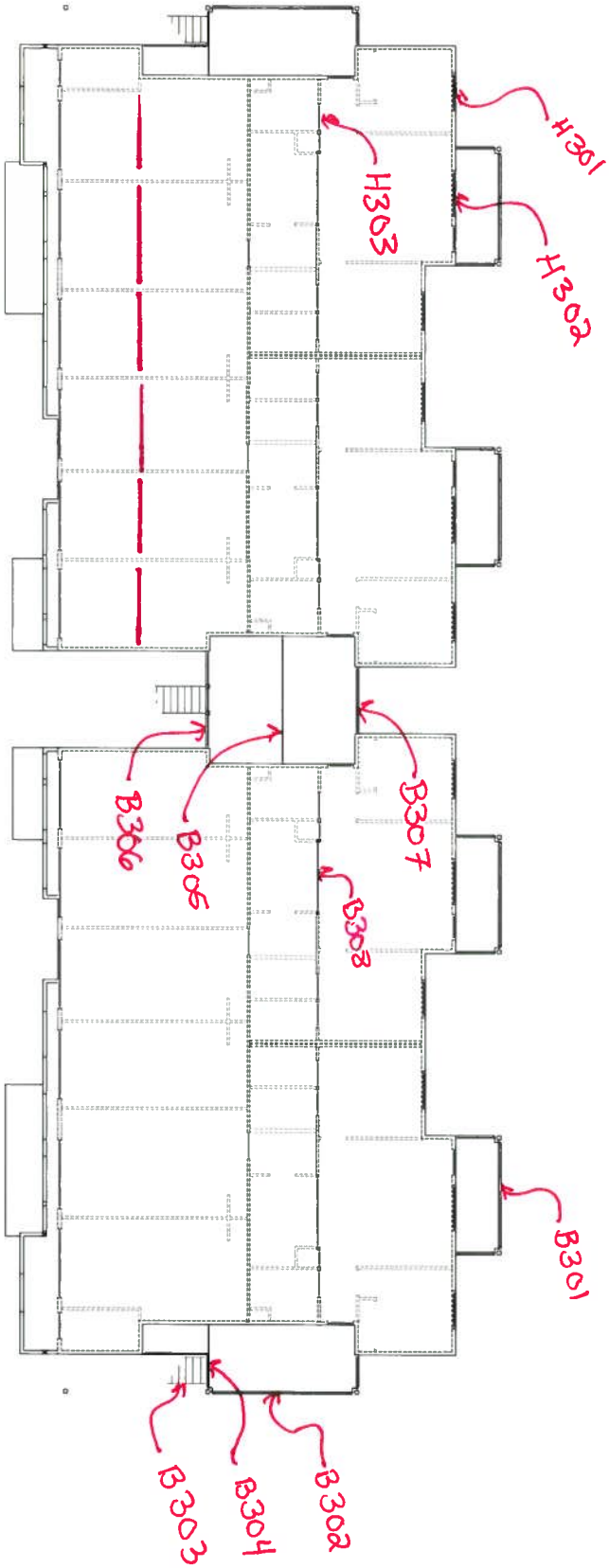

Beam + Header Key

2ND FLOOR

Whipple Consulting Engineers
2528 N Sullivan Rd
Spokane Valley, WA 99216

Project Title:
Engineer:
Project Descr:
Project ID:

Multiple Simple Beam

File = P:\WCE_WORK\242IDK~9\2MHZA9~D\DBJGBY~H\SEV10W~K\C7A4YC~F\1CFED0~A.EC6
ENERCALC, INC. 1983-2016, Build:6.16.6.7, Ver:6.16.6.7
Lic. # : KW-06009199
Licensee : Whipple Consulting Engineers

Description : Roof Beams

Wood Beam Design : B401 (Typical Deck Side Beam)

Calculations per NDS 2012, IBC 2012, CBC 2013, ASCE 7-10

BEAM Size : **2-2x10, Sawn, Fully Unbraced**
Using Allowable Stress Design with IBC 2012 Load Combinations, Major Axis Bending

Wood Species :	Douglas Fir - Larch					Wood Grade :	No.2		
Fb - Tension	900 psi	Fc - Prll	1350 psi	Fv	180 psi	Ebend- xx	1600 ksi	Density	31.2 pcf
Fb - Compr	900 psi	Fc - Perp	625 psi	Ft	575 psi	Eminbend - xx	580 ksi		

Applied Loads

Beam self weight calculated and added to loads
Unif Load: D = 0.0150, S = 0.040 k/ft, Trib= 9.330 ft

Design Summary

Max fb/Fb Ratio = **0.487** : 1
fb : Actual : 550.64 psi at 2.750 ft in Span # 1
Fb : Allowable : 1,131.49 psi
Load Comb : +D+S+H

Max fv/FvRatio = **0.268** : 1
fv : Actual : 55.56 psi at 0.000 ft in Span # 1
Fv : Allowable : 207.00 psi
Load Comb : +D+S+H

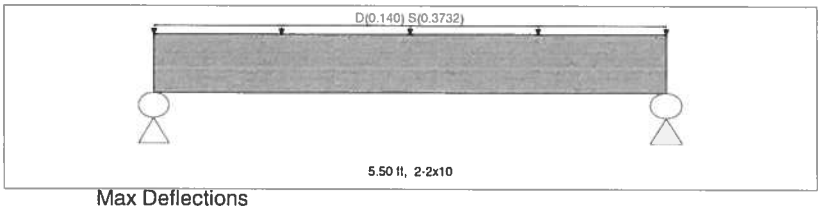

Max Reactions (k)	D	L	Lr	S	W	E	H
Left Support	0.40			1.03			
Right Support	0.40			1.03			

Max Deflections

Downward L+Lr+S	0.024 in	Downward Total	0.034 in
Upward L+Lr+S	0.000 in	Upward Total	0.000 in
Live Load Defl Ratio	2704 >360	Total Defl Ratio	1944 >240

Wood Beam Design : B402 (Side Entry Ways)

Calculations per NDS 2012, IBC 2012, CBC 2013, ASCE 7-10

BEAM Size : **5.125x9, GLB, Fully Unbraced**
Using Allowable Stress Design with IBC 2012 Load Combinations, Major Axis Bending

Wood Species :	DF/DF					Wood Grade :	24F - V4		
Fb - Tension	2400 psi	Fc - Prll	1650 psi	Fv	265 psi	Ebend- xx	1800 ksi	Density	31.2 pcf
Fb - Compr	1850 psi	Fc - Perp	650 psi	Ft	1100 psi	Eminbend - xx	950 ksi		

Applied Loads

Beam self weight calculated and added to loads
Unif Load: D = 0.0150, S = 0.040 k/ft, 0.0 ft to 4.670 ft, Trib= 18.830 ft
Unif Load: D = 0.0150, S = 0.040 k/ft, 4.670 to 8.670 ft, Trib= 14.0 ft

Design Summary

Max fb/Fb Ratio = **0.555** : 1
fb : Actual : 1,524.75 psi at 4.104 ft in Span # 1
Fb : Allowable : 2,745.43 psi
Load Comb : +D+S+H

Max fv/FvRatio = **0.377** : 1
fv : Actual : 114.87 psi at 0.000 ft in Span # 1
Fv : Allowable : 304.75 psi
Load Comb : +D+S+H

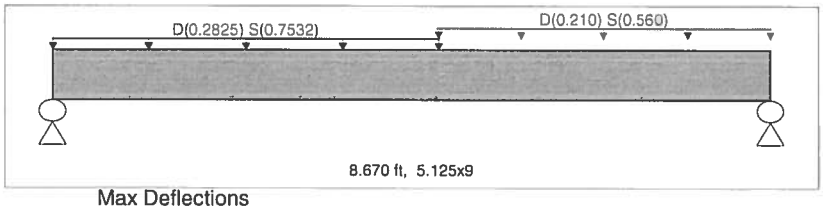

Max Reactions (k)	D	L	Lr	S	W	E	H
Left Support	1.20			3.09			
Right Support	1.04			2.67			

Max Deflections

Downward L+Lr+S	0.153 in	Downward Total	0.212 in
Upward L+Lr+S	0.000 in	Upward Total	0.000 in
Live Load Defl Ratio	682 >360	Total Defl Ratio	490 >240

Wood Beam Design : B403 (Common Entry Way)

Calculations per NDS 2012, IBC 2012, CBC 2013, ASCE 7-10

BEAM Size : **5.125x12, GLB, Fully Unbraced**
Using Allowable Stress Design with IBC 2012 Load Combinations, Major Axis Bending

Wood Species :	DF/DF					Wood Grade :	24F - V4		
Fb - Tension	2400 psi	Fc - Prll	1650 psi	Fv	265 psi	Ebend- xx	1800 ksi	Density	31.2 pcf
Fb - Compr	1850 psi	Fc - Perp	650 psi	Ft	1100 psi	Eminbend - xx	950 ksi		

Applied Loads

Beam self weight calculated and added to loads
Unif Load: D = 0.0150, S = 0.040 k/ft, Trib= 22.330 ft

Design Summary

Max fb/Fb Ratio = **0.913** : 1
fb : Actual : 2,492.17 psi at 6.415 ft in Span # 1
Fb : Allowable : 2,728.38 psi
Load Comb : +D+S+H

Max fv/FvRatio = **0.540** : 1
fv : Actual : 164.46 psi at 0.000 ft in Span # 1
Fv : Allowable : 304.75 psi
Load Comb : +D+S+H

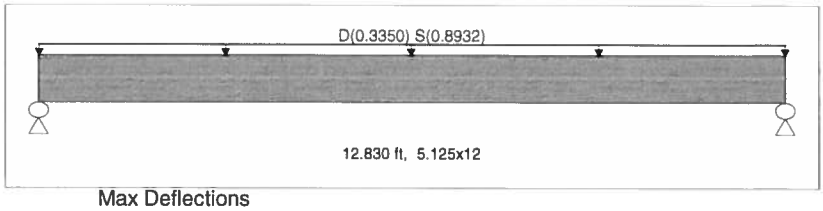

Max Reactions (k)	D	L	Lr	S	W	E	H
Left Support	2.23			5.73			
Right Support	2.23			5.73			

Max Deflections

Downward L+Lr+S	0.412 in	Downward Total	0.573 in
Upward L+Lr+S	0.000 in	Upward Total	0.000 in
Live Load Defl Ratio	373 >360	Total Defl Ratio	268 >240

Whipple Consulting Engineers
2528 N Sullivan Rd
Spokane Valley, WA 99216

Project Title:
Engineer:
Project Descr:

Project ID:

Multiple Simple Beam

File = P:\WCE_WORK\242IDK~9\2MHZA9~D\DBJGBY~H\SEV10W~K\C7A4YC~F\1CFED0~A.EC6
ENERCALC, INC. 1983-2016, Build:6.16.6.7, Ver:6.16.6.7
Lic. # : KW-06009199
Licensee : Whipple Consulting Engineers

Description : Floor Beams (B301 to B305)

Wood Beam Design : B301 (Deck Face Beam)

Calculations per NDS 2012, IBC 2012, CBC 2013, ASCE 7-10

BEAM Size : **5.125x9, GLB, Fully Braced**
Using Allowable Stress Design with IBC 2012 Load Combinations, Major Axis Bending

Wood Species :	DF/DF					Wood Grade :	24F-V4		
Fb - Tension	2,400.0 psi	Fc - Prll	1,650.0 psi	Fv	265.0 psi	Ebend- xx	1,800.0 ksi	Density	31.20 pcf
Fb - Compr	1,850.0 psi	Fc - Perp	650.0 psi	Ft	1,100.0 psi	Eminbend - xx	950.0 ksi		

Applied Loads

Beam self weight calculated and added to loads
Unif Load: D = 0.050, L = 0.040 k/ft, Trib= 3.0 ft

Design Summary

Max fb/Fb Ratio = **0.544** : 1
fb : Actual : 1,306.39 psi at 7.335 ft in Span # 1
Fb : Allowable : 2,400.00 psi
Load Comb : +D+L+H

Max fv/FvRatio = **0.227** : 1
fv : Actual : 60.11 psi at 13.937 ft in Span # 1
Fv : Allowable : 265.00 psi
Load Comb : +D+L+H

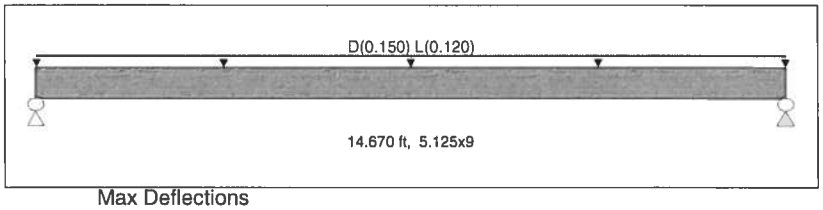

Max Reactions (k)	D	L	Lr	S	W	E	H
Left Support	1.17	0.88					
Right Support	1.17	0.88					

Max Deflections

Downward L+Lr+S	0.224 in	Downward Total	0.523 in
Upward L+Lr+S	0.000 in	Upward Total	0.000 in
Live Load Defl Ratio	784 >360	Total Defl Ratio	336 >240

Wood Beam Design : B302 (Side Entry Way Face Beam)

Calculations per NDS 2012, IBC 2012, CBC 2013, ASCE 7-10

BEAM Size : **5.125x9, GLB, Fully Braced**
Using Allowable Stress Design with IBC 2012 Load Combinations, Major Axis Bending

Wood Species :	DF/DF					Wood Grade :	24F-V4		
Fb - Tension	2,400.0 psi	Fc - Prll	1,650.0 psi	Fv	265.0 psi	Ebend- xx	1,800.0 ksi	Density	31.20 pcf
Fb - Compr	1,850.0 psi	Fc - Perp	650.0 psi	Ft	1,100.0 psi	Eminbend - xx	950.0 ksi		

Applied Loads

Beam self weight calculated and added to loads
Unif Load: D = 0.050, L = 0.10 k/ft, Trib= 4.580 ft

Design Summary

Max fb/Fb Ratio = **0.403** : 1
fb : Actual : 967.10 psi at 4.000 ft in Span # 1
Fb : Allowable : 2,400.00 psi
Load Comb : +D+L+H

Max fv/FvRatio = **0.278** : 1
fv : Actual : 73.74 psi at 0.000 ft in Span # 1
Fv : Allowable : 265.00 psi
Load Comb : +D+L+H

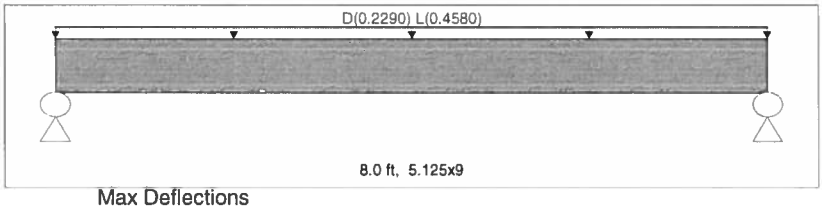

Max Reactions (k)	D	L	Lr	S	W	E	H
Left Support	0.96	1.83					
Right Support	0.96	1.83					

Max Deflections

Downward L+Lr+S	0.076 in	Downward Total	0.115 in
Upward L+Lr+S	0.000 in	Upward Total	0.000 in
Live Load Defl Ratio	1267 >360	Total Defl Ratio	833 >240

Wood Beam Design : B303 (Stair Stringer)

Calculations per NDS 2012, IBC 2012, CBC 2013, ASCE 7-10

BEAM Size : **3.125x12, GLB, Fully Braced**
Using Allowable Stress Design with IBC 2012 Load Combinations, Major Axis Bending

Wood Species :	AC/AC					Wood Grade :	20F - V12		
Fb - Tension	2000 psi	Fc - Prll	1500 psi	Fv	265 psi	Ebend- xx	1500 ksi	Density	28.7 pcf
Fb - Compr	1400 psi	Fc - Perp	560 psi	Ft	925 psi	Eminbend - xx	790 ksi		

Applied Loads

Beam self weight calculated and added to loads
Unif Load: D = 0.050, L = 0.10 k/ft, Trib= 1.750 ft

Design Summary

Max fb/Fb Ratio = **0.670** : 1
fb : Actual : 1,339.41 psi at 7.875 ft in Span # 1
Fb : Allowable : 2,000.00 psi
Load Comb : +D+L+H

Max fv/FvRatio = **0.280** : 1
fv : Actual : 74.27 psi at 0.000 ft in Span # 1
Fv : Allowable : 265.00 psi
Load Comb : +D+L+H

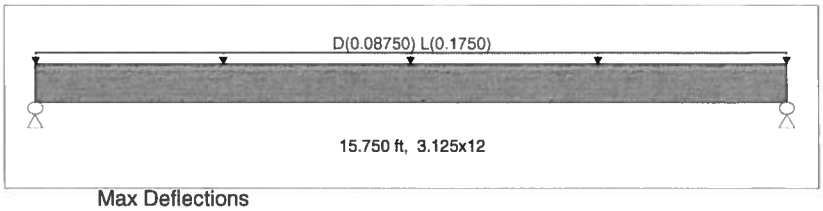

Max Reactions (k)	D	L	Lr	S	W	E	H
Left Support	0.75	1.38					
Right Support	0.75	1.38					

Max Deflections

Downward L+Lr+S	0.361 in	Downward Total	0.557 in
Upward L+Lr+S	0.000 in	Upward Total	0.000 in
Live Load Defl Ratio	523 <600	Total Defl Ratio	339 <480

Whipple Consulting Engineers
2528 N Sullivan Rd
Spokane Valley, WA 99216

Project Title:
Engineer:
Project Descr:

Project ID:

Multiple Simple Beam

File = P:\WCE_WORK\242IDK~9\2MHZA9~D\DBJGBY~H\SEV10W~K\C7A4YC~F\1CFED0~A.EC6
ENERCALC, INC. 1983-2016, Build:6.16.6.7, Ver:6.16.6.7
Lic. # : KW-06009199
Licensee : Whipple Consulting Engineers

Wood Beam Design : B304 (Stair Hanger)

Calculations per NDS 2012, IBC 2012, CBC 2013, ASCE 7-10

BEAM Size : **5.125x12, GLB, Fully Braced**
Using Allowable Stress Design with IBC 2012 Load Combinations, Major Axis Bending
Wood Species : DF/DF
Wood Grade : 24F - V4

Fb - Tension	2400 psi	Fc - Prll	1650 psi	Fv	265 psi	Ebend- xx	1800 ksi	Density	31.2 pcf
Fb - Compr	1850 psi	Fc - Perp	650 psi	Ft	1100 psi	Eminbend - xx	950 ksi		

Applied Loads

Beam self weight calculated and added to loads
Unif Load: D = 0.050, L = 0.10 k/ft, Trib= 5.0 ft
Point: D = 0.750, L = 1.380 k @ 4.330 ft
Point: D = 0.750, L = 1.380 k @ 7.830 ft

Design Summary

Max fb/Fb Ratio = **0.515** : 1
fb : Actual : 1,236.91 psi at 4.335 ft in Span # 1
Fb : Allowable : 2,400.00 psi
Load Comb : +D+L+H

Max fv/FvRatio = **0.353** : 1
fv : Actual : 93.45 psi at 0.000 ft in Span # 1
Fv : Allowable : 265.00 psi
Load Comb : +D+L+H

Max Reactions (k)	D	L	Lr	S	W	E	H
Left Support	1.59	2.99					
Right Support	2.19	4.10					

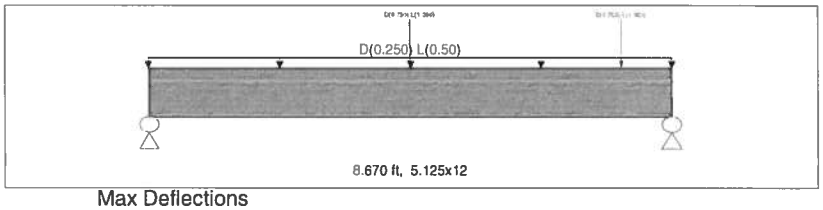

Max Deflections

Downward L+Lr+S	0.080 in	Downward Total	0.122 in
Upward L+Lr+S	0.000 in	Upward Total	0.000 in
Live Load Defl Ratio	1306 >600	Total Defl Ratio	851 >480

Wood Beam Design : B305 (Common Entryway Mid Span)

Calculations per NDS 2012, IBC 2012, CBC 2013, ASCE 7-10

BEAM Size : **6.75x16.5, GLB, Fully Braced**
Using Allowable Stress Design with IBC 2012 Load Combinations, Major Axis Bending
Wood Species : DF/DF
Wood Grade : 24F-V4

Fb - Tension	2,400.0 psi	Fc - Prll	1,650.0 psi	Fv	265.0 psi	Ebend- xx	1,800.0 ksi	Density	31.20 pcf
Fb - Compr	1,850.0 psi	Fc - Perp	650.0 psi	Ft	1,100.0 psi	Eminbend - xx	950.0 ksi		

Applied Loads

Beam self weight calculated and added to loads
Unif Load: D = 0.050, L = 0.10 k/ft, Trib= 9.580 ft

Design Summary

Max fb/Fb Ratio = **0.860** : 1
fb : Actual : 2,026.88 psi at 8.415 ft in Span # 1
Fb : Allowable : 2,355.71 psi
Load Comb : +D+L+H

Max fv/FvRatio = **0.525** : 1
fv : Actual : 139.10 psi at 15.484 ft in Span # 1
Fv : Allowable : 265.00 psi
Load Comb : +D+L+H

Max Reactions (k)	D	L	Lr	S	W	E	H
Left Support	4.23	8.06					
Right Support	4.23	8.06					

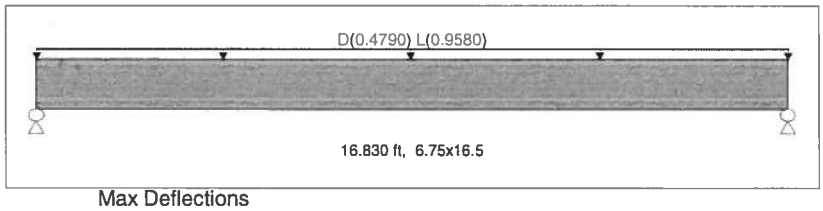

Max Deflections

Downward L+Lr+S	0.382 in	Downward Total	0.583 in
Upward L+Lr+S	0.000 in	Upward Total	0.000 in
Live Load Defl Ratio	528 >360	Total Defl Ratio	346 >240

Whipple Consulting Engineers
2528 N Sullivan Rd
Spokane Valley, WA 99216

Project Title:
Engineer:
Project Descr:

Project ID:

Wood Beam

File = P:\WCE_WORK\242IDK~9\2MHZA9~D\DBJGBY~H\SEV10W~K\C7A4YC~F\1CFED0~A.EC6
ENERCALC, INC. 1983-2016, Build:6.16.6.7, Ver:6.16.6.7

Lic. # : KW-06009199 — Licensee : Whipple Consulting Engineers

Description : B306 (Common Entryway Face Beam - Cont)

CODE REFERENCES

Calculations per NDS 2012, IBC 2012, CBC 2013, ASCE 7-10
Load Combination Set : IBC 2012

Material Properties

Analysis Method : Allowable Stress Design
Load Combination : IBC 2012

Wood Species : DF/DF
Wood Grade : 24F - V4

Fb - Tension	2,400.0 psi
Fb - Compr	1,850.0 psi
Fc - Prll	1,650.0 psi
Fc - Perp	650.0 psi
Fv	265.0 psi
Ft	1,100.0 psi

E : Modulus of Elasticity

Ebend- xx	1,800.0 ksi
Eminbend - xx	950.0 ksi
Ebend- yy	1,600.0 ksi
Eminbend - yy	850.0 ksi
Density	31.20 pcf

Beam Bracing : Beam is Fully Braced against lateral-torsional buckling

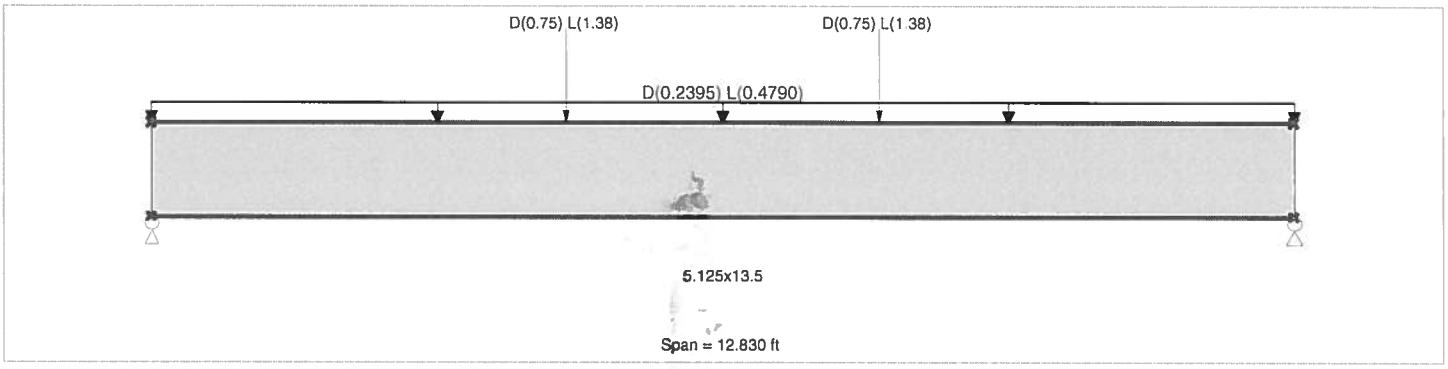

Applied Loads

Service loads entered. Load Factors will be applied for calculations.

Beam self weight calculated and added to loads
Loads on all spans...
Uniform Load on ALL spans : D = 0.050, L = 0.10 ksf, Tributary Width = 4.790 ft
Point Load : D = 0.750, L = 1.380 k @ 4.670 ft
Point Load : D = 0.750, L = 1.380 k @ 8.170 ft

DESIGN SUMMARY

Design OK

Maximum Bending Stress Ratio	=	0.804 : 1	Maximum Shear Stress Ratio	=	0.492 : 1
Section used for this span		5.125x13.5	Section used for this span		5.125x13.5
fb : Actual	=	1,929.35 psi	fv : Actual	=	130.36 psi
FB : Allowable	=	2,400.00 psi	Fv : Allowable	=	265.00 psi
Load Combination		+D+L+H	Load Combination		+D+L+H
Location of maximum on span	=	6.415 ft	Location of maximum on span	=	11.706 ft
Span # where maximum occurs	=	Span # 1	Span # where maximum occurs	=	Span # 1

Maximum Deflection

Max Downward Transient Deflection	0.256 in	Ratio =	602 >=360
Max Upward Transient Deflection	0.000 in	Ratio =	0 <360
Max Downward Total Deflection	0.393 in	Ratio =	392 >=180
Max Upward Total Deflection	0.000 in	Ratio =	0 <180

Maximum Forces & Stresses for Load Combinations

Load Combination / Segment Length	Span #	Max Stress Ratios M	V	C_d	$C_{F/V}$	C_i	C_r	C_m	C_t	C_L	Moment Values M	fb	F'b	Shear Values V	fv	F'v
+D+H													0.00	0.00	0.00	0.00
Length = 12.830 ft	1	0.312	0.191	0.90	1.000	1.00	1.00	1.00	1.00	1.00	8.74	673.35	2160.00	2.10	45.47	238.50
+D+L+H					1.000	1.00	1.00	1.00	1.00	1.00			0.00	0.00	0.00	0.00
Length = 12.830 ft	1	0.804	0.492	1.00	1.000	1.00	1.00	1.00	1.00	1.00	25.03	1,929.35	2400.00	6.01	130.36	265.00
+D+Lr+H					1.000	1.00	1.00	1.00	1.00	1.00			0.00	0.00	0.00	0.00
Length = 12.830 ft	1	0.224	0.137	1.25	1.000	1.00	1.00	1.00	1.00	1.00	8.74	673.35	3000.00	2.10	45.47	331.25
+D+S+H					1.000	1.00	1.00	1.00	1.00	1.00			0.00	0.00	0.00	0.00
Length = 12.830 ft	1	0.244	0.149	1.15	1.000	1.00	1.00	1.00	1.00	1.00	8.74	673.35	2760.00	2.10	45.47	304.75

Whipple Consulting Engineers
2528 N Sullivan Rd
Spokane Valley, WA 99216

Project Title:
Engineer:
Project Descr:

Project ID:

Wood Beam

File = P:\WCE_WORK\242IDK~9\2MHZA9~D\DBJGBY~H\SEV10W~K\C7A4YC~F\1CFED0~A.EC6
ENERCALC, INC. 1983-2016, Build:6.16.6.7, Ver:6.16.6.7

Lic. # : KW-06009199

Licensee : Whipple Consulting Engineers

Description : B306 (Common Entryway Face Beam - Cont)

Load Combination / Segment Length	Span #	Max Stress Ratios M	V	C_d	$C_{F/V}$	C_i	C_r	C_m	C_t	C_L	Moment Values M	fb	F'b	Shear Values V	fv	F'v
+D+0.750Lr+0.750L+H					1.000	1.00	1.00	1.00	1.00	1.00			0.00	0.00	0.00	0.00
Length = 12.830 ft	1	0.538	0.329	1.25	1.000	1.00	1.00	1.00	1.00	1.00	20.96	1,615.35	3000.00	5.03	109.13	331.25
+D+0.750L+0.750S+H					1.000	1.00	1.00	1.00	1.00	1.00			0.00	0.00	0.00	0.00
Length = 12.830 ft	1	0.585	0.358	1.15	1.000	1.00	1.00	1.00	1.00	1.00	20.96	1,615.35	2760.00	5.03	109.13	304.75
+D+0.60W+H					1.000	1.00	1.00	1.00	1.00	1.00			0.00	0.00	0.00	0.00
Length = 12.830 ft	1	0.175	0.107	1.60	1.000	1.00	1.00	1.00	1.00	1.00	8.74	673.35	3840.00	2.10	45.47	424.00
+D+0.70E+H					1.000	1.00	1.00	1.00	1.00	1.00			0.00	0.00	0.00	0.00
Length = 12.830 ft	1	0.175	0.107	1.60	1.000	1.00	1.00	1.00	1.00	1.00	8.74	673.35	3840.00	2.10	45.47	424.00
+D+0.750Lr+0.750L+0.450W+H					1.000	1.00	1.00	1.00	1.00	1.00			0.00	0.00	0.00	0.00
Length = 12.830 ft	1	0.421	0.257	1.60	1.000	1.00	1.00	1.00	1.00	1.00	20.96	1,615.35	3840.00	5.03	109.13	424.00
+D+0.750L+0.750S+0.450W+H					1.000	1.00	1.00	1.00	1.00	1.00			0.00	0.00	0.00	0.00
Length = 12.830 ft	1	0.421	0.257	1.60	1.000	1.00	1.00	1.00	1.00	1.00	20.96	1,615.35	3840.00	5.03	109.13	424.00
+D+0.750L+0.750S+0.5250E+H					1.000	1.00	1.00	1.00	1.00	1.00			0.00	0.00	0.00	0.00
Length = 12.830 ft	1	0.421	0.257	1.60	1.000	1.00	1.00	1.00	1.00	1.00	20.96	1,615.35	3840.00	5.03	109.13	424.00
+0.60D+0.60W+0.60H					1.000	1.00	1.00	1.00	1.00	1.00			0.00	0.00	0.00	0.00
Length = 12.830 ft	1	0.105	0.064	1.60	1.000	1.00	1.00	1.00	1.00	1.00	5.24	404.01	3840.00	1.26	27.28	424.00
+0.60D+0.70E+0.60H					1.000	1.00	1.00	1.00	1.00	1.00			0.00	0.00	0.00	0.00
Length = 12.830 ft	1	0.105	0.064	1.60	1.000	1.00	1.00	1.00	1.00	1.00	5.24	404.01	3840.00	1.26	27.28	424.00

Overall Maximum Deflections

Load Combination	Span	Max. "-" Defl	Location in Span	Load Combination	Max. "+" Defl	Location in Span
+D+L+H	1	0.3925	6.462		0.0000	0.000

Vertical Reactions

Support notation : Far left is #1 Values in KIPS

Load Combination	Support 1	Support 2
Overall MAXimum	6.834	6.837
Overall MINimum	1.429	1.430
+D+H	2.382	2.383
+D+L+H	6.834	6.837
+D+Lr+H	2.382	2.383
+D+S+H	2.382	2.383
+D+0.750Lr+0.750L+H	5.721	5.724
+D+0.750L+0.750S+H	5.721	5.724
+D+0.60W+H	2.382	2.383
+D+0.70E+H	2.382	2.383
+D+0.750Lr+0.750L+0.450W+H	5.721	5.724
+D+0.750L+0.750S+0.450W+H	5.721	5.724
+D+0.750L+0.750S+0.5250E+H	5.721	5.724
+0.60D+0.60W+0.60H	1.429	1.430
+0.60D+0.70E+0.60H	1.429	1.430
D Only	2.382	2.383
Lr Only		
L Only	4.452	4.454
S Only		
W Only		
E Only		
H Only		

Whipple Consulting Engineers
2528 N Sullivan Rd
Spokane Valley, WA 99216

Project Title:
Engineer:
Project Descr:

Project ID:

Multiple Simple Beam

File = P:\WCE_WORK\242IDK~9\2MHZA9~D\DBJGBY~H\SEV10W~K\C7A4YC~F\1CFED0~A.EC6
ENERCALC, INC. 1983-2016, Build:6.16.6.7, Ver:6.16.6.7

Lic. # : KW-06009199 — Licensee : Whipple Consulting Engineers

Description : Headers

Wood Beam Design : H401 (Worse Case Header at Roof)

Calculations per NDS 2012, IBC 2012, CBC 2013, ASCE 7-10

BEAM Size : **2-2x10, Sawn, Fully Braced**
Using Allowable Stress Design with IBC 2012 Load Combinations, Major Axis Bending

Wood Species :	Douglas Fir - Larch				Wood Grade : No.2				
Fb - Tension	900.0 psi	Fc - Prll	1,350.0 psi	Fv	180.0 psi	Ebend- xx	1,600.0 ksi	Density	31.20 pcf
Fb - Compr	900.0 psi	Fc - Perp	625.0 psi	Ft	575.0 psi	Eminbend - xx	580.0 ksi		

Applied Loads

Beam self weight calculated and added to loads
Unif Load: D = 0.0150, S = 0.040 k/ft, Trib= 13.830 ft

Design Summary

Max fb/Fb Ratio = **0.850** : 1
fb : Actual : 967.71 psi at 3.000 ft in Span # 1
Fb : Allowable : 1,138.50 psi
Load Comb : +D+S+H

Max fv/FvRatio = **0.448** : 1
fv : Actual : 92.83 psi at 5.240 ft in Span # 1
Fv : Allowable : 207.00 psi
Load Comb : +D+S+H

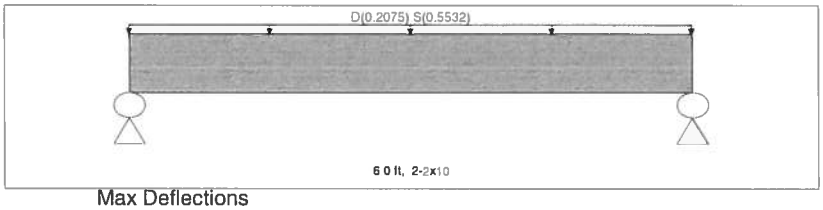

Max Reactions (k)	D	L	Lr	S	W	E	H
Left Support	0.64			1.66			
Right Support	0.64			1.66			

Max Deflections

Downward L+Lr+S	0.051 in	Downward Total	0.071 in
Upward L+Lr+S	0.000 in	Upward Total	0.000 in
Live Load Defl Ratio	1405 >360	Total Defl Ratio	1014 >240

Wood Beam Design : H402 (Side Entryway w/ PL)

Calculations per NDS 2012, IBC 2012, CBC 2013, ASCE 7-10

BEAM Size : **3-2x10, Sawn, Fully Braced**
Using Allowable Stress Design with IBC 2012 Load Combinations, Major Axis Bending

Wood Species :	Douglas Fir - Larch				Wood Grade : No.2				
Fb - Tension	900.0 psi	Fc - Prll	1,350.0 psi	Fv	180.0 psi	Ebend- xx	1,600.0 ksi	Density	31.20 pcf
Fb - Compr	900.0 psi	Fc - Perp	625.0 psi	Ft	575.0 psi	Eminbend - xx	580.0 ksi		

Applied Loads

Beam self weight calculated and added to loads
Unif Load: D = 0.0150, S = 0.040 k/ft, Trib= 2.0 ft
Point: D = 1.290, S = 3.090 k @ 3.0 ft

Design Summary

Max fb/Fb Ratio = **0.922** : 1
fb : Actual : 1,049.63 psi at 3.000 ft in Span # 1
Fb : Allowable : 1,138.50 psi
Load Comb : +D+S+H

Max fv/FvRatio = **0.493** : 1
fv : Actual : 102.14 psi at 4.233 ft in Span # 1
Fv : Allowable : 207.00 psi
Load Comb : +D+S+H

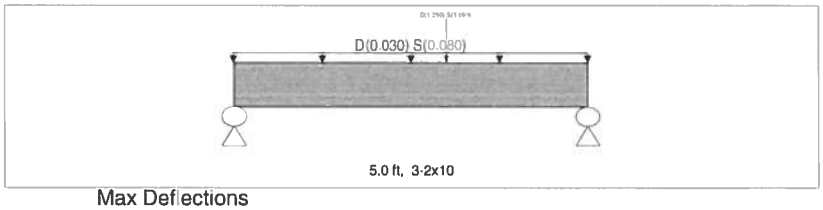

Max Reactions (k)	D	L	Lr	S	W	E	H
Left Support	0.61			1.44			
Right Support	0.87			2.05			

Max Deflections

Downward L+Lr+S	0.030 in	Downward Total	0.043 in
Upward L+Lr+S	0.000 in	Upward Total	0.000 in
Live Load Defl Ratio	1982 >360	Total Defl Ratio	1392 >240

Wood Beam Design : H301 (Typical Exterior Header)

Calculations per NDS 2012, IBC 2012, CBC 2013, ASCE 7-10

BEAM Size : **2-2x10, Sawn, Fully Braced**
Using Allowable Stress Design with IBC 2012 Load Combinations, Major Axis Bending

Wood Species :	Douglas Fir - Larch				Wood Grade : No.2				
Fb - Tension	900.0 psi	Fc - Prll	1,350.0 psi	Fv	180.0 psi	Ebend- xx	1,600.0 ksi	Density	31.20 pcf
Fb - Compr	900.0 psi	Fc - Perp	625.0 psi	Ft	575.0 psi	Eminbend - xx	580.0 ksi		

Applied Loads

Beam self weight calculated and added to loads
Unif Load: D = 0.0250, L = 0.040 k/ft, Trib= 8.750 ft

Design Summary

Max fb/Fb Ratio = **0.509** : 1
fb : Actual : 503.81 psi at 2.500 ft in Span # 1
Fb : Allowable : 990.00 psi
Load Comb : +D+L+H

Max fv/FvRatio = **0.299** : 1
fv : Actual : 53.85 psi at 4.233 ft in Span # 1
Fv : Allowable : 180.00 psi
Load Comb : +D+L+H

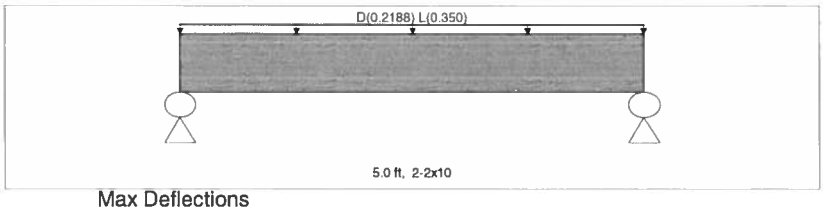

Max Reactions (k)	D	L	Lr	S	W	E	H
Left Support	0.56	0.88					
Right Support	0.56	0.88					

Max Deflections

Downward L+Lr+S	0.016 in	Downward Total	0.026 in
Upward L+Lr+S	0.000 in	Upward Total	0.000 in
Live Load Defl Ratio	3838 >360	Total Defl Ratio	2337 >240

Whipple Consulting Engineers
2528 N Sullivan Rd
Spokane Valley, WA 99216

Project Title:
Engineer:
Project Descr:

Project ID:

Multiple Simple Beam

File = P:\WCE_WORK\242IDK~9\2MHZA9~D\DBJGBY~H\SEV10W~K\C7A4YC~F\1CFED0~A.EC6
ENERCALC, INC. 1983-2016, Build:6.16.6.7, Ver:6.16.6.7
Lic. # : KW-06009199
Licensee : Whipple Consulting Engineers

Wood Beam Design : H302 (Header at Deck)

Calculations per NDS 2012, IBC 2012, CBC 2013, ASCE 7-10

BEAM Size : **3-2x10, Sawn, Fully Braced**
Using Allowable Stress Design with IBC 2012 Load Combinations, Major Axis Bending
Wood Species : Douglas Fir - Larch Wood Grade : No.2

Fb - Tension	900.0 psi	Fc - Prll	1,350.0 psi	Fv	180.0 psi	Ebend- xx	1,600.0 ksi	Density	31.20 pcf
Fb - Compr	900.0 psi	Fc - Perp	625.0 psi	Ft	575.0 psi	Eminbend - xx	580.0 ksi		

Applied Loads

Beam self weight calculated and added to loads
Unif Load: D = 0.0250, L = 0.040 k/ft, Trib= 8.750 ft
Unif Load: D = 0.050, L = 0.040 k/ft, Trib= 3.0 ft

Design Summary

Max fb/Fb Ratio = **0.721** : 1
fb : Actual : 713.39 psi at 3.000 ft in Span # 1
Fb : Allowable : 990.00 psi
Load Comb : +D+L+H

Max fv/FvRatio = **0.380** : 1
fv : Actual : 68.43 psi at 5.240 ft in Span # 1
Fv : Allowable : 180.00 psi
Load Comb : +D+L+H

Max Reactions (k)	D	L	Lr	S	W	E	H
Left Support	1.13	1.41					
Right Support	1.13	1.41					

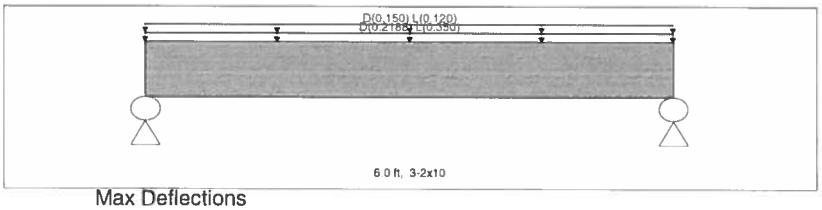

Max Deflections

Downward L+Lr+S	0.029 in	Downward Total	0.052 in
Upward L+Lr+S	0.000 in	Upward Total	0.000 in
Live Load Defl Ratio	2481 >360	Total Defl Ratio	1375 >240

Wood Beam Design : H303 (Typical Interior Header)

Calculations per NDS 2012, IBC 2012, CBC 2013, ASCE 7-10

BEAM Size : **2-2x8, Sawn, Fully Braced**
Using Allowable Stress Design with IBC 2012 Load Combinations, Major Axis Bending
Wood Species : Douglas Fir - Larch Wood Grade : No.2

Fb - Tension	900.0 psi	Fc - Prll	1,350.0 psi	Fv	180.0 psi	Ebend- xx	1,600.0 ksi	Density	31.20 pcf
Fb - Compr	900.0 psi	Fc - Perp	625.0 psi	Ft	575.0 psi	Eminbend - xx	580.0 ksi		

Applied Loads

Beam self weight calculated and added to loads
Unif Load: D = 0.0250, L = 0.040 k/ft, Trib= 13.420 ft

Design Summary

Max fb/Fb Ratio = **0.514** : 1
fb : Actual : 555.06 psi at 1.665 ft in Span # 1
Fb : Allowable : 1,080.00 psi
Load Comb : +D+L+H

Max fv/FvRatio = **0.358** : 1
fv : Actual : 64.45 psi at 0.000 ft in Span # 1
Fv : Allowable : 180.00 psi
Load Comb : +D+L+H

Max Reactions (k)	D	L	Lr	S	W	E	H
Left Support	0.57	0.89					
Right Support	0.57	0.89					

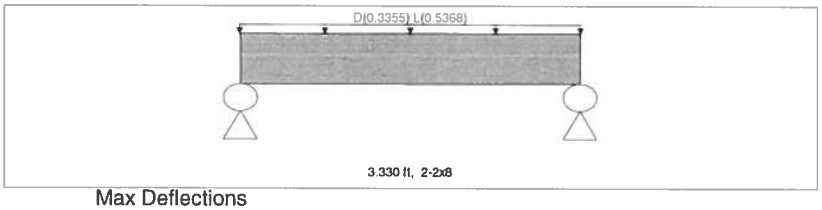

Max Deflections

Downward L+Lr+S	0.010 in	Downward Total	0.016 in
Upward L+Lr+S	0.000 in	Upward Total	0.000 in
Live Load Defl Ratio	4079 >360	Total Defl Ratio	2497 >240

Whipple Consulting Engineers
2528 N Sullivan Rd
Spokane Valley, WA 99216

Project Title:
Engineer:
Project Descr:

Project ID:

Multiple Simple Beam

File = P:\WCE_WORK\242IDK~9\2MHZA9~D\DBJGBY~H\SEV10W~K\C7A4YC~F\1CFED0~A.EC6
ENERCALC, INC. 1983-2016, Build:6.16.6.7, Ver:6.16.6.7
Lic. # : KW-06009199
Licensee : Whipple Consulting Engineers

Description : Deck and Corridor Joists

Wood Beam Design : Typical Deck Joists

Calculations per NDS 2012, IBC 2012, CBC 2013, ASCE 7-10

BEAM Size : **2x8, Sawn, Fully Unbraced**
Using Allowable Stress Design with IBC 2012 Load Combinations, Major Axis Bending

Wood Species :	Douglas Fir - Larch				Wood Grade : No.2				
Fb - Tension	900.0 psi	Fc - Prll	1,350.0 psi	Fv	180.0 psi	Ebend- xx	1,600.0 ksi	Density	31.20 pcf
Fb - Compr	900.0 psi	Fc - Perp	625.0 psi	Ft	575.0 psi	Eminbend - xx	580.0 ksi		

Applied Loads

Unif Load: D = 0.050, L = 0.040 k/ft, Trib= 1.330 ft

Design Summary

Max fb/Fb Ratio = **0.409 : 1**
fb : Actual : 491.89 psi at 3.000 ft in Span # 1
Fb : Allowable : 1,201.84 psi
Load Comb : +D+L+H

Max fv/FvRatio = **0.220 : 1**
fv : Actual : 39.62 psi at 5.400 ft in Span # 1
Fv : Allowable : 180.00 psi
Load Comb : +D+L+H

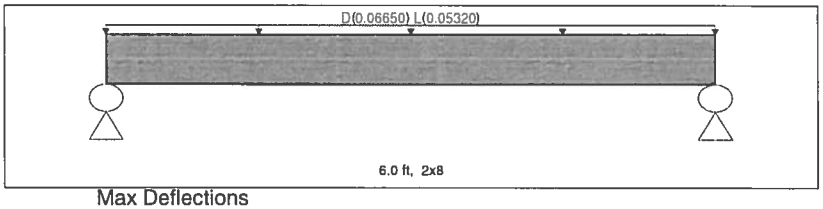

Max Reactions (k)	D	L	Lr	S	W	E	H
Left Support	0.20	0.16					
Right Support	0.20	0.16					

Max Deflections

Downward L+Lr+S	0.020 in	Downward Total	0.046 in
Upward L+Lr+S	0.000 in	Upward Total	0.000 in
Live Load Defl Ratio	3518 >360	Total Defl Ratio	1563 >240

Wood Beam Design : Corridor Joists (9'-7" MAX)

Calculations per NDS 2012, IBC 2012, CBC 2013, ASCE 7-10

BEAM Size : **2x10, Sawn, Fully Braced**
Using Allowable Stress Design with IBC 2012 Load Combinations, Major Axis Bending

Wood Species :	Douglas Fir - Larch				Wood Grade : No.2				
Fb - Tension	900.0 psi	Fc - Prll	1,350.0 psi	Fv	180.0 psi	Ebend- xx	1,600.0 ksi	Density	31.20 pcf
Fb - Compr	900.0 psi	Fc - Perp	625.0 psi	Ft	575.0 psi	Eminbend - xx	580.0 ksi		

Applied Loads

Unif Load: D = 0.050, L = 0.10 k/ft, Trib= 1.0 ft

Design Summary

Max fb/Fb Ratio = **0.848 : 1**
fb : Actual : 965.36 psi at 4.790 ft in Span # 1
Fb : Allowable : 1,138.50 psi
Load Comb : +D+L+H

Max fv/FvRatio = **0.362 : 1**
fv : Actual : 65.25 psi at 8.814 ft in Span # 1
Fv : Allowable : 180.00 psi
Load Comb : +D+L+H

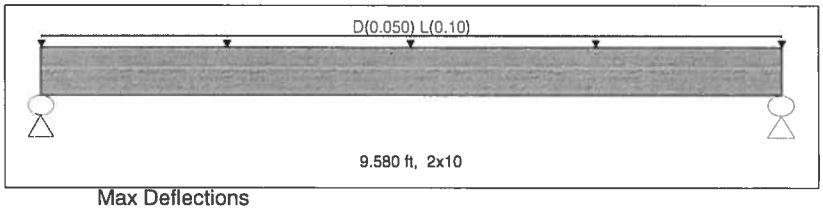

Max Reactions (k)	D	L	Lr	S	W	E	H
Left Support	0.24	0.48					
Right Support	0.24	0.48					

Max Deflections

Downward L+Lr+S	0.120 in	Downward Total	0.181 in
Upward L+Lr+S	0.000 in	Upward Total	0.000 in
Live Load Defl Ratio	955 >360	Total Defl Ratio	636 >240

Wood Beam Design : Entry way Joists (8'-11" MAX)

Calculations per NDS 2012, IBC 2012, CBC 2013, ASCE 7-10

BEAM Size : **2x10, Sawn, Fully Braced**
Using Allowable Stress Design with IBC 2012 Load Combinations, Major Axis Bending

Wood Species :	Douglas Fir - Larch				Wood Grade : No.2				
Fb - Tension	900.0 psi	Fc - Prll	1,350.0 psi	Fv	180.0 psi	Ebend- xx	1,600.0 ksi	Density	31.20 pcf
Fb - Compr	900.0 psi	Fc - Perp	625.0 psi	Ft	575.0 psi	Eminbend - xx	580.0 ksi		

Applied Loads

Unif Load: D = 0.050, L = 0.10 k/ft, Trib= 1.330 ft

Design Summary

Max fb/Fb Ratio = **0.978 : 1**
fb : Actual : 1,113.12 psi at 4.460 ft in Span # 1
Fb : Allowable : 1,138.50 psi
Load Comb : +D+L+H

Max fv/FvRatio = **0.445 : 1**
fv : Actual : 80.16 psi at 8.177 ft in Span # 1
Fv : Allowable : 180.00 psi
Load Comb : +D+L+H

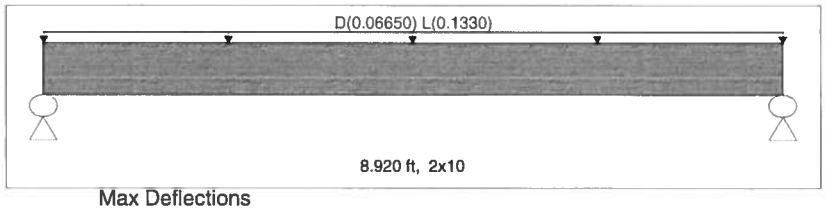

Max Reactions (k)	D	L	Lr	S	W	E	H
Left Support	0.30	0.59					
Right Support	0.30	0.59					

Max Deflections

Downward L+Lr+S	0.120 in	Downward Total	0.180 in
Upward L+Lr+S	0.000 in	Upward Total	0.000 in
Live Load Defl Ratio	889 >360	Total Defl Ratio	593 >240

Whipple Consulting Engineers
2528 N Sullivan Rd
Spokane Valley, WA 99216

Project Title:
Engineer:
Project Descr:

Project ID:

Multiple Simple Beam

File = C:\Users\jaredk\Desktop\16-162~1.EC6
ENERCALC, INC. 1983-2016, Build:6.16.6.7, Ver:6.16.6.7
Lic. # : KW-06009199
Licensee : Whipple Consulting Engineers

Description : Cantielvered Decks

Wood Beam Design : Cantilevered Deck Joists

Calculations per NDS 2012, IBC 2012, CBC 2013, ASCE 7-10

BEAM Size : **1.75x9.25, VersaLam, Fully Braced**
Using Allowable Stress Design with IBC 2012 Load Combinations, Major Axis Bending

Wood Species :	Boise Cascade				Wood Grade : Versa Lam 2.0 2800 West				
Fb - Tension	2,800.0 psi	Fc - Prll	3,000.0 psi	Fv	285.0 psi	Ebend- xx	2,000.0 ksi	Density	41.750 pcf
Fb - Compr	2,800.0 psi	Fc - Perp	750.0 psi	Ft	1,950.0 psi	Eminbend - xx	1,036.83 ksi		

Applied Loads

Beam self weight calculated and added to loads
Unif Load: D = 0.0250, L = 0.040 k/ft, 0.0 ft to 12.0 ft, Trib= 1.330 ft
Unif Load: D = 0.050, L = 0.040 k/ft, 12.0 to 17.0 ft, Trib= 1.330 ft

Design Summary

Max fb/Fb Ratio = **0.387** : 1
fb : Actual : 1,083.34 psi at 11.000 ft in Span # 1
Fb : Allowable : 2,800.00 psi
Load Comb : +D+L+H, LL Comb Run (*L)

Max fv/FvRatio = **0.230** : 1
fv : Actual : 65.43 psi at 11.000 ft in Span # 1
Fv : Allowable : 285.00 psi
Load Comb : +D+L+H, LL Comb Run (LL)

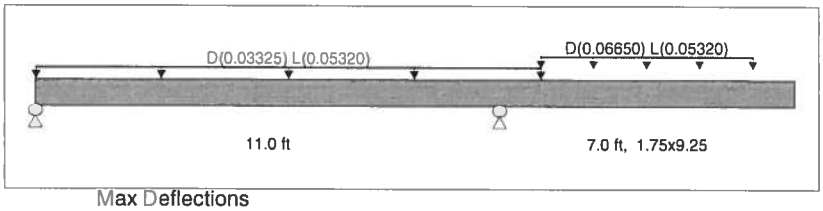

Max Reactions (k)	D	L	Lr	S	W	E	H
Left Support	0.09	0.29					
Right Support	0.73	0.70					

Max Deflections

Downward L+Lr+S	0.263 in	Downward Total	0.510 in
Upward L+Lr+S	-0.155 in	Upward Total	-0.080 in
Live Load Defl Ratio	638 >360	Total Defl Ratio	328 >180

Wood Beam Design : Garage Beam at mid Span

Calculations per NDS 2012, IBC 2012, CBC 2013, ASCE 7-10

BEAM Size : **5.125x12, GLB, Fully Unbraced**
Using Allowable Stress Design with IBC 2012 Load Combinations, Major Axis Bending

Wood Species :	DF/DF				Wood Grade : 24F - V4				
Fb - Tension	2,400.0 psi	Fc - Prll	1,650.0 psi	Fv	265.0 psi	Ebend- xx	1,800.0 ksi	Density	31.20 pcf
Fb - Compr	1,850.0 psi	Fc - Perp	650.0 psi	Ft	1,100.0 psi	Eminbend - xx	950.0 ksi		

Applied Loads

Unif Load: D = 0.0250, L = 0.040 k/ft, Trib= 11.50 ft

Design Summary

Max fb/Fb Ratio = **0.780** : 1
fb : Actual : 1,851.09 psi at 7.125 ft in Span # 1
Fb : Allowable : 2,373.63 psi
Load Comb : +D+L+H

Max fv/FvRatio = **0.422** : 1
fv : Actual : 111.71 psi at 0.000 ft in Span # 1
Fv : Allowable : 265.00 psi
Load Comb : +D+L+H

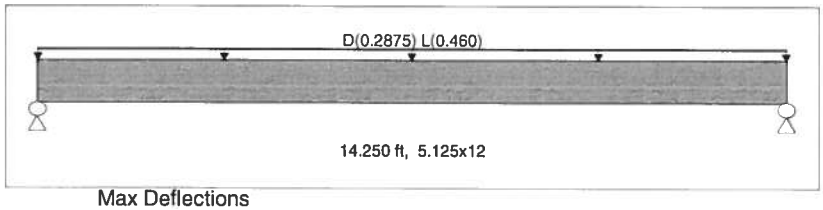

Max Reactions (k)	D	L	Lr	S	W	E	H
Left Support	2.05	3.28					
Right Support	2.05	3.28					

Max Deflections

Downward L+Lr+S	0.323 in	Downward Total	0.525 in
Upward L+Lr+S	0.000 in	Upward Total	0.000 in
Live Load Defl Ratio	529 >360	Total Defl Ratio	325 >180

Whipple Consulting Engineers
2528 N Sullivan Rd
Spokane Valley, WA 99216

Project Title:
Engineer:
Project Descr:

Project ID:

Multiple Simple Beam

File = C:\Users\jaredk\Desktop\16-162-1.EC6
ENERCALC, INC. 1983-2016, Build:6.16.6.7, Ver:6.16.6.7
Lic. # : KW-06009199
Licensee : Whipple Consulting Engineers

Description : Garage Headers

Wood Beam Design : --None--

Calculations per NDS 2012, IBC 2012, CBC 2013, ASCE 7-10

BEAM Size : **5.125x9, GLB, Fully Braced**
Using Allowable Stress Design with IBC 2012 Load Combinations, Major Axis Bending

Wood Species :	DF/DF					Wood Grade :	24F-V4		
Fb - Tension	2,400.0 psi	Fc - Prll	1,650.0 psi	Fv	265.0 psi	Ebend- xx	1,800.0 ksi	Density	31.20 pcf
Fb - Compr	1,850.0 psi	Fc - Perp	650.0 psi	Ft	1,100.0 psi	Eminbend - xx	950.0 ksi		

Applied Loads

Beam self weight calculated and added to loads
Unif Load: D = 0.0250, L = 0.040 k/ft, Trib= 17.0 ft

Design Summary

Max fb/Fb Ratio = **0.816 : 1**
fb : Actual : 1,958.04 psi at 4.500 ft in Span # 1
Fb : Allowable : 2,400.00 psi
Load Comb : +D+L+H

Max fv/FvRatio = **0.517 : 1**
fv : Actual : 137.06 psi at 8.280 ft in Span # 1
Fv : Allowable : 265.00 psi
Load Comb : +D+L+H

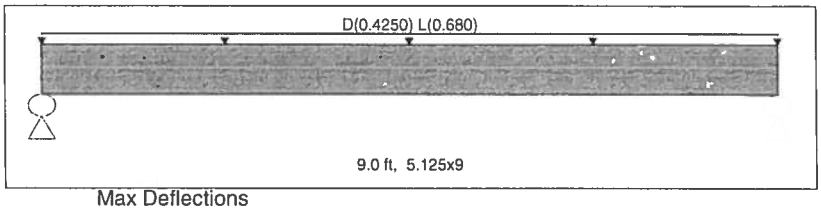

Max Reactions (k)	D	L	Lr	S	W	E	H
Left Support	1.96	3.06					
Right Support	1.96	3.06					

Max Deflections

Downward L+Lr+S	0.180 in	Downward Total	0.295 in
Upward L+Lr+S	0.000 in	Upward Total	0.000 in
Live Load Defl Ratio	599 >360	Total Defl Ratio	365 >240

Wood Beam Design : Garage HDR Worst Case w/ GT Load

Calculations per NDS 2012, IBC 2012, CBC 2013, ASCE 7-10

BEAM Size : **5.125x10.5, GLB, Fully Braced**
Using Allowable Stress Design with IBC 2012 Load Combinations, Major Axis Bending

Wood Species :	DF/DF					Wood Grade :	24F - V4		
Fb - Tension	2,400.0 psi	Fc - Prll	1,650.0 psi	Fv	265.0 psi	Ebend- xx	1,800.0 ksi	Density	31.20 pcf
Fb - Compr	1,850.0 psi	Fc - Perp	650.0 psi	Ft	1,100.0 psi	Eminbend - xx	950.0 ksi		

Applied Loads

Beam self weight calculated and added to loads
Unif Load: D = 0.0250, L = 0.040 k/ft, Trib= 5.330 ft
Unif Load: D = 0.0250, L = 0.040 k/ft, Trib= 2.0 ft
Point: D = 2.930, S = 7.290 k @ 1.670 ft

Design Summary

Max fb/Fb Ratio = **0.696 : 1**
fb : Actual : 1,921.59 psi at 1.680 ft in Span # 1
Fb : Allowable : 2,760.00 psi
Load Comb : +D+S+H

Max fv/FvRatio = **0.826 : 1**
fv : Actual : 251.74 psi at 0.000 ft in Span # 1
Fv : Allowable : 304.75 psi
Load Comb : +D+S+H

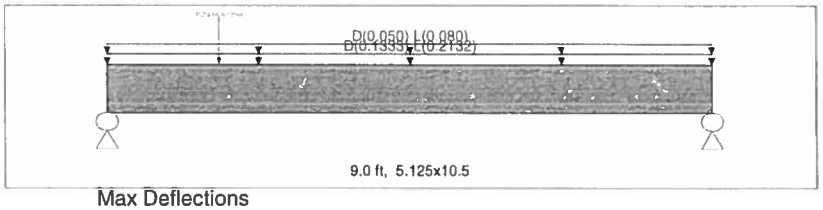

Max Reactions (k)	D	L	Lr	S	W	E	H
Left Support	3.26	1.32		5.94			
Right Support	1.42	1.32		1.35			

Max Deflections

Downward L+Lr+S	0.117 in	Downward Total	0.203 in
Upward L+Lr+S	0.000 in	Upward Total	0.000 in
Live Load Defl Ratio	920 >360	Total Defl Ratio	531 >240

Wood Beam Design : Garage Header w/Deck Load

Calculations per NDS 2012, IBC 2012, CBC 2013, ASCE 7-10

BEAM Size : **5.125x10.5, GLB, Fully Braced**
Using Allowable Stress Design with IBC 2012 Load Combinations, Major Axis Bending

Wood Species :	DF/DF					Wood Grade :	24F-V4		
Fb - Tension	2,400.0 psi	Fc - Prll	1,650.0 psi	Fv	265.0 psi	Ebend- xx	1,800.0 ksi	Density	31.20 pcf
Fb - Compr	1,850.0 psi	Fc - Perp	650.0 psi	Ft	1,100.0 psi	Eminbend - xx	950.0 ksi		

Applied Loads

Beam self weight calculated and added to loads
Unif Load: D = 0.0250, L = 0.040 k/ft, Trib= 5.50 ft
Unif Load: D = 0.0250, L = 0.040 k/ft, Trib= 2.0 ft
Unif Load: D = 0.050, L = 0.040 k/ft, Trib= 5.0 ft

Design Summary

Max fb/Fb Ratio = **0.510 : 1**
fb : Actual : 1,224.60 psi at 4.500 ft in Span # 1
Fb : Allowable : 2,400.00 psi
Load Comb : +D+L+H

Max fv/FvRatio = **0.362 : 1**
fv : Actual : 96.04 psi at 0.000 ft in Span # 1
Fv : Allowable : 265.00 psi
Load Comb : +D+L+H

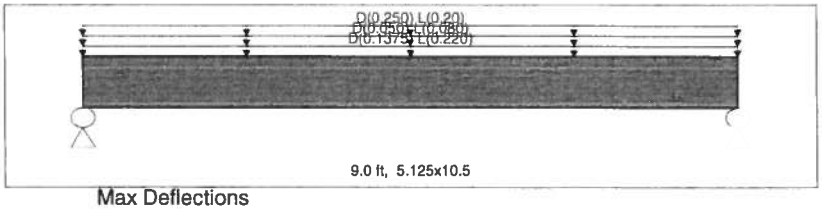

Max Reactions (k)	D	L	Lr	S	W	E	H
Left Support	2.02	2.25					

Max Deflections

Downward L+Lr+S	0.083 in	Downward Total	0.158 in
Upward L+Lr+S	0.000 in	Upward Total	0.000 in

COLUMNS

12-PLEX COLUMN KEY

C101 (TYPICAL DECK COLUMN)

H = 10'-0"

ROOF LOAD (B401)

DL = 400#
SL = 1080#

∴ GL 5 1/8 x 6

DECK (B301)

DL = 1.17k
LL = 0.88k

C102 (SIDE ENTRY WAY COL)

H = 10'-0"

ROOF LOAD (B402)

DL = 1.2k
SL = 3.09k

∴ GL 5 1/8 x 6

B302

DL = 2.87k
LL = 4.39k

B304

DL = 2.19k
LL = 4.10k

C103 (COMMON ENTRY WAY)

H=10'-0"
B306

DL = 1.179k
LL = 2.238k

∴ GL 5 1/8 x 6

B303

DL = 0.75k
LL = 1.38k

C104 (BUNDLED STUDS UNDER B403)

H = 10'-0"

B403

DL = 2.23k
SL = 5.73k

C105 (BUNDLED STUDS UNDER B305)

H=10'-0"

B305

DL = 4.93k
LL = 8.06k

C106 (BUNDLED STUDS UNDER B308)

H=10'-0"

B08

DL = 1.89k
LL = 2.96k

WCE Whipple Consulting Engineers, Inc.
2528 N. Sullivan Rd. • Spokane Valley, WA 99216
Phone 509-893-2617 • Fax 509-926-0227

Traffic ☐ Planning ☐ Survey ☐ Structural ☑ Landscape ☐ Civil ☐

NAME OF PROJECT			SHEET NUMBER
LEGACY VILLAS			OF
COMPUTED BY	CHECKED BY	JOB NUMBER	DATE
JDK	CAP	16-1624	6-13-16

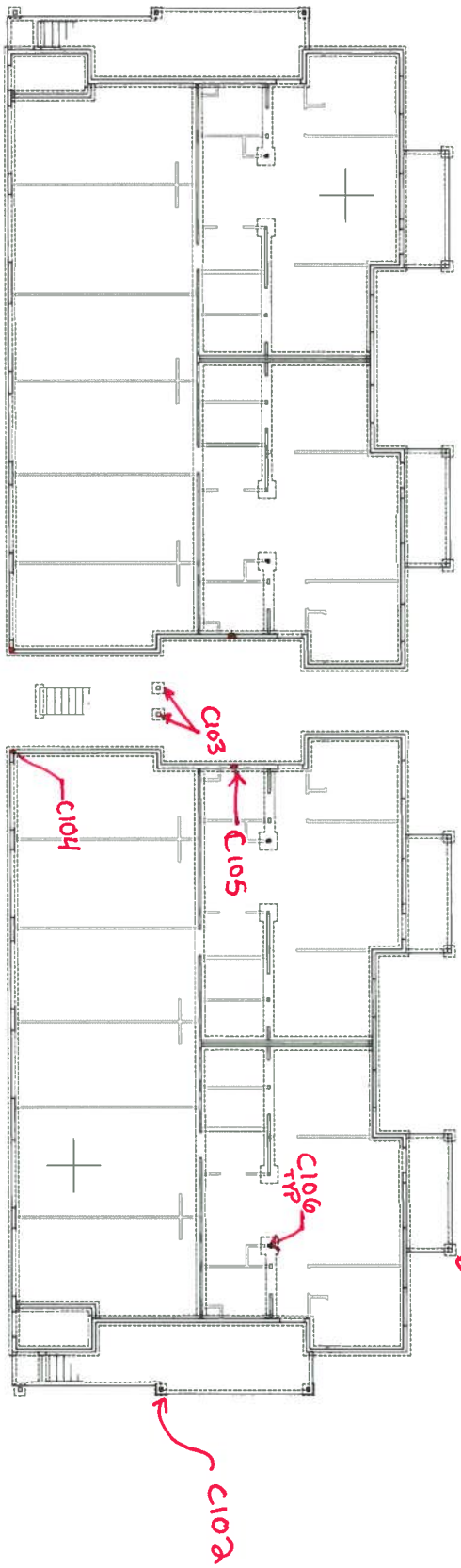

Column Key

Whipple Consulting Engineers
2528 N Sullivan Rd
Spokane Valley, WA 99216

Project Title:
Engineer:
Project Descr:

Project ID:

Wood Column

File = P:\WCE_WORK\242IDK~9\2MHZA9~D\DBJGBY~H\SEV10W~K\C7A4YC~F\1CFED0~A.EC6
ENERCALC, INC. 1983-2016, Build:6.16.6.7, Ver:6.16.6.7

Lic. # : KW-06009199 — Licensee : Whipple Consulting Engineers

Description : C101 (Typical Deck Column)

Code References

Calculations per 2012 NDS, IBC 2012, CBC 2013, ASCE 7-10
Load Combinations Used : IBC 2012

General Information

Analysis Method :	Allowable Stress Design
End Fixities	Top & Bottom Pinned
Overall Column Height	10.0 ft
(Used for non-slender calculations)	
Wood Species	GluLam Column, Species: DF
Wood Grade	1.6 L2, >= 3 Laminations

Fb - Tension	1600 psi	Fv	230 psi
Fb - Compr	1700 psi	Ft	1250 psi
Fc - Prll	1600 psi	Density	0 pcf
Fc - Perp	560 psi		

E : Modulus of Elasticity . . .	x-x Bending	y-y Bending	Axial
Basic	1600	1600	1600 ksi
Minimum	850	850	

Wood Section Name	**5.125x6**
Wood Grading/Manuf.	Western
Wood Member Type	GLB

Exact Width	**5.125** in	Allow Stress Modification Factors	
Exact Depth	**6.0** in	Cf or Cv for Bending	1.0
Area	30.750 in^2	Cf or Cv for Compression	1.0
Ix	92.250 in^4	Cf or Cv for Tension	1.0
Iy	67.306 in^4	Cm : Wet Use Factor	1.0
		Ct : Temperature Factor	1.0
		Cfu : Flat Use Factor	1.0
		Kf : Built-up columns	1.0 *NDS 15.3.2*
		Use Cr : Repetitive ?	No

Brace condition for deflection (buckling) along columns :
X-X (width) axis : Unbraced Length for X-X Axis buckling = 10.0 ft, K = 1.0
Y-Y (depth) axis : Unbraced Length for X-X Axis buckling = 10.0 ft, K = 1.0

Applied Loads

Service loads entered. Load Factors will be applied for calculations.

Column self weight included : 0.0 lbs * Dead Load Factor
AXIAL LOADS . . .
Roof (B401): Axial Load at 10.0 ft, D = 0.40, S = 1.030 k
Deck (B301): Axial Load at 10.0 ft, D = 1.170, L = 0.880 k

DESIGN SUMMARY

Bending & Shear Check Results

PASS	Max. Axial+Bending Stress Ratio =	**0.08819 : 1**
	Load Combination	+D+0.750L+0.750S+H
	Governing NDS Forumla	Comp Only, fc/Fc'
	Location of max.above base	0.0 ft
	At maximum location values are . . .	
	Applied Axial	3.003 k
	Applied Mx	0.0 k-ft
	Applied My	0.0 k-ft
	Fc : Allowable	1,107.16 psi
PASS	Maximum Shear Stress Ratio =	**0.0 : 1**
	Load Combination	+0.60D+0.70E+0.60H
	Location of max.above base	10.0 ft
	Applied Design Shear	0.0 psi
	Allowable Shear	368.0 psi

Maximum SERVICE Lateral Load Reactions . .

Top along Y-Y	0.0 k	Bottom along Y-Y	0.0 k
Top along X-X	0.0 k	Bottom along X-X	0.0 k

Maximum SERVICE Load Lateral Deflections . . .

Along Y-Y 0.0 in at 0.0 ft above base
for load combination : n/a
Along X-X 0.0 in at 0.0 ft above base
for load combination : n/a

Other Factors used to calculate allowable stresses . . .

	Bending	Compression	Tension

Load Combination Results

Load Combination	C_D	C_P	Maximum Axial + Bending Stress Ratios: Stress Ratio	Status	Location	Maximum Shear Ratios: Stress Ratio	Status	Location
+D+H	0.900	0.711	0.04990	PASS	0.0 ft	0.0	PASS	10.0 ft
+D+L+H	1.000	0.665	0.07491	PASS	0.0 ft	0.0	PASS	10.0 ft
+D+Lr+H	1.250	0.564	0.04525	PASS	0.0 ft	0.0	PASS	10.0 ft
+D+S+H	1.150	0.602	0.07637	PASS	0.0 ft	0.0	PASS	10.0 ft
+D+0.750Lr+0.750L+H	1.250	0.564	0.06427	PASS	0.0 ft	0.0	PASS	10.0 ft
+D+0.750L+0.750S+H	1.150	0.602	0.08819	PASS	0.0 ft	0.0	PASS	10.0 ft
+D+0.60W+H	1.600	0.459	0.04346	PASS	0.0 ft	0.0	PASS	10.0 ft
+D+0.70E+H	1.600	0.459	0.04346	PASS	0.0 ft	0.0	PASS	10.0 ft
+D+0.750Lr+0.750L+0.450W+H	1.600	0.459	0.06173	PASS	0.0 ft	0.0	PASS	10.0 ft
+D+0.750L+0.750S+0.450W+H	1.600	0.459	0.08311	PASS	0.0 ft	0.0	PASS	10.0 ft
+D+0.750L+0.750S+0.5250E+H	1.600	0.459	0.08311	PASS	0.0 ft	0.0	PASS	10.0 ft

Whipple Consulting Engineers
2528 N Sullivan Rd
Spokane Valley, WA 99216

Project Title:
Engineer:
Project Descr:

Project ID:

Wood Column

File = P:\WCE_WORK\242IDK~9\2MHZA9~D\DBJGBY~H\SEV10W~K\C7A4YC~F\1CFED0~A.EC6
ENERCALC, INC. 1983-2016, Build:6.16.6.7, Ver:6.16.6.7

Lic. # : KW-06009199

Licensee : Whipple Consulting Engineers

Description : C101 (Typical Deck Column)

Load Combination Results

Load Combination	C_D	C_P	Maximum Axial + Bending Stress Ratios: Stress Ratio	Status	Location	Maximum Shear Ratios: Stress Ratio	Status	Location
+0.60D+0.60W+0.60H	1.600	0.459	0.02608	PASS	0.0 ft	0.0	PASS	10.0 ft
+0.60D+0.70E+0.60H	1.600	0.459	0.02608	PASS	0.0 ft	0.0	PASS	10.0 ft

Maximum Reactions

Note: Only non-zero reactions are listed.

Load Combination	X-X Axis Reaction @ Base	X-X Axis Reaction @ Top	Y-Y Axis Reaction @ Base	Y-Y Axis Reaction @ Top	Axial Reaction @ Base
+D+H	k	k	k	k	1.570 k
+D+L+H	k	k	k	k	2.450 k
+D+Lr+H	k	k	k	k	1.570 k
+D+S+H	k	k	k	k	2.600 k
+D+0.750Lr+0.750L+H	k	k	k	k	2.230 k
+D+0.750L+0.750S+H	k	k	k	k	3.003 k
+D+0.60W+H	k	k	k	k	1.570 k
+D+0.70E+H	k	k	k	k	1.570 k
+D+0.750Lr+0.750L+0.450W+H	k	k	k	k	2.230 k
+D+0.750L+0.750S+0.450W+H	k	k	k	k	3.003 k
+D+0.750L+0.750S+0.5250E+H	k	k	k	k	3.003 k
+0.60D+0.60W+0.60H	k	k	k	k	0.942 k
+0.60D+0.70E+0.60H	k	k	k	k	0.942 k
D Only	k	k	k	k	1.570 k
Lr Only	k	k	k	k	k
L Only	k	k	k	k	0.880 k
S Only	k	k	k	k	1.030 k
W Only	k	k	k	k	k
E Only	k	k	k	k	k
H Only	k	k	k	k	k

Maximum Deflections for Load Combinations

Load Combination	Max. X-X Deflection	Distance	Max. Y-Y Deflection	Distance
+D+H	0.0000 in	0.000 ft	0.000 in	0.000 ft
+D+L+H	0.0000 in	0.000 ft	0.000 in	0.000 ft
+D+Lr+H	0.0000 in	0.000 ft	0.000 in	0.000 ft
+D+S+H	0.0000 in	0.000 ft	0.000 in	0.000 ft
+D+0.750Lr+0.750L+H	0.0000 in	0.000 ft	0.000 in	0.000 ft
+D+0.750L+0.750S+H	0.0000 in	0.000 ft	0.000 in	0.000 ft
+D+0.60W+H	0.0000 in	0.000 ft	0.000 in	0.000 ft
+D+0.70E+H	0.0000 in	0.000 ft	0.000 in	0.000 ft
+D+0.750Lr+0.750L+0.450W+H	0.0000 in	0.000 ft	0.000 in	0.000 ft
+D+0.750L+0.750S+0.450W+H	0.0000 in	0.000 ft	0.000 in	0.000 ft
+D+0.750L+0.750S+0.5250E+H	0.0000 in	0.000 ft	0.000 in	0.000 ft
+0.60D+0.60W+0.60H	0.0000 in	0.000 ft	0.000 in	0.000 ft
+0.60D+0.70E+0.60H	0.0000 in	0.000 ft	0.000 in	0.000 ft
D Only	0.0000 in	0.000 ft	0.000 in	0.000 ft
Lr Only	0.0000 in	0.000 ft	0.000 in	0.000 ft
L Only	0.0000 in	0.000 ft	0.000 in	0.000 ft
S Only	0.0000 in	0.000 ft	0.000 in	0.000 ft
W Only	0.0000 in	0.000 ft	0.000 in	0.000 ft
E Only	0.0000 in	0.000 ft	0.000 in	0.000 ft
H Only	0.0000 in	0.000 ft	0.000 in	0.000 ft

Whipple Consulting Engineers
2528 N Sullivan Rd
Spokane Valley, WA 99216

Project Title:
Engineer:
Project Descr:

Project ID:

Wood Column

File = P:\WCE_WORK\242IDK~9\2MHZA9~D\DBJGBY~H\SEV10W~K\C7A4YC~F\1CFED0~A.EC6
ENERCALC, INC. 1983-2016, Build:6.16.6.7, Ver:6.16.6.7

Lic. # : KW-06009199

Licensee : Whipple Consulting Engineers

Description : C101 (Typical Deck Column)

Sketches

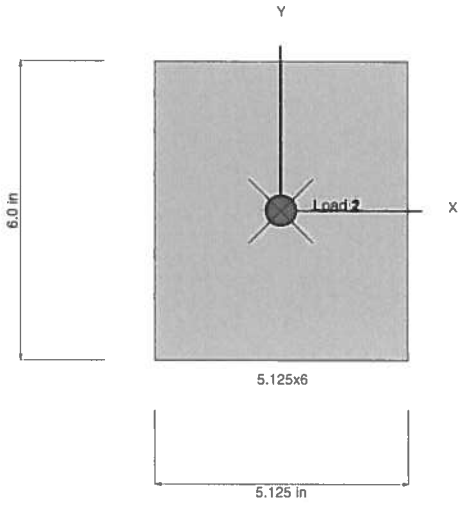

Loads are total entered value. Arrows do not reflect absolute direction.

Whipple Consulting Engineers
2528 N Sullivan Rd
Spokane Valley, WA 99216

Project Title:
Engineer:
Project Descr:

Project ID:

Wood Column

File = P:\WCE_WORK\242IDK~9\2MHZA9~D\DBJGBY~H\SEV10W~K\C7A4YC~F\1CFED0~A.EC6
ENERCALC, INC. 1983-2016, Build:6.16.6.7, Ver:6.16.6.7

Lic. # : KW-06009199 — Licensee : Whipple Consulting Engineers

Description : C102 (Side Entryway Column)

Code References

Calculations per 2012 NDS, IBC 2012, CBC 2013, ASCE 7-10
Load Combinations Used : IBC 2012

General Information

Analysis Method : Allowable Stress Design
End Fixities : Top & Bottom Pinned
Overall Column Height : 10.0 ft
(Used for non-slender calculations)

Wood Species : GluLam Column, Species: DF
Wood Grade : 1.6 L2, >= 3 Laminations

Fb - Tension	1,600.0 psi	Fv	230.0 psi
Fb - Compr	1,700.0 psi	Ft	1,250.0 psi
Fc - Prll	1,600.0 psi	Density	0.0 pcf
Fc - Perp	560.0 psi		

E : Modulus of Elasticity . . .	x-x Bending	y-y Bending	Axial
Basic	1,600.0	1,600.0	1,600.0 ksi
Minimum	850.0	850.0	

Wood Section Name : 5.125x6
Wood Grading/Manuf. : Western
Wood Member Type : GLB

Exact Width	5.125	in
Exact Depth	6.0	in
Area	30.75	in^2
Ix	92.25	in^4
Iy	67.306	in^4

Allow Stress Modification Factors

Cf or Cv for Bending	1.0
Cf or Cv for Compression	1.0
Cf or Cv for Tension	1.0
Cm : Wet Use Factor	1.0
Ct : Temperature Factor	1.0
Cfu : Flat Use Factor	1.0
Kf : Built-up columns	1.0 *NDS 15.3.2*
Use Cr : Repetitive ?	No

Brace condition for deflection (buckling) along columns :
X-X (width) axis : Unbraced Length for X-X Axis buckling = 10.0 ft, K = 1.0
Y-Y (depth) axis : Unbraced Length for X-X Axis buckling = 10.0 ft, K = 1.0

Applied Loads

Service loads entered. Load Factors will be applied for calculations.

Column self weight included : 0.0 lbs * Dead Load Factor
AXIAL LOADS . . .
B306: Axial Load at 10.0 ft, D = 1.179, L = 2.238 k
B303: Axial Load at 10.0 ft, D = 0.750, L = 1.380 k

DESIGN SUMMARY

Bending & Shear Check Results

PASS Max. Axial+Bending Stress Ratio = **0.1696 : 1**

Load Combination	+D+L+H
Governing NDS Forumla	Comp Only, fc/Fc'
Location of max.above base	0.0 ft
At maximum location values are . . .	
Applied Axial	5.547 k
Applied Mx	0.0 k-ft
Applied My	0.0 k-ft
Fc : Allowable	1,063.56 psi

PASS Maximum Shear Stress Ratio = **0.0 : 1**

Load Combination	+0.60D+0.70E+0.60H
Location of max.above base	10.0 ft
Applied Design Shear	0.0 psi
Allowable Shear	368.0 psi

Maximum SERVICE Lateral Load Reactions . .

Top along Y-Y	0.0 k	Bottom along Y-Y	0.0 k
Top along X-X	0.0 k	Bottom along X-X	0.0 k

Maximum SERVICE Load Lateral Deflections . . .

Along Y-Y : 0.0 in at 0.0 ft above base
for load combination : n/a

Along X-X : 0.0 in at 0.0 ft above base
for load combination : n/a

Other Factors used to calculate allowable stresses . . .

	Bending	Compression	Tension

Load Combination Results

Load Combination	C_D	C_P	Maximum Axial + Bending Stress Ratios: Stress Ratio	Status	Location	Maximum Shear Ratios: Stress Ratio	Status	Location
+D+H	0.900	0.711	0.06131	PASS	0.0 ft	0.0	PASS	10.0 ft
+D+L+H	1.000	0.665	0.1696	PASS	0.0 ft	0.0	PASS	10.0 ft
+D+Lr+H	1.250	0.564	0.05560	PASS	0.0 ft	0.0	PASS	10.0 ft
+D+S+H	1.150	0.602	0.05666	PASS	0.0 ft	0.0	PASS	10.0 ft
+D+0.750Lr+0.750L+H	1.250	0.564	0.1338	PASS	0.0 ft	0.0	PASS	10.0 ft
+D+0.750L+0.750S+H	1.150	0.602	0.1364	PASS	0.0 ft	0.0	PASS	10.0 ft
+D+0.60W+H	1.600	0.459	0.05340	PASS	0.0 ft	0.0	PASS	10.0 ft
+D+0.70E+H	1.600	0.459	0.05340	PASS	0.0 ft	0.0	PASS	10.0 ft
+D+0.750Lr+0.750L+0.450W+H	1.600	0.459	0.1285	PASS	0.0 ft	0.0	PASS	10.0 ft
+D+0.750L+0.750S+0.450W+H	1.600	0.459	0.1285	PASS	0.0 ft	0.0	PASS	10.0 ft
+D+0.750L+0.750S+0.5250E+H	1.600	0.459	0.1285	PASS	0.0 ft	0.0	PASS	10.0 ft

Whipple Consulting Engineers
2528 N Sullivan Rd
Spokane Valley, WA 99216

Project Title:
Engineer:
Project Descr:

Project ID:

Wood Column

File = P:\WCE_WORK\242IDK~9\2MHZA9~D\DBJGBY~H\SEV10W~K\C7A4YC~F\1CFED0~A.EC6
ENERCALC, INC. 1983-2016, Build:6.16.6.7, Ver:6.16.6.7

Lic. # : KW-06009199

Licensee : Whipple Consulting Engineers

Description : C102 (Side Entryway Column)

Load Combination Results

Load Combination	C_D	C_P	Maximum Axial + Bending Stress Ratios: Stress Ratio	Status	Location	Maximum Shear Ratios: Stress Ratio	Status	Location
+0.60D+0.60W+0.60H	1.600	0.459	0.03204	PASS	0.0 ft	0.0	PASS	10.0 ft
+0.60D+0.70E+0.60H	1.600	0.459	0.03204	PASS	0.0 ft	0.0	PASS	10.0 ft

Maximum Reactions

Note: Only non-zero reactions are listed.

Load Combination	X-X Axis Reaction @ Base	X-X Axis Reaction @ Top	Y-Y Axis Reaction @ Base	Y-Y Axis Reaction @ Top	Axial Reaction @ Base
+D+H		k		k	1.929 k
+D+L+H		k		k	5.547 k
+D+Lr+H		k		k	1.929 k
+D+S+H		k		k	1.929 k
+D+0.750Lr+0.750L+H		k		k	4.643 k
+D+0.750L+0.750S+H		k		k	4.643 k
+D+0.60W+H		k		k	1.929 k
+D+0.70E+H		k		k	1.929 k
+D+0.750Lr+0.750L+0.450W+H		k		k	4.643 k
+D+0.750L+0.750S+0.450W+H		k		k	4.643 k
+D+0.750L+0.750S+0.5250E+H		k		k	4.643 k
+0.60D+0.60W+0.60H		k		k	1.157 k
+0.60D+0.70E+0.60H		k		k	1.157 k
D Only		k		k	1.929 k
Lr Only		k		k	k
L Only		k		k	3.618 k
S Only		k		k	k
W Only		k		k	k
E Only		k		k	k
H Only		k		k	k

Maximum Deflections for Load Combinations

Load Combination	Max. X-X Deflection	Distance	Max. Y-Y Deflection	Distance
+D+H	0.0000 in	0.000 ft	0.000 in	0.000 ft
+D+L+H	0.0000 in	0.000 ft	0.000 in	0.000 ft
+D+Lr+H	0.0000 in	0.000 ft	0.000 in	0.000 ft
+D+S+H	0.0000 in	0.000 ft	0.000 in	0.000 ft
+D+0.750Lr+0.750L+H	0.0000 in	0.000 ft	0.000 in	0.000 ft
+D+0.750L+0.750S+H	0.0000 in	0.000 ft	0.000 in	0.000 ft
+D+0.60W+H	0.0000 in	0.000 ft	0.000 in	0.000 ft
+D+0.70E+H	0.0000 in	0.000 ft	0.000 in	0.000 ft
+D+0.750Lr+0.750L+0.450W+H	0.0000 in	0.000 ft	0.000 in	0.000 ft
+D+0.750L+0.750S+0.450W+H	0.0000 in	0.000 ft	0.000 in	0.000 ft
+D+0.750L+0.750S+0.5250E+H	0.0000 in	0.000 ft	0.000 in	0.000 ft
+0.60D+0.60W+0.60H	0.0000 in	0.000 ft	0.000 in	0.000 ft
+0.60D+0.70E+0.60H	0.0000 in	0.000 ft	0.000 in	0.000 ft
D Only	0.0000 in	0.000 ft	0.000 in	0.000 ft
Lr Only	0.0000 in	0.000 ft	0.000 in	0.000 ft
L Only	0.0000 in	0.000 ft	0.000 in	0.000 ft
S Only	0.0000 in	0.000 ft	0.000 in	0.000 ft
W Only	0.0000 in	0.000 ft	0.000 in	0.000 ft
E Only	0.0000 in	0.000 ft	0.000 in	0.000 ft
H Only	0.0000 in	0.000 ft	0.000 in	0.000 ft

Whipple Consulting Engineers
2528 N Sullivan Rd
Spokane Valley, WA 99216

Project Title:
Engineer:
Project Descr:

Project ID:

Wood Column

File = P:\WCE_WORK\242IDK~9\2MHZA9~D\DBJGBY~H\SEV10W~K\C7A4YC~F\1CFED0~A.EC6
ENERCALC, INC. 1983-2016, Build:6.16.6.7, Ver:6.16.6.7

Lic. # : KW-06009199

Licensee : Whipple Consulting Engineers

Description : C102 (Side Entryway Column)

Sketches

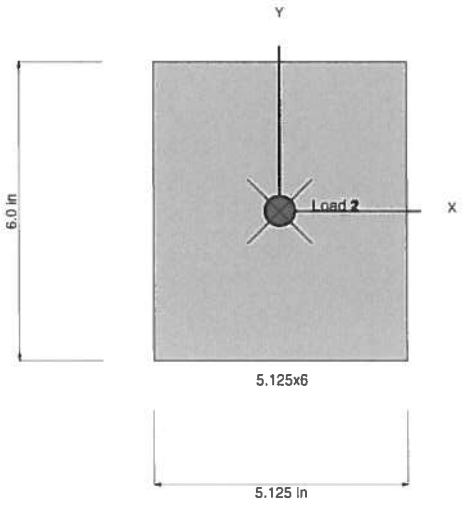

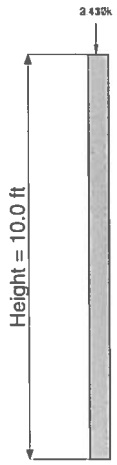

Loads are total entered value. Arrows do not reflect absolute direction.

Whipple Consulting Engineers
2528 N Sullivan Rd
Spokane Valley, WA 99216

Project Title:
Engineer:
Project Descr:

Project ID:

Wood Column

File = P:\WCE_WORK\242IDK~9\2MHZA9~D\DBJGBY~H\SEV10W~K\C7A4YC~F\1CFED0~A.EC6
ENERCALC, INC. 1983-2016, Build:6.16.6.7, Ver:6.16.6.7

Lic. # : KW-06009199 — Licensee : Whipple Consulting Engineers

Description : C103 (Common Entry Way)

Code References

Calculations per 2012 NDS, IBC 2012, CBC 2013, ASCE 7-10
Load Combinations Used : IBC 2012

General Information

Analysis Method : Allowable Stress Design
End Fixities : Top & Bottom Pinned
Overall Column Height : 10.0 ft
(Used for non-slender calculations)

Wood Species : GluLam Column, Species: DF
Wood Grade : 1.6 L2, >= 3 Laminations

Fb - Tension	1,600.0 psi	Fv	230.0 psi
Fb - Compr	1,700.0 psi	Ft	1,250.0 psi
Fc - Prll	1,600.0 psi	Density	0.0 pcf
Fc - Perp	560.0 psi		

E : Modulus of Elasticity . . .	x-x Bending	y-y Bending	Axial
Basic	1,600.0	1,600.0	1,600.0 ksi
Minimum	850.0	850.0	

Wood Section Name : **5.125x6**
Wood Grading/Manuf. : Western
Wood Member Type : GLB

Exact Width	**5.125**	in
Exact Depth	**6.0**	in
Area	30.75	in^2
Ix	92.25	in^4
Iy	67.306	in^4

Allow Stress Modification Factors

Cf or Cv for Bending	1.0
Cf or Cv for Compression	1.0
Cf or Cv for Tension	1.0
Cm : Wet Use Factor	1.0
Ct : Temperature Factor	1.0
Cfu : Flat Use Factor	1.0
Kf : Built-up columns	1.0 *NDS 15.3.2*
Use Cr : Repetitive ?	No

Brace condition for deflection (buckling) along columns :
X-X (width) axis : Unbraced Length for X-X Axis buckling = 10.0 ft, K = 1.0
Y-Y (depth) axis : Unbraced Length for X-X Axis buckling = 10.0 ft, K = 1.0

Applied Loads

Service loads entered. Load Factors will be applied for calculations.

Column self weight included : 0.0 lbs * Dead Load Factor
AXIAL LOADS . . .
B305: Axial Load at 10.0 ft, D = 2.230, L = 5.730 k

DESIGN SUMMARY

Bending & Shear Check Results

PASS Max. Axial+Bending Stress Ratio = **0.2434 : 1**

Load Combination	+D+L+H
Governing NDS Forumla	Comp Only, fc/Fc'
Location of max.above base	0.0 ft
At maximum location values are . . .	
Applied Axial	7.960 k
Applied Mx	0.0 k-ft
Applied My	0.0 k-ft
Fc : Allowable	1,063.56 psi

PASS Maximum Shear Stress Ratio = **0.0 : 1**

Load Combination	+0.60D+0.70E+0.60H
Location of max.above base	10.0 ft
Applied Design Shear	0.0 psi
Allowable Shear	368.0 psi

Maximum SERVICE Lateral Load Reactions . .

Top along Y-Y	0.0 k	Bottom along Y-Y	0.0 k
Top along X-X	0.0 k	Bottom along X-X	0.0 k

Maximum SERVICE Load Lateral Deflections . . .

Along Y-Y 0.0 in at 0.0 ft above base
for load combination : n/a

Along X-X 0.0 in at 0.0 ft above base
for load combination : n/a

Other Factors used to calculate allowable stresses . . .

	Bending	Compression	Tension

Load Combination Results

Load Combination	C_D	C_P	Maximum Axial + Bending Stress Ratios: Stress Ratio	Status	Location	Maximum Shear Ratios: Stress Ratio	Status	Location
+D+H	0.900	0.711	0.07088	PASS	0.0 ft	0.0	PASS	10.0 ft
+D+L+H	1.000	0.665	0.2434	PASS	0.0 ft	0.0	PASS	10.0 ft
+D+Lr+H	1.250	0.564	0.06427	PASS	0.0 ft	0.0	PASS	10.0 ft
+D+S+H	1.150	0.602	0.06550	PASS	0.0 ft	0.0	PASS	10.0 ft
+D+0.750Lr+0.750L+H	1.250	0.564	0.1881	PASS	0.0 ft	0.0	PASS	10.0 ft
+D+0.750L+0.750S+H	1.150	0.602	0.1917	PASS	0.0 ft	0.0	PASS	10.0 ft
+D+0.60W+H	1.600	0.459	0.06173	PASS	0.0 ft	0.0	PASS	10.0 ft
+D+0.70E+H	1.600	0.459	0.06173	PASS	0.0 ft	0.0	PASS	10.0 ft
+D+0.750Lr+0.750L+0.450W+H	1.600	0.459	0.1807	PASS	0.0 ft	0.0	PASS	10.0 ft
+D+0.750L+0.750S+0.450W+H	1.600	0.459	0.1807	PASS	0.0 ft	0.0	PASS	10.0 ft
+D+0.750L+0.750S+0.5250E+H	1.600	0.459	0.1807	PASS	0.0 ft	0.0	PASS	10.0 ft
+0.60D+0.60W+0.60H	1.600	0.459	0.03704	PASS	0.0 ft	0.0	PASS	10.0 ft

Whipple Consulting Engineers
2528 N Sullivan Rd
Spokane Valley, WA 99216

Project Title:
Engineer:
Project Descr:

Project ID:

Wood Column

File = P:\WCE_WORK\242IDK~9\2MHZA9~D\DBJGBY~H\SEV10W~K\C7A4YC~F\1CFED0~A.EC6
ENERCALC, INC. 1983-2016, Build:6.16.6.7, Ver:6.16.6.7

Lic. # : KW-06009199

Licensee : Whipple Consulting Engineers

Description : C103 (Common Entry Way)

Load Combination Results

Load Combination	C_D	C_P	Maximum Axial + Bending Stress Ratios: Stress Ratio	Status	Location	Maximum Shear Ratios: Stress Ratio	Status	Location
+0.60D+0.70E+0.60H	1.600	0.459	0.03704	PASS	0.0 ft	0.0	PASS	10.0 ft

Maximum Reactions

Note: Only non-zero reactions are listed.

Load Combination	X-X Axis Reaction @ Base	X-X Axis Reaction @ Top	Y-Y Axis Reaction @ Base	Y-Y Axis Reaction @ Top	Axial Reaction @ Base
+D+H		k		k	2.230 k
+D+L+H		k		k	7.960 k
+D+Lr+H		k		k	2.230 k
+D+S+H		k		k	2.230 k
+D+0.750Lr+0.750L+H		k		k	6.528 k
+D+0.750L+0.750S+H		k		k	6.528 k
+D+0.60W+H		k		k	2.230 k
+D+0.70E+H		k		k	2.230 k
+D+0.750Lr+0.750L+0.450W+H		k		k	6.528 k
+D+0.750L+0.750S+0.450W+H		k		k	6.528 k
+D+0.750L+0.750S+0.5250E+H		k		k	6.528 k
+0.60D+0.60W+0.60H		k		k	1.338 k
+0.60D+0.70E+0.60H		k		k	1.338 k
D Only		k		k	2.230 k
Lr Only		k		k	k
L Only		k		k	5.730 k
S Only		k		k	k
W Only		k		k	k
E Only		k		k	k
H Only		k		k	k

Maximum Deflections for Load Combinations

Load Combination	Max. X-X Deflection	Distance	Max. Y-Y Deflection	Distance
+D+H	0.0000 in	0.000 ft	0.000 in	0.000 ft
+D+L+H	0.0000 in	0.000 ft	0.000 in	0.000 ft
+D+Lr+H	0.0000 in	0.000 ft	0.000 in	0.000 ft
+D+S+H	0.0000 in	0.000 ft	0.000 in	0.000 ft
+D+0.750Lr+0.750L+H	0.0000 in	0.000 ft	0.000 in	0.000 ft
+D+0.750L+0.750S+H	0.0000 in	0.000 ft	0.000 in	0.000 ft
+D+0.60W+H	0.0000 in	0.000 ft	0.000 in	0.000 ft
+D+0.70E+H	0.0000 in	0.000 ft	0.000 in	0.000 ft
+D+0.750Lr+0.750L+0.450W+H	0.0000 in	0.000 ft	0.000 in	0.000 ft
+D+0.750L+0.750S+0.450W+H	0.0000 in	0.000 ft	0.000 in	0.000 ft
+D+0.750L+0.750S+0.5250E+H	0.0000 in	0.000 ft	0.000 in	0.000 ft
+0.60D+0.60W+0.60H	0.0000 in	0.000 ft	0.000 in	0.000 ft
+0.60D+0.70E+0.60H	0.0000 in	0.000 ft	0.000 in	0.000 ft
D Only	0.0000 in	0.000 ft	0.000 in	0.000 ft
Lr Only	0.0000 in	0.000 ft	0.000 in	0.000 ft
L Only	0.0000 in	0.000 ft	0.000 in	0.000 ft
S Only	0.0000 in	0.000 ft	0.000 in	0.000 ft
W Only	0.0000 in	0.000 ft	0.000 in	0.000 ft
E Only	0.0000 in	0.000 ft	0.000 in	0.000 ft
H Only	0.0000 in	0.000 ft	0.000 in	0.000 ft

Whipple Consulting Engineers
2528 N Sullivan Rd
Spokane Valley, WA 99216

Project Title:
Engineer:
Project Descr:

Project ID:

Wood Column

File = P:\WCE_WORK\242IDK~9\2MHZA9~D\DBJGBY~H\SEV10W~K\C7A4YC~F\1CFED0~A.EC6
ENERCALC, INC. 1983-2016, Build:6.16.6.7, Ver:6.16.6.7

Lic. # : KW-06009199

Licensee : Whipple Consulting Engineers

Description : C103 (Common Entry Way)

Sketches

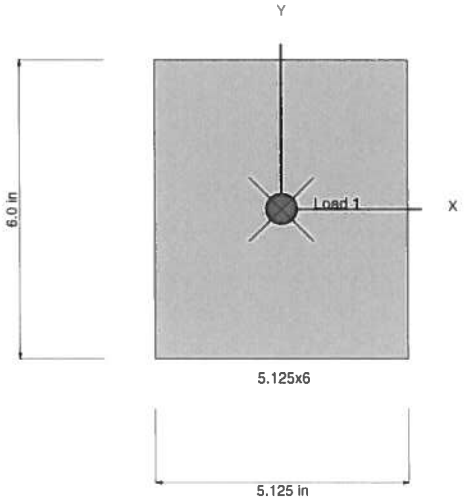

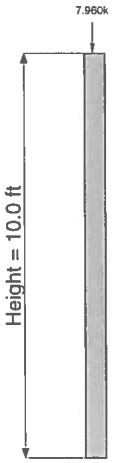

Loads are total entered value. Arrows do not reflect absolute direction.

Whipple Consulting Engineers
2528 N Sullivan Rd
Spokane Valley, WA 99216

Project Title:
Engineer:
Project Descr:
Project ID:

Wood Column

File = P:\WCE_WORK\242IDK~9\2MHZA9~D\DBJGBY~H\SEV10W~K\C7A4YC~F\1CFED0~A.EC6
ENERCALC, INC. 1983-2016, Build:6.16.6.7, Ver:6.16.6.7

Lic. # : KW-06009199 — Licensee : Whipple Consulting Engineers

Description : C104 (Bundled Studs under B403)

Code References

Calculations per 2012 NDS, IBC 2012, CBC 2013, ASCE 7-10
Load Combinations Used : IBC 2012

General Information

Analysis Method : Allowable Stress Design
End Fixities : Top & Bottom Pinned
Overall Column Height : 10.0 ft
(Used for non-slender calculations)

Wood Species : Douglas Fir - Larch
Wood Grade : No.2

Fb - Tension	900.0 psi	Fv	180.0 psi
Fb - Compr	900.0 psi	Ft	575.0 psi
Fc - Prll	1,350.0 psi	Density	31.20 pcf
Fc - Perp	625.0 psi		

E : Modulus of Elasticity . . .	x-x Bending	y-y Bending	Axial
Basic	1,600.0	1,600.0	1,600.0 ksi
Minimum	580.0	580.0	

Wood Section Name : **3-2x6**
Wood Grading/Manuf. : Graded Lumber
Wood Member Type : Sawn

Exact Width	**4.50**	in
Exact Depth	**5.50**	in
Area	24.750	in^2
Ix	62.391	in^4
Iy	41.766	in^4

Allow Stress Modification Factors

Cf or Cv for Bending	1.30
Cf or Cv for Compression	1.10
Cf or Cv for Tension	1.30
Cm : Wet Use Factor	1.0
Ct : Temperature Factor	1.0
Cfu : Flat Use Factor	1.0
Kf : Built-up columns	1.0 *NDS 15.3.2*
Use Cr : Repetitive ?	No

Brace condition for deflection (buckling) along columns :
X-X (width) axis : Fully braced against buckling along X-X Axis
Y-Y (depth) axis : Unbraced Length for X-X Axis buckling = 10.0 ft, K = 1.0

Applied Loads

Service loads entered. Load Factors will be applied for calculations.

Column self weight included : 53.625 lbs * Dead Load Factor
AXIAL LOADS . . .
B403: Axial Load at 10.0 ft, D = 2.230, L = 5.730 k

DESIGN SUMMARY

Bending & Shear Check Results

PASS Max. Axial+Bending Stress Ratio = **0.4005 : 1**

Load Combination	+D+L+H
Governing NDS Forumla	Comp Only, fc/Fc'
Location of max.above base	0.0 ft
At maximum location values are . . .	
Applied Axial	8.014 k
Applied Mx	0.0 k-ft
Applied My	0.0 k-ft
Fc : Allowable	808.37 psi

PASS Maximum Shear Stress Ratio = **0.0 : 1**

Load Combination	+0.60D+0.70E+0.60H
Location of max.above base	10.0 ft
Applied Design Shear	0.0 psi
Allowable Shear	288.0 psi

Maximum SERVICE Lateral Load Reactions . .

Top along Y-Y	0.0 k	Bottom along Y-Y	0.0 k
Top along X-X	0.0 k	Bottom along X-X	0.0 k

Maximum SERVICE Load Lateral Deflections . . .

Along Y-Y 0.0 in at 0.0 ft above base
for load combination : n/a

Along X-X 0.0 in at 0.0 ft above base
for load combination : n/a

Other Factors used to calculate allowable stresses . . .

	Bending	Compression	Tension

Load Combination Results

Load Combination	C_D	C_P	Maximum Axial + Bending Stress Ratios: Stress Ratio	Status	Location	Maximum Shear Ratios: Stress Ratio	Status	Location
+D+H	0.900	0.585	0.1181	PASS	0.0 ft	0.0	PASS	10.0 ft
+D+L+H	1.000	0.544	0.4005	PASS	0.0 ft	0.0	PASS	10.0 ft
+D+Lr+H	1.250	0.461	0.1079	PASS	0.0 ft	0.0	PASS	10.0 ft
+D+S+H	1.150	0.491	0.1099	PASS	0.0 ft	0.0	PASS	10.0 ft
+D+0.750Lr+0.750L+H	1.250	0.461	0.3109	PASS	0.0 ft	0.0	PASS	10.0 ft
+D+0.750L+0.750S+H	1.150	0.491	0.3168	PASS	0.0 ft	0.0	PASS	10.0 ft
+D+0.60W+H	1.600	0.376	0.1032	PASS	0.0 ft	0.0	PASS	10.0 ft
+D+0.70E+H	1.600	0.376	0.1032	PASS	0.0 ft	0.0	PASS	10.0 ft
+D+0.750Lr+0.750L+0.450W+H	1.600	0.376	0.2975	PASS	0.0 ft	0.0	PASS	10.0 ft
+D+0.750L+0.750S+0.450W+H	1.600	0.376	0.2975	PASS	0.0 ft	0.0	PASS	10.0 ft
+D+0.750L+0.750S+0.5250E+H	1.600	0.376	0.2975	PASS	0.0 ft	0.0	PASS	10.0 ft
+0.60D+0.60W+0.60H	1.600	0.376	0.06194	PASS	0.0 ft	0.0	PASS	10.0 ft

Whipple Consulting Engineers
2528 N Sullivan Rd
Spokane Valley, WA 99216

Project Title:
Engineer:
Project Descr:

Project ID:

Wood Column

File = P:\WCE_WORK\242IDK~9\2MHZA9~D\DBJGBY~H\SEV10W~K\C7A4YC~F\1CFED0~A.EC6
ENERCALC, INC. 1983-2016, Build:6.16.6.7, Ver:6.16.6.7

Lic. # : KW-06009199

Licensee : Whipple Consulting Engineers

Description : C104 (Bundled Studs under B403)

Load Combination Results

Load Combination	C_D	C_P	Maximum Axial + Bending Stress Ratios: Stress Ratio	Status	Location	Maximum Shear Ratios: Stress Ratio	Status	Location
+0.60D+0.70E+0.60H	1.600	0.376	0.06194	PASS	0.0 ft	0.0	PASS	10.0 ft

Maximum Reactions

Note: Only non-zero reactions are listed.

Load Combination	X-X Axis Reaction @ Base	X-X Axis Reaction @ Top	Y-Y Axis Reaction @ Base	Y-Y Axis Reaction @ Top	Axial Reaction @ Base
+D+H		k		k	2.284 k
+D+L+H		k		k	8.014 k
+D+Lr+H		k		k	2.284 k
+D+S+H		k		k	2.284 k
+D+0.750Lr+0.750L+H		k		k	6.581 k
+D+0.750L+0.750S+H		k		k	6.581 k
+D+0.60W+H		k		k	2.284 k
+D+0.70E+H		k		k	2.284 k
+D+0.750Lr+0.750L+0.450W+H		k		k	6.581 k
+D+0.750L+0.750S+0.450W+H		k		k	6.581 k
+D+0.750L+0.750S+0.5250E+H		k		k	6.581 k
+0.60D+0.60W+0.60H		k		k	1.370 k
+0.60D+0.70E+0.60H		k		k	1.370 k
D Only		k		k	2.284 k
Lr Only		k		k	k
L Only		k		k	5.730 k
S Only		k		k	k
W Only		k		k	k
E Only		k		k	k
H Only		k		k	k

Maximum Deflections for Load Combinations

Load Combination	Max. X-X Deflection	Distance	Max. Y-Y Deflection	Distance
+D+H	0.0000 in	0.000 ft	0.000 in	0.000 ft
+D+L+H	0.0000 in	0.000 ft	0.000 in	0.000 ft
+D+Lr+H	0.0000 in	0.000 ft	0.000 in	0.000 ft
+D+S+H	0.0000 in	0.000 ft	0.000 in	0.000 ft
+D+0.750Lr+0.750L+H	0.0000 in	0.000 ft	0.000 in	0.000 ft
+D+0.750L+0.750S+H	0.0000 in	0.000 ft	0.000 in	0.000 ft
+D+0.60W+H	0.0000 in	0.000 ft	0.000 in	0.000 ft
+D+0.70E+H	0.0000 in	0.000 ft	0.000 in	0.000 ft
+D+0.750Lr+0.750L+0.450W+H	0.0000 in	0.000 ft	0.000 in	0.000 ft
+D+0.750L+0.750S+0.450W+H	0.0000 in	0.000 ft	0.000 in	0.000 ft
+D+0.750L+0.750S+0.5250E+H	0.0000 in	0.000 ft	0.000 in	0.000 ft
+0.60D+0.60W+0.60H	0.0000 in	0.000 ft	0.000 in	0.000 ft
+0.60D+0.70E+0.60H	0.0000 in	0.000 ft	0.000 in	0.000 ft
D Only	0.0000 in	0.000 ft	0.000 in	0.000 ft
Lr Only	0.0000 in	0.000 ft	0.000 in	0.000 ft
L Only	0.0000 in	0.000 ft	0.000 in	0.000 ft
S Only	0.0000 in	0.000 ft	0.000 in	0.000 ft
W Only	0.0000 in	0.000 ft	0.000 in	0.000 ft
E Only	0.0000 in	0.000 ft	0.000 in	0.000 ft
H Only	0.0000 in	0.000 ft	0.000 in	0.000 ft

Whipple Consulting Engineers
2528 N Sullivan Rd
Spokane Valley, WA 99216

Project Title:
Engineer:
Project Descr:

Project ID:

Wood Column

File = P:\WCE_WORK\242IDK~9\2MHZA9~D\DBJGBY~H\SEV10W~K\C7A4YC~F\1CFED0~A.EC6
ENERCALC, INC. 1983-2016, Build:6.16.6.7, Ver:6.16.6.7

Lic. # : KW-06009199 — Licensee : Whipple Consulting Engineers

Description : C104 (Bundled Studs under B403)

Sketches

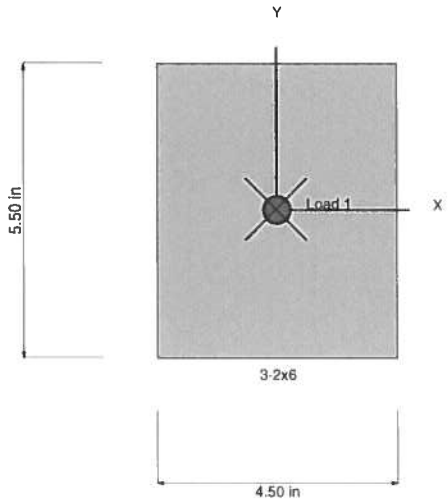

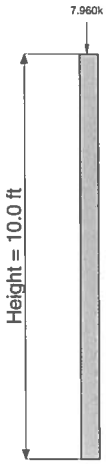

Loads are total entered value. Arrows do not reflect absolute direction.

Whipple Consulting Engineers
2528 N Sullivan Rd
Spokane Valley, WA 99216

Project Title:
Engineer:
Project Descr:
Project ID:

Wood Column

File = P:\WCE_WORK\242IDK~9\2MHZA9~D\DBJGBY~H\SEV10W~K\C7A4YC~F\1CFED0~A.EC6
ENERCALC, INC. 1983-2016, Build:6.16.6.7, Ver:6.16.6.7

Lic. # : KW-06009199 — Licensee : Whipple Consulting Engineers

Description : C105 (Bundled Studs under B305)

Code References

Calculations per 2012 NDS, IBC 2012, CBC 2013, ASCE 7-10
Load Combinations Used : IBC 2012

General Information

Analysis Method : Allowable Stress Design
End Fixities : Top & Bottom Pinned
Overall Column Height : 10.0 ft
(Used for non-slender calculations)

Wood Species : Douglas Fir - Larch
Wood Grade : No.2

Fb - Tension	900.0 psi	Fv	180.0 psi
Fb - Compr	900.0 psi	Ft	575.0 psi
Fc - Prll	1,350.0 psi	Density	31.20 pcf
Fc - Perp	625.0 psi		

E : Modulus of Elasticity . . .	x-x Bending	y-y Bending	Axial
Basic	1,600.0	1,600.0	1,600.0 ksi
Minimum	580.0	580.0	

Wood Section Name : **3-2x6**
Wood Grading/Manuf. : Graded Lumber
Wood Member Type : Sawn

Exact Width	**4.50**	in
Exact Depth	**5.50**	in
Area	24.75	in^2
Ix	62.391	in^4
Iy	41.766	in^4

Allow Stress Modification Factors

Cf or Cv for Bending	1.30
Cf or Cv for Compression	1.10
Cf or Cv for Tension	1.30
Cm : Wet Use Factor	1.0
Ct : Temperature Factor	1.0
Cfu : Flat Use Factor	1.0
Kf : Built-up columns	1.0 *NDS 15.3.2*
Use Cr : Repetitive ?	No

Brace condition for deflection (buckling) along columns :
X-X (width) axis : Fully braced against buckling along X-X Axis
Y-Y (depth) axis : Unbraced Length for X-X Axis buckling = 10.0 ft, K = 1.0

Applied Loads

Service loads entered. Load Factors will be applied for calculations.

Column self weight included : 53.625 lbs * Dead Load Factor
AXIAL LOADS . . .
B305: Axial Load at 10.0 ft, D = 4.230, L = 8.060 k

DESIGN SUMMARY

Bending & Shear Check Results

PASS Max. Axial+Bending Stress Ratio = **0.6170 : 1**

Load Combination	+D+L+H
Governing NDS Forumla	Comp Only, fc/Fc'
Location of max.above base	0.0 ft
At maximum location values are . . .	
Applied Axial	12.344 k
Applied Mx	0.0 k-ft
Applied My	0.0 k-ft
Fc : Allowable	808.37 psi

PASS Maximum Shear Stress Ratio = **0.0 : 1**

Load Combination	+0.60D+0.70E+0.60H
Location of max.above base	10.0 ft
Applied Design Shear	0.0 psi
Allowable Shear	288.0 psi

Maximum SERVICE Lateral Load Reactions . .

Top along Y-Y	0.0 k	Bottom along Y-Y	0.0 k
Top along X-X	0.0 k	Bottom along X-X	0.0 k

Maximum SERVICE Load Lateral Deflections . . .

Along Y-Y 0.0 in at 0.0 ft above base
for load combination : n/a

Along X-X 0.0 in at 0.0 ft above base
for load combination : n/a

Other Factors used to calculate allowable stresses . . .

	Bending	Compression	Tension

Load Combination Results

Load Combination	C_D	C_P	Maximum Axial + Bending Stress Ratios: Stress Ratio	Status	Location	Maximum Shear Ratios: Stress Ratio	Status	Location
+D+H	0.900	0.585	0.2215	PASS	0.0 ft	0.0	PASS	10.0 ft
+D+L+H	1.000	0.544	0.6170	PASS	0.0 ft	0.0	PASS	10.0 ft
+D+Lr+H	1.250	0.461	0.2023	PASS	0.0 ft	0.0	PASS	10.0 ft
+D+S+H	1.150	0.491	0.2062	PASS	0.0 ft	0.0	PASS	10.0 ft
+D+0.750Lr+0.750L+H	1.250	0.461	0.4879	PASS	0.0 ft	0.0	PASS	10.0 ft
+D+0.750L+0.750S+H	1.150	0.491	0.4972	PASS	0.0 ft	0.0	PASS	10.0 ft
+D+0.60W+H	1.600	0.376	0.1937	PASS	0.0 ft	0.0	PASS	10.0 ft
+D+0.70E+H	1.600	0.376	0.1937	PASS	0.0 ft	0.0	PASS	10.0 ft
+D+0.750Lr+0.750L+0.450W+H	1.600	0.376	0.4669	PASS	0.0 ft	0.0	PASS	10.0 ft
+D+0.750L+0.750S+0.450W+H	1.600	0.376	0.4669	PASS	0.0 ft	0.0	PASS	10.0 ft
+D+0.750L+0.750S+0.5250E+H	1.600	0.376	0.4669	PASS	0.0 ft	0.0	PASS	10.0 ft
+0.60D+0.60W+0.60H	1.600	0.376	0.1162	PASS	0.0 ft	0.0	PASS	10.0 ft

Whipple Consulting Engineers
2528 N Sullivan Rd
Spokane Valley, WA 99216

Project Title:
Engineer:
Project Descr:

Project ID:

Wood Column

File = P:\WCE_WORK\242IDK~9\2MHZA9~D\DBJGBY~H\SEV10W~K\C7A4YC~F\1CFED0~A.EC6
ENERCALC, INC. 1983-2016, Build:6.16.6.7, Ver:6.16.6.7

Lic. # : KW-06009199

Licensee : Whipple Consulting Engineers

Description : C105 (Bundled Studs under B305)

Load Combination Results

Load Combination	C_D	C_P	Maximum Axial + Bending Stress Ratios: Stress Ratio	Status	Location	Maximum Shear Ratios: Stress Ratio	Status	Location
+0.60D+0.70E+0.60H	1.600	0.376	0.1162	PASS	0.0 ft	0.0	PASS	10.0 ft

Maximum Reactions

Note: Only non-zero reactions are listed.

Load Combination	X-X Axis Reaction @ Base	X-X Axis Reaction @ Top	Y-Y Axis Reaction @ Base	Y-Y Axis Reaction @ Top	Axial Reaction @ Base
+D+H		k		k	4.284 k
+D+L+H		k		k	12.344 k
+D+Lr+H		k		k	4.284 k
+D+S+H		k		k	4.284 k
+D+0.750Lr+0.750L+H		k		k	10.329 k
+D+0.750L+0.750S+H		k		k	10.329 k
+D+0.60W+H		k		k	4.284 k
+D+0.70E+H		k		k	4.284 k
+D+0.750Lr+0.750L+0.450W+H		k		k	10.329 k
+D+0.750L+0.750S+0.450W+H		k		k	10.329 k
+D+0.750L+0.750S+0.5250E+H		k		k	10.329 k
+0.60D+0.60W+0.60H		k		k	2.570 k
+0.60D+0.70E+0.60H		k		k	2.570 k
D Only		k		k	4.284 k
Lr Only		k		k	k
L Only		k		k	8.060 k
S Only		k		k	k
W Only		k		k	k
E Only		k		k	k
H Only		k		k	k

Maximum Deflections for Load Combinations

Load Combination	Max. X-X Deflection	Distance	Max. Y-Y Deflection	Distance
+D+H	0.0000 in	0.000 ft	0.000 in	0.000 ft
+D+L+H	0.0000 in	0.000 ft	0.000 in	0.000 ft
+D+Lr+H	0.0000 in	0.000 ft	0.000 in	0.000 ft
+D+S+H	0.0000 in	0.000 ft	0.000 in	0.000 ft
+D+0.750Lr+0.750L+H	0.0000 in	0.000 ft	0.000 in	0.000 ft
+D+0.750L+0.750S+H	0.0000 in	0.000 ft	0.000 in	0.000 ft
+D+0.60W+H	0.0000 in	0.000 ft	0.000 in	0.000 ft
+D+0.70E+H	0.0000 in	0.000 ft	0.000 in	0.000 ft
+D+0.750Lr+0.750L+0.450W+H	0.0000 in	0.000 ft	0.000 in	0.000 ft
+D+0.750L+0.750S+0.450W+H	0.0000 in	0.000 ft	0.000 in	0.000 ft
+D+0.750L+0.750S+0.5250E+H	0.0000 in	0.000 ft	0.000 in	0.000 ft
+0.60D+0.60W+0.60H	0.0000 in	0.000 ft	0.000 in	0.000 ft
+0.60D+0.70E+0.60H	0.0000 in	0.000 ft	0.000 in	0.000 ft
D Only	0.0000 in	0.000 ft	0.000 in	0.000 ft
Lr Only	0.0000 in	0.000 ft	0.000 in	0.000 ft
L Only	0.0000 in	0.000 ft	0.000 in	0.000 ft
S Only	0.0000 in	0.000 ft	0.000 in	0.000 ft
W Only	0.0000 in	0.000 ft	0.000 in	0.000 ft
E Only	0.0000 in	0.000 ft	0.000 in	0.000 ft
H Only	0.0000 in	0.000 ft	0.000 in	0.000 ft

Whipple Consulting Engineers
2528 N Sullivan Rd
Spokane Valley, WA 99216

Project Title:
Engineer:
Project Descr:

Project ID:

Wood Column

File = P:\WCE_WORK\242IDK~9\2MHZA9~D\DBJGBY~H\SEV10W~K\C7A4YC~F\1CFED0~A.EC6
ENERCALC, INC. 1983-2016, Build:6.16.6.7, Ver:6.16.6.7

Lic. # : KW-06009199

Licensee : Whipple Consulting Engineers

Description : C105 (Bundled Studs under B305)

Sketches

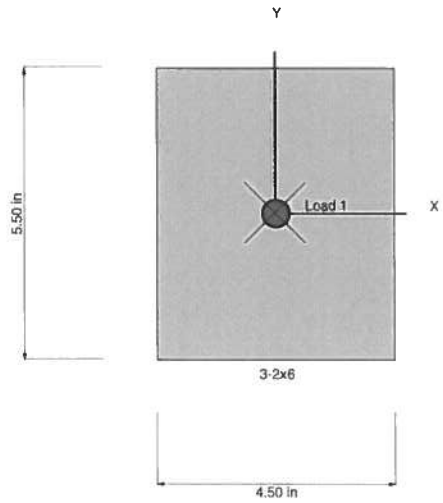

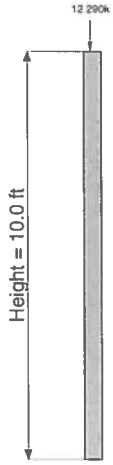

Loads are total entered value. Arrows do not reflect absolute direction.

Whipple Consulting Engineers
2528 N Sullivan Rd
Spokane Valley, WA 99216

Project Title:
Engineer:
Project Descr:

Project ID:

Wood Column

File = P:\WCE_WORK\242IDK~9\2MHZA9~D\DBJGBY~H\SEV10W~K\C7A4YC~F\1CFED0~A.EC6
ENERCALC, INC. 1983-2016, Build:6.16.6.7, Ver:6.16.6.7

Lic. # : KW-06009199 — Licensee : Whipple Consulting Engineers

Description : C106 (Bundled Studs under B308)

Code References

Calculations per 2012 NDS, IBC 2012, CBC 2013, ASCE 7-10
Load Combinations Used : IBC 2012

General Information

Analysis Method : Allowable Stress Design
End Fixities : Top & Bottom Pinned
Overall Column Height : 10.0 ft
(Used for non-slender calculations)

Wood Species : Douglas Fir - Larch
Wood Grade : No.2

Fb - Tension	900.0 psi	Fv	180.0 psi
Fb - Compr	900.0 psi	Ft	575.0 psi
Fc - Prll	1,350.0 psi	Density	31.20 pcf
Fc - Perp	625.0 psi		

E : Modulus of Elasticity . . .	x-x Bending	y-y Bending	Axial
Basic	1,600.0	1,600.0	1,600.0 ksi
Minimum	580.0	580.0	

Wood Section Name : **3-2x4**
Wood Grading/Manuf. : Graded Lumber
Wood Member Type : Sawn

Exact Width	**4.50** in	Allow Stress Modification Factors	
Exact Depth	**3.50** in	Cf or Cv for Bending	1.50
Area	15.750 in^2	Cf or Cv for Compression	1.150
Ix	16.078 in^4	Cf or Cv for Tension	1.50
Iy	26.578 in^4	Cm : Wet Use Factor	1.0
		Ct : Temperature Factor	1.0
		Cfu : Flat Use Factor	1.0
		Kf : Built-up columns	1.0 *NDS 15.3.2*
		Use Cr : Repetitive ?	No

Brace condition for deflection (buckling) along columns :
X-X (width) axis : Fully braced against buckling along X-X Axis
Y-Y (depth) axis : Unbraced Length for X-X Axis buckling = 10.0 ft, K = 1.0

Applied Loads

Service loads entered. Load Factors will be applied for calculations.

Column self weight included : 34.125 lbs * Dead Load Factor
AXIAL LOADS . . .
B308: Axial Load at 10.0 ft, D = 1.890, L = 2.950 k

DESIGN SUMMARY

Bending & Shear Check Results

PASS Max. Axial+Bending Stress Ratio = **0.8126 : 1**

Load Combination	+D+L+H
Governing NDS Forumla	Comp Only, fc/Fc'
Location of max.above base	0.0 ft
At maximum location values are . . .	
Applied Axial	4.874 k
Applied Mx	0.0 k-ft
Applied My	0.0 k-ft
Fc : Allowable	380.822 psi

PASS Maximum Shear Stress Ratio = **0.0 : 1**

Load Combination	+0.60D+0.70E+0.60H
Location of max.above base	10.0 ft
Applied Design Shear	0.0 psi
Allowable Shear	288.0 psi

Maximum SERVICE Lateral Load Reactions . .

Top along Y-Y	0.0 k	Bottom along Y-Y	0.0 k
Top along X-X	0.0 k	Bottom along X-X	0.0 k

Maximum SERVICE Load Lateral Deflections . . .

Along Y-Y 0.0 in at 0.0 ft above base
for load combination : n/a

Along X-X 0.0 in at 0.0 ft above base
for load combination : n/a

Other Factors used to calculate allowable stresses . . .

	Bending	Compression	Tension

Load Combination Results

Load Combination	C_D	C_P	Maximum Axial + Bending Stress Ratios: Stress Ratio	Status	Location	Maximum Shear Ratios: Stress Ratio	Status	Location
+D+H	0.900	0.270	0.3235	PASS	0.0 ft	0.0	PASS	10.0 ft
+D+L+H	1.000	0.245	0.8126	PASS	0.0 ft	0.0	PASS	10.0 ft
+D+Lr+H	1.250	0.199	0.3162	PASS	0.0 ft	0.0	PASS	10.0 ft
+D+S+H	1.150	0.215	0.3178	PASS	0.0 ft	0.0	PASS	10.0 ft
+D+0.750Lr+0.750L+H	1.250	0.199	0.6798	PASS	0.0 ft	0.0	PASS	10.0 ft
+D+0.750L+0.750S+H	1.150	0.215	0.6831	PASS	0.0 ft	0.0	PASS	10.0 ft
+D+0.60W+H	1.600	0.157	0.3125	PASS	0.0 ft	0.0	PASS	10.0 ft
+D+0.70E+H	1.600	0.157	0.3125	PASS	0.0 ft	0.0	PASS	10.0 ft
+D+0.750Lr+0.750L+0.450W+H	1.600	0.157	0.6718	PASS	0.0 ft	0.0	PASS	10.0 ft
+D+0.750L+0.750S+0.450W+H	1.600	0.157	0.6718	PASS	0.0 ft	0.0	PASS	10.0 ft
+D+0.750L+0.750S+0.5250E+H	1.600	0.157	0.6718	PASS	0.0 ft	0.0	PASS	10.0 ft
+0.60D+0.60W+0.60H	1.600	0.157	0.1875	PASS	0.0 ft	0.0	PASS	10.0 ft

Whipple Consulting Engineers
2528 N Sullivan Rd
Spokane Valley, WA 99216

Project Title:
Engineer:
Project Descr:

Project ID:

Wood Column

File = P:\WCE_WORK\242IDK~9\2MHZA9~D\DBJGBY~H\SEV10W~K\C7A4YC~F\1CFED0~A.EC6
ENERCALC, INC. 1983-2016, Build:6.16.6.7, Ver:6.16.6.7

Lic. # : KW-06009199

Licensee : Whipple Consulting Engineers

Description : C106 (Bundled Studs under B308)

Load Combination Results

Load Combination	C_D	C_P	Maximum Axial + Bending Stress Ratios: Stress Ratio	Status	Location	Maximum Shear Ratios: Stress Ratio	Status	Location
+0.60D+0.70E+0.60H	1.600	0.157	0.1875	PASS	0.0 ft	0.0	PASS	10.0 ft

Maximum Reactions

Note: Only non-zero reactions are listed.

Load Combination	X-X Axis Reaction @ Base	X-X Axis Reaction @ Top	Y-Y Axis Reaction @ Base	Y-Y Axis Reaction @ Top	Axial Reaction @ Base
+D+H	k	k	k	k	1.924 k
+D+L+H	k	k	k	k	4.874 k
+D+Lr+H	k	k	k	k	1.924 k
+D+S+H	k	k	k	k	1.924 k
+D+0.750Lr+0.750L+H	k	k	k	k	4.137 k
+D+0.750L+0.750S+H	k	k	k	k	4.137 k
+D+0.60W+H	k	k	k	k	1.924 k
+D+0.70E+H	k	k	k	k	1.924 k
+D+0.750Lr+0.750L+0.450W+H	k	k	k	k	4.137 k
+D+0.750L+0.750S+0.450W+H	k	k	k	k	4.137 k
+D+0.750L+0.750S+0.5250E+H	k	k	k	k	4.137 k
+0.60D+0.60W+0.60H	k	k	k	k	1.154 k
+0.60D+0.70E+0.60H	k	k	k	k	1.154 k
D Only	k	k	k	k	1.924 k
Lr Only	k	k	k	k	k
L Only	k	k	k	k	2.950 k
S Only	k	k	k	k	k
W Only	k	k	k	k	k
E Only	k	k	k	k	k
H Only	k	k	k	k	k

Maximum Deflections for Load Combinations

Load Combination	Max. X-X Deflection	Distance	Max. Y-Y Deflection	Distance
+D+H	0.0000 in	0.000 ft	0.000 in	0.000 ft
+D+L+H	0.0000 in	0.000 ft	0.000 in	0.000 ft
+D+Lr+H	0.0000 in	0.000 ft	0.000 in	0.000 ft
+D+S+H	0.0000 in	0.000 ft	0.000 in	0.000 ft
+D+0.750Lr+0.750L+H	0.0000 in	0.000 ft	0.000 in	0.000 ft
+D+0.750L+0.750S+H	0.0000 in	0.000 ft	0.000 in	0.000 ft
+D+0.60W+H	0.0000 in	0.000 ft	0.000 in	0.000 ft
+D+0.70E+H	0.0000 in	0.000 ft	0.000 in	0.000 ft
+D+0.750Lr+0.750L+0.450W+H	0.0000 in	0.000 ft	0.000 in	0.000 ft
+D+0.750L+0.750S+0.450W+H	0.0000 in	0.000 ft	0.000 in	0.000 ft
+D+0.750L+0.750S+0.5250E+H	0.0000 in	0.000 ft	0.000 in	0.000 ft
+0.60D+0.60W+0.60H	0.0000 in	0.000 ft	0.000 in	0.000 ft
+0.60D+0.70E+0.60H	0.0000 in	0.000 ft	0.000 in	0.000 ft
D Only	0.0000 in	0.000 ft	0.000 in	0.000 ft
Lr Only	0.0000 in	0.000 ft	0.000 in	0.000 ft
L Only	0.0000 in	0.000 ft	0.000 in	0.000 ft
S Only	0.0000 in	0.000 ft	0.000 in	0.000 ft
W Only	0.0000 in	0.000 ft	0.000 in	0.000 ft
E Only	0.0000 in	0.000 ft	0.000 in	0.000 ft
H Only	0.0000 in	0.000 ft	0.000 in	0.000 ft

Whipple Consulting Engineers
2528 N Sullivan Rd
Spokane Valley, WA 99216

Project Title:
Engineer:
Project Descr:

Project ID:

Wood Column

File = P:\WCE_WORK\242IDK~9\2MHZA9~D\DBJGBY~H\SEV10W~K\C7A4YC~F\1CFED0~A.EC6
ENERCALC, INC. 1983-2016, Build:6.16.6.7, Ver:6.16.6.7

Lic. # : KW-06009199

Licensee : Whipple Consulting Engineers

Description : C106 (Bundled Studs under B308)

Sketches

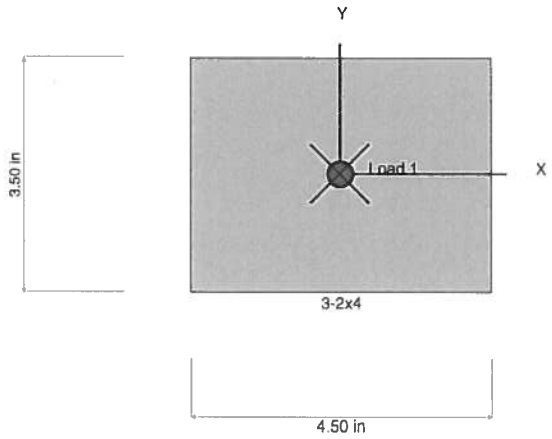

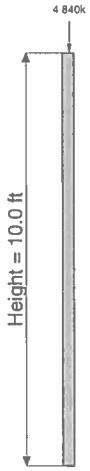

Loads are total entered value. Arrows do not reflect absolute direction.

FOOTINGS

Whipple Consulting Engineers
2528 N Sullivan Rd
Spokane Valley, WA 99216

Project Title:
Engineer:
Project Descr:

Project ID:

Wood Column

File = C:\Users\jaredk\Desktop\16-162~1.EC6
ENERCALC, INC. 1983-2016, Build:6.16.6.7, Ver:6.16.6.7

Lic. # : KW-06009199

Licensee : Whipple Consulting Engineers

Description : Garage Beam COlumn

Code References

Calculations per 2012 NDS, IBC 2012, CBC 2013, ASCE 7-10
Load Combinations Used : IBC 2012

General Information

Analysis Method :	Allowable Stress Design				
End Fixities	Top & Bottom Pinned				
Overall Column Height	10.0 ft				
(Used for non-slender calculations)					
Wood Species	Douglas Fir - Larch				
Wood Grade	No.1				
Fb - Tension	1200 psi	Fv	170 psi		
Fb - Compr	1200 psi	Ft	825 psi		
Fc - Prll	1000 psi	Density	31.2 pcf		
Fc - Perp	625 psi				

E : Modulus of Elasticity . . .	x-x Bending	y-y Bending	Axial
Basic	1600	1600	1600 ksi
Minimum	580	580	

Wood Section Name	6x6		
Wood Grading/Manuf.	Graded Lumber		
Wood Member Type	Sawn		
Exact Width	5.50 in	Allow Stress Modification Factors	
Exact Depth	5.50 in	Cf or Cv for Bending	1.0
Area	30.250 in^2	Cf or Cv for Compression	1.0
Ix	76.255 in^4	Cf or Cv for Tension	1.0
Iy	76.255 in^4	Cm : Wet Use Factor	1.0
		Ct : Temperature Factor	1.0
		Cfu : Flat Use Factor	1.0
		Kf : Built-up columns	1.0 *NDS 15.3.2*
		Use Cr : Repetitive ?	No

Brace condition for deflection (buckling) along columns :
X-X (width) axis : Fully braced against buckling along X-X Axis
Y-Y (depth) axis : Unbraced Length for X-X Axis buckling = 10.0 ft, K = 1.0

Applied Loads

Service loads entered. Load Factors will be applied for calculations.

Column self weight included : 65.542 lbs * Dead Load Factor
AXIAL LOADS . . .
Axial Load at 10.0 ft, D = 2.050, L = 3.280 k
Axial Load at 10.0 ft, D = 2.050, L = 3.280 k

DESIGN SUMMARY

Bending & Shear Check Results

PASS Max. Axial+Bending Stress Ratio = **0.5127 : 1**

Load Combination	+D+L+H
Governing NDS Forumla	Comp Only, fc/Fc'
Location of max.above base	0.0 ft
At maximum location values are . . .	
Applied Axial	10.726 k
Applied Mx	0.0 k-ft
Applied My	0.0 k-ft
Fc : Allowable	691.51 psi

PASS Maximum Shear Stress Ratio = **0.0 : 1**

Load Combination	+0.60D+0.70E+0.60H
Location of max.above base	10.0 ft
Applied Design Shear	0.0 psi
Allowable Shear	272.0 psi

Maximum SERVICE Lateral Load Reactions . .

Top along Y-Y	0.0 k	Bottom along Y-Y	0.0 k
Top along X-X	0.0 k	Bottom along X-X	0.0 k

Maximum SERVICE Load Lateral Deflections . . .

Along Y-Y 0.0 in at 0.0 ft above base
for load combination : n/a

Along X-X 0.0 in at 0.0 ft above base
for load combination : n/a

Other Factors used to calculate allowable stresses . . .

	Bending	Compression	Tension

Load Combination Results

Load Combination	C_D	C_P	Maximum Axial + Bending Stress Ratios: Stress Ratio	Status	Location	Maximum Shear Ratios: Stress Ratio	Status	Location
+D+H	0.900	0.727	0.2106	PASS	0.0 ft	0.0	PASS	10.0 ft
+D+L+H	1.000	0.692	0.5127	PASS	0.0 ft	0.0	PASS	10.0 ft
+D+Lr+H	1.250	0.610	0.1805	PASS	0.0 ft	0.0	PASS	10.0 ft
+D+S+H	1.150	0.641	0.1867	PASS	0.0 ft	0.0	PASS	10.0 ft
+D+0.750Lr+0.750L+H	1.250	0.610	0.3938	PASS	0.0 ft	0.0	PASS	10.0 ft
+D+0.750L+0.750S+H	1.150	0.641	0.4072	PASS	0.0 ft	0.0	PASS	10.0 ft
+D+0.60W+H	1.600	0.516	0.1668	PASS	0.0 ft	0.0	PASS	10.0 ft
+D+0.70E+H	1.600	0.516	0.1668	PASS	0.0 ft	0.0	PASS	10.0 ft
+D+0.750Lr+0.750L+0.450W+H	1.600	0.516	0.3638	PASS	0.0 ft	0.0	PASS	10.0 ft
+D+0.750L+0.750S+0.450W+H	1.600	0.516	0.3638	PASS	0.0 ft	0.0	PASS	10.0 ft
+D+0.750L+0.750S+0.5250E+H	1.600	0.516	0.3638	PASS	0.0 ft	0.0	PASS	10.0 ft

Whipple Consulting Engineers
2528 N Sullivan Rd
Spokane Valley, WA 99216

Project Title:
Engineer:
Project Descr:

Project ID:

Wood Column

File = C:\Users\jaredk\Desktop\16-162~1.EC6
ENERCALC, INC. 1983-2016, Build:6.16.6.7, Ver:6.16.6.7

Lic. # : KW-06009199

Licensee : Whipple Consulting Engineers

Description : Garage Beam COlumn

Load Combination Results

Load Combination	C_D	C_P	Maximum Axial + Bending Stress Ratios			Maximum Shear Ratios		
			Stress Ratio	Status	Location	Stress Ratio	Status	Location
+0.60D+0.60W+0.60H	1.600	0.516	0.1001	PASS	0.0 ft	0.0	PASS	10.0 ft
+0.60D+0.70E+0.60H	1.600	0.516	0.1001	PASS	0.0 ft	0.0	PASS	10.0 ft

Maximum Reactions

Note: Only non-zero reactions are listed.

Load Combination	X-X Axis Reaction		Y-Y Axis Reaction		Axial Reaction
	@ Base	@ Top	@ Base	@ Top	@ Base
+D+H		k		k	4.166 k
+D+L+H		k		k	10.726 k
+D+Lr+H		k		k	4.166 k
+D+S+H		k		k	4.166 k
+D+0.750Lr+0.750L+H		k		k	9.086 k
+D+0.750L+0.750S+H		k		k	9.086 k
+D+0.60W+H		k		k	4.166 k
+D+0.70E+H		k		k	4.166 k
+D+0.750Lr+0.750L+0.450W+H		k		k	9.086 k
+D+0.750L+0.750S+0.450W+H		k		k	9.086 k
+D+0.750L+0.750S+0.5250E+H		k		k	9.086 k
+0.60D+0.60W+0.60H		k		k	2.499 k
+0.60D+0.70E+0.60H		k		k	2.499 k
D Only		k		k	4.166 k
Lr Only		k		k	k
L Only		k		k	6.560 k
S Only		k		k	k
W Only		k		k	k
E Only		k		k	k
H Only		k		k	k

Maximum Deflections for Load Combinations

Load Combination	Max. X-X Deflection	Distance	Max. Y-Y Deflection	Distance
+D+H	0.0000 in	0.000 ft	0.000 in	0.000 ft
+D+L+H	0.0000 in	0.000 ft	0.000 in	0.000 ft
+D+Lr+H	0.0000 in	0.000 ft	0.000 in	0.000 ft
+D+S+H	0.0000 in	0.000 ft	0.000 in	0.000 ft
+D+0.750Lr+0.750L+H	0.0000 in	0.000 ft	0.000 in	0.000 ft
+D+0.750L+0.750S+H	0.0000 in	0.000 ft	0.000 in	0.000 ft
+D+0.60W+H	0.0000 in	0.000 ft	0.000 in	0.000 ft
+D+0.70E+H	0.0000 in	0.000 ft	0.000 in	0.000 ft
+D+0.750Lr+0.750L+0.450W+H	0.0000 in	0.000 ft	0.000 in	0.000 ft
+D+0.750L+0.750S+0.450W+H	0.0000 in	0.000 ft	0.000 in	0.000 ft
+D+0.750L+0.750S+0.5250E+H	0.0000 in	0.000 ft	0.000 in	0.000 ft
+0.60D+0.60W+0.60H	0.0000 in	0.000 ft	0.000 in	0.000 ft
+0.60D+0.70E+0.60H	0.0000 in	0.000 ft	0.000 in	0.000 ft
D Only	0.0000 in	0.000 ft	0.000 in	0.000 ft
Lr Only	0.0000 in	0.000 ft	0.000 in	0.000 ft
L Only	0.0000 in	0.000 ft	0.000 in	0.000 ft
S Only	0.0000 in	0.000 ft	0.000 in	0.000 ft
W Only	0.0000 in	0.000 ft	0.000 in	0.000 ft
E Only	0.0000 in	0.000 ft	0.000 in	0.000 ft
H Only	0.0000 in	0.000 ft	0.000 in	0.000 ft

Whipple Consulting Engineers
2528 N Sullivan Rd
Spokane Valley, WA 99216

Project Title:
Engineer:
Project Descr:

Project ID:

Wood Column

File = C:\Users\jaredk\Desktop\16-162~1.EC6
ENERCALC, INC. 1983-2016, Build:6.16.6.7, Ver:6.16.6.7

Lic. # : KW-06009199

Licensee : Whipple Consulting Engineers

Description : Garage Beam COlumn

Sketches

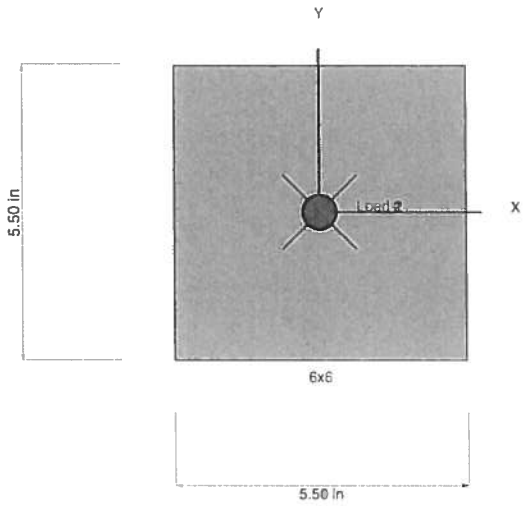

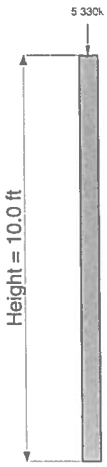

Loads are total entered value. Arrows do not reflect absolute direction.

(2-PLEX CLE - FOOTING

F101 (DECK PIER FTG)

LOAD

PL = 1.57K
LL = 0.88K
SL = 1.03K

∴ 18" SQ CONC PIER

F102 (TYPICAL ENTRY WAY)

LOAD =

DL = 2.23K
LL = 5.73K

∴ 24" SQ x 10" DP
W/(4) #4 EW

F103 (FTG AT C104)

LOAD

DL = 2.284K
SL = 5.730K

WALL FTG 1'-4" W
4'-0" TRIB LENGTH

$BP = \frac{8.014K}{5.32SF} = 1506\ PSF < 3000\ PSF$

F104 (FTG UNDER C105)

LOAD

DL = 4.284K
LL = 8.06K

∴ 2'-4" SQ x 10" DP
W/ (4) #4 EW

F105 (THICKENED SLAB UNDER C106)

LOAD

DL = 1.924K
LL = 2.95K

∴ 2'-4" SQ x 10" DP
W/(4) #4 EW

WCE Whipple Consulting Engineers, Inc.
2528 N. Sullivan Rd. • Spokane Valley, WA 99216
Phone 509-893-2617 • Fax 509-926-0227

Traffic ☐ Planning ☐ Survey ☐ Structural ☑ Landscape ☐ Civil ☐

NAME OF PROJECT			SHEET NUMBER
LEGACY VILLAS			OF
COMPUTED BY	CHECKED BY	JOB NUMBER	DATE
JDK	CAP	16-1024	6-13-16

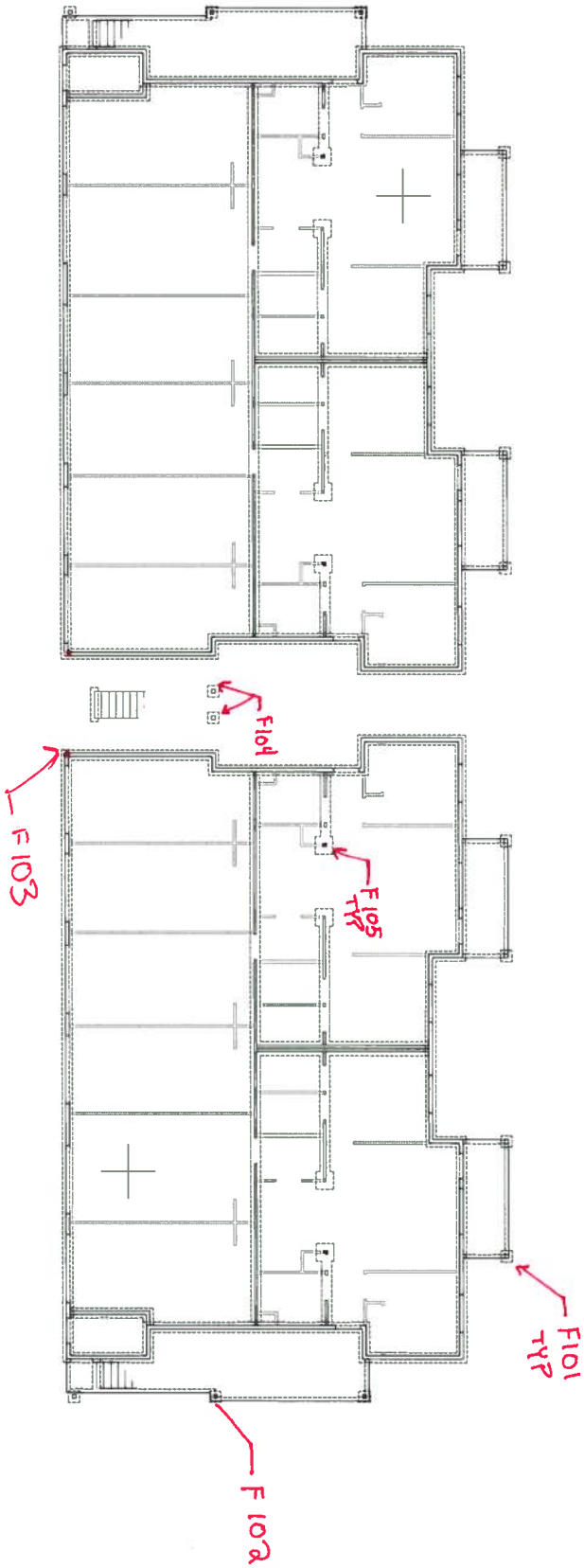
F104
F103
F105 TYP
F101 TYP
F102

Whipple Consulting Engineers
2528 N Sullivan Rd
Spokane Valley, WA 99216

Project Title:
Engineer:
Project Descr:
Project ID:

General Footing

File = P:\WCE_WORK\242IDK~9\2MHZA9~D\DBJGBY~H\SEV10W~K\C7A4YC~F\1CFED0~A.EC6
ENERCALC, INC. 1983-2016, Build:6.16.6.7, Ver:6.16.6.7

Lic. # : KW-06009199 — Licensee : Whipple Consulting Engineers

Description : F101 (Deck Pier FTG)

Code References

Calculations per ACI 318-11, IBC 2012, CBC 2013, ASCE 7-10
Load Combinations Used : IBC 2012

General Information

Material Properties

f'c : Concrete 28 day strength	=	2.50 ksi
fy : Rebar Yield	=	60.0 ksi
Ec : Concrete Elastic Modulus	=	3,122.0 ksi
Concrete Density	=	145.0 pcf
φ Values Flexure	=	0.90
Shear	=	0.750

Analysis Settings

Min Steel % Bending Reinf.	=	
Min Allow % Temp Reinf.	=	0.00180
Min. Overturning Safety Factor	=	1.0 : 1
Min. Sliding Safety Factor	=	1.0 : 1
Add Ftg Wt for Soil Pressure	:	Yes
Use ftg wt for stability, moments & shears	:	Yes
Add Pedestal Wt for Soil Pressure	:	Yes
Use Pedestal wt for stability, mom & shear	:	No

Soil Design Values

Allowable Soil Bearing	=	3.0 ksf
Increase Bearing By Footing Weight	=	No
Soil Passive Resistance (for Sliding)	=	250.0 pcf
Soil/Concrete Friction Coeff.	=	0.30

Increases based on footing Depth

Footing base depth below soil surface	=	0.0 ft
Allow press. increase per foot of depth	=	0.0 ksf
when footing base is below	=	0.0 ft

Increases based on footing plan dimension

Allowable pressure increase per foot of depth	=	0.0 ksf
when max. length or width is greater than	=	0.0 ft

Dimensions

Width parallel to X-X Axis	=	1.50 ft
Length parallel to Z-Z Axis	=	1.50 ft
Footing Thickness	=	10.0 in

Pedestal dimensions...		
px : parallel to X-X Axis	=	0.0 in
pz : parallel to Z-Z Axis	=	0.0 in
Height	=	26.0 in
Rebar Centerline to Edge of Concrete...		
at Bottom of footing	=	3.0 in

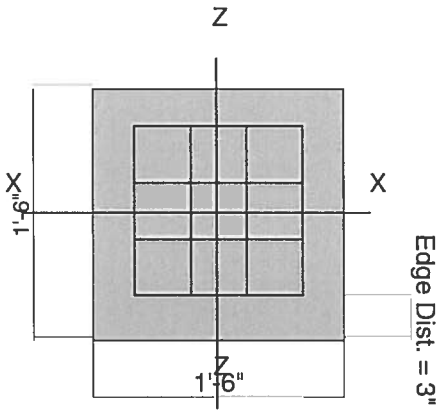

Reinforcing

Bars parallel to X-X Axis			
Number of Bars	=		4.0
Reinforcing Bar Size	=	#	4
Bars parallel to Z-Z Axis			
Number of Bars	=		4
Reinforcing Bar Size	=	#	4

Bandwidth Distribution Check (ACI 15.4.4.2)

Direction Requiring Closer Separation	n/a
# Bars required within zone	n/a
# Bars required on each side of zone	n/a

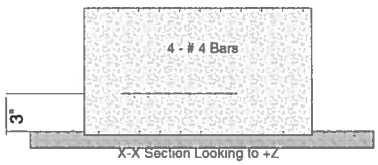

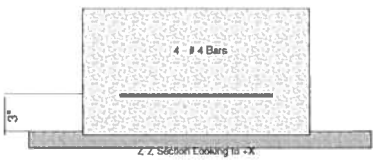

Applied Loads

		D	Lr	L	S	W	E	H
P : Column Load	=	1.570	0.0	0.880	1.030	0.0	0.0	0.0 k
OB : Overburden	=	0.0	0.0	0.0	0.0	0.0	0.0	0.0 ksf
M-xx	=	0.0	0.0	0.0	0.0	0.0	0.0	0.0 k-ft
M-zz	=	0.0	0.0	0.0	0.0	0.0	0.0	0.0 k-ft
V-x	=	0.0	0.0	0.0	0.0	0.0	0.0	0.0 k
V-z	=	0.0	0.0	0.0	0.0	0.0	0.0	0.0 k

Whipple Consulting Engineers
2528 N Sullivan Rd
Spokane Valley, WA 99216

Project Title:
Engineer:
Project Descr:

Project ID:

General Footing

File = P:\WCE_WORK\242IDK~9\2MHZA9~D\DBJGBY~H\SEV10W~K\C7A4YC~F\1CFED0~A.EC6
ENERCALC, INC. 1983-2016, Build:6.16.6.7, Ver:6.16.6.7
Lic. # : KW-06009199
Licensee : Whipple Consulting Engineers

Description : F101 (Deck Pier FTG)

DESIGN SUMMARY

Design OK

	Min. Ratio	Item	Applied	Capacity	Governing Load Combination
PASS	0.4850	Soil Bearing	1.455 ksf	3.0 ksf	+D+0.750L+0.750S+0.5250E+H about Z-
PASS	n/a	Overturning - X-X	0.0 k-ft	0.0 k-ft	No Overturning
PASS	n/a	Overturning - Z-Z	0.0 k-ft	0.0 k-ft	No Overturning
PASS	n/a	Sliding - X-X	0.0 k	0.0 k	No Sliding
PASS	n/a	Sliding - Z-Z	0.0 k	0.0 k	No Sliding
PASS	n/a	Uplift	0.0 k	0.0 k	No Uplift
PASS	0.03246	Z Flexure (+X)	0.4965 k-ft	15.294 k-ft	+1.20D+0.50L+1.60S+1.60H
PASS	0.03246	Z Flexure (-X)	0.4965 k-ft	15.294 k-ft	+1.20D+0.50L+1.60S+1.60H
PASS	0.03246	X Flexure (+Z)	0.4965 k-ft	15.294 k-ft	+1.20D+0.50L+1.60S+1.60H
PASS	0.03246	X Flexure (-Z)	0.4965 k-ft	15.294 k-ft	+1.20D+0.50L+1.60S+1.60H
PASS	0.04904	1-way Shear (+X)	3.678 psi	75.0 psi	+1.20D+0.50L+1.60S+1.60H
PASS	0.04904	1-way Shear (-X)	3.678 psi	75.0 psi	+1.20D+0.50L+1.60S+1.60H
PASS	0.04904	1-way Shear (+Z)	3.678 psi	75.0 psi	+1.20D+0.50L+1.60S+1.60H
PASS	0.04904	1-way Shear (-Z)	3.678 psi	75.0 psi	+1.20D+0.50L+1.60S+1.60H
PASS	0.1135	2-way Punching	17.023 psi	150.0 psi	+1.20D+0.50L+1.60S+1.60H

Detailed Results

Soil Bearing

Rotation Axis & Load Combination...	Gross Allowable	Xecc (in)	Zecc (in)	Actual Soil Bearing Stress @ Location Bottom, -Z	Top, +Z	Left, -X	Right, +X	Actual / Allow Ratio
X-X. +D+H	3.0	n/a	0.0	0.8186	0.8186	n/a	n/a	0.273
X-X. +D+L+H	3.0	n/a	0.0	1.210	1.210	n/a	n/a	0.403
X-X. +D+Lr+H	3.0	n/a	0.0	0.8186	0.8186	n/a	n/a	0.273
X-X. +D+S+H	3.0	n/a	0.0	1.276	1.276	n/a	n/a	0.425
X-X. +D+0.750Lr+0.750L+H	3.0	n/a	0.0	1.112	1.112	n/a	n/a	0.371
X-X. +D+0.750L+0.750S+H	3.0	n/a	0.0	1.455	1.455	n/a	n/a	0.485
X-X. +D+0.60W+H	3.0	n/a	0.0	0.8186	0.8186	n/a	n/a	0.273
X-X. +D+0.70E+H	3.0	n/a	0.0	0.8186	0.8186	n/a	n/a	0.273
X-X. +D+0.750Lr+0.750L+0.450W+H	3.0	n/a	0.0	1.112	1.112	n/a	n/a	0.371
X-X. +D+0.750L+0.750S+0.450W+H	3.0	n/a	0.0	1.455	1.455	n/a	n/a	0.485
X-X. +D+0.750L+0.750S+0.5250E+H	3.0	n/a	0.0	1.455	1.455	n/a	n/a	0.485
X-X. +0.60D+0.60W+0.60H	3.0	n/a	0.0	0.4912	0.4912	n/a	n/a	0.164
X-X. +0.60D+0.70E+0.60H	3.0	n/a	0.0	0.4912	0.4912	n/a	n/a	0.164
Z-Z. +D+H	3.0	0.0	n/a	n/a	n/a	0.8186	0.8186	0.273
Z-Z. +D+L+H	3.0	0.0	n/a	n/a	n/a	1.210	1.210	0.403
Z-Z. +D+Lr+H	3.0	0.0	n/a	n/a	n/a	0.8186	0.8186	0.273
Z-Z. +D+S+H	3.0	0.0	n/a	n/a	n/a	1.276	1.276	0.425
Z-Z. +D+0.750Lr+0.750L+H	3.0	0.0	n/a	n/a	n/a	1.112	1.112	0.371
Z-Z. +D+0.750L+0.750S+H	3.0	0.0	n/a	n/a	n/a	1.455	1.455	0.485
Z-Z. +D+0.60W+H	3.0	0.0	n/a	n/a	n/a	0.8186	0.8186	0.273
Z-Z. +D+0.70E+H	3.0	0.0	n/a	n/a	n/a	0.8186	0.8186	0.273
Z-Z. +D+0.750Lr+0.750L+0.450W+H	3.0	0.0	n/a	n/a	n/a	1.112	1.112	0.371
Z-Z. +D+0.750L+0.750S+0.450W+H	3.0	0.0	n/a	n/a	n/a	1.455	1.455	0.485
Z-Z. +D+0.750L+0.750S+0.5250E+H	3.0	0.0	n/a	n/a	n/a	1.455	1.455	0.485
Z-Z. +0.60D+0.60W+0.60H	3.0	0.0	n/a	n/a	n/a	0.4912	0.4912	0.164
Z-Z. +0.60D+0.70E+0.60H	3.0	0.0	n/a	n/a	n/a	0.4912	0.4912	0.164

Overturning Stability

Rotation Axis & Load Combination...	Overturning Moment	Resisting Moment	Stability Ratio	Status
Footing Has NO Overturning				

All units k

Sliding Stability

Force Application Axis Load Combination...	Sliding Force	Resisting Force	Stability Ratio	Status
Footing Has NO Sliding				

Whipple Consulting Engineers
2528 N Sullivan Rd
Spokane Valley, WA 99216

Project Title:
Engineer:
Project Descr:

Project ID:

General Footing

File = P:\WCE_WORK\242IDK~9\2MHZA9~D\DBJGBY~H\SEV10W~K\C7A4YC~F\1CFED0~A.EC6
ENERCALC, INC. 1983-2016, Build:6.16.6.7, Ver:6.16.6.7

Lic. # : KW-06009199

Licensee : Whipple Consulting Engineers

Description : F101 (Deck Pier FTG)

Footing Flexure

Flexure Axis & Load Combination	Mu k-ft	Side	Tension Surface	As Req'd in^2	Gvrn. As in^2	Actual As in^2	Phi*Mn k-ft	Status
X-X, +1.40D+1.60H	0.2748	+Z	Bottom	0.216	Min Temp %	0.5333	15.294	OK

Whipple Consulting Engineers
2528 N Sullivan Rd
Spokane Valley, WA 99216

Project Title:
Engineer:
Project Descr:

Project ID:

General Footing

File = P:\WCE_WORK\242IDK~9\2MHZA9~D\DBJGBY~H\SEV10W~K\C7A4YC~F\1CFED0~A.EC6
ENERCALC, INC. 1983-2016, Build:6.16.6.7, Ver:6.16.6.7

Lic. # : KW-06009199

Licensee : Whipple Consulting Engineers

Description : F101 (Deck Pier FTG)

Footing Flexure

Flexure Axis & Load Combination	Mu k-ft	Side	Tension Surface	As Req'd in^2	Gvrn. As in^2	Actual As in^2	Phi*Mn k-ft	Status
X-X, +1.40D+1.60H	0.2748	-Z	Bottom	0.216	Min Temp %	0.5333	15.294	OK
X-X, +1.20D+0.50Lr+1.60L+1.60H	0.4115	+Z	Bottom	0.216	Min Temp %	0.5333	15.294	OK
X-X, +1.20D+0.50Lr+1.60L+1.60H	0.4115	-Z	Bottom	0.216	Min Temp %	0.5333	15.294	OK
X-X, +1.20D+1.60L+0.50S+1.60H	0.4759	+Z	Bottom	0.216	Min Temp %	0.5333	15.294	OK
X-X, +1.20D+1.60L+0.50S+1.60H	0.4759	-Z	Bottom	0.216	Min Temp %	0.5333	15.294	OK
X-X, +1.20D+1.60Lr+0.50L+1.60H	0.2905	+Z	Bottom	0.216	Min Temp %	0.5333	15.294	OK
X-X, +1.20D+1.60Lr+0.50L+1.60H	0.2905	-Z	Bottom	0.216	Min Temp %	0.5333	15.294	OK
X-X, +1.20D+1.60Lr+0.50W+1.60H	0.2355	+Z	Bottom	0.216	Min Temp %	0.5333	15.294	OK
X-X, +1.20D+1.60Lr+0.50W+1.60H	0.2355	-Z	Bottom	0.216	Min Temp %	0.5333	15.294	OK
X-X, +1.20D+0.50L+1.60S+1.60H	0.4965	+Z	Bottom	0.216	Min Temp %	0.5333	15.294	OK
X-X, +1.20D+0.50L+1.60S+1.60H	0.4965	-Z	Bottom	0.216	Min Temp %	0.5333	15.294	OK
X-X, +1.20D+1.60S+0.50W+1.60H	0.4415	+Z	Bottom	0.216	Min Temp %	0.5333	15.294	OK
X-X, +1.20D+1.60S+0.50W+1.60H	0.4415	-Z	Bottom	0.216	Min Temp %	0.5333	15.294	OK
X-X, +1.20D+0.50Lr+0.50L+W+1.60H	0.2905	+Z	Bottom	0.216	Min Temp %	0.5333	15.294	OK
X-X, +1.20D+0.50Lr+0.50L+W+1.60H	0.2905	-Z	Bottom	0.216	Min Temp %	0.5333	15.294	OK
X-X, +1.20D+0.50L+0.50S+W+1.60H	0.3549	+Z	Bottom	0.216	Min Temp %	0.5333	15.294	OK
X-X, +1.20D+0.50L+0.50S+W+1.60H	0.3549	-Z	Bottom	0.216	Min Temp %	0.5333	15.294	OK
X-X, +1.20D+0.50L+0.70S+E+1.60H	0.3806	+Z	Bottom	0.216	Min Temp %	0.5333	15.294	OK
X-X, +1.20D+0.50L+0.70S+E+1.60H	0.3806	-Z	Bottom	0.216	Min Temp %	0.5333	15.294	OK
X-X, +0.90D+W+0.90H	0.1766	+Z	Bottom	0.216	Min Temp %	0.5333	15.294	OK
X-X, +0.90D+W+0.90H	0.1766	-Z	Bottom	0.216	Min Temp %	0.5333	15.294	OK
X-X, +0.90D+E+0.90H	0.1766	+Z	Bottom	0.216	Min Temp %	0.5333	15.294	OK
X-X, +0.90D+E+0.90H	0.1766	-Z	Bottom	0.216	Min Temp %	0.5333	15.294	OK
Z-Z, +1.40D+1.60H	0.2748	-X	Bottom	0.216	Min Temp %	0.5333	15.294	OK
Z-Z, +1.40D+1.60H	0.2748	+X	Bottom	0.216	Min Temp %	0.5333	15.294	OK
Z-Z, +1.20D+0.50Lr+1.60L+1.60H	0.4115	-X	Bottom	0.216	Min Temp %	0.5333	15.294	OK
Z-Z, +1.20D+0.50Lr+1.60L+1.60H	0.4115	+X	Bottom	0.216	Min Temp %	0.5333	15.294	OK
Z-Z, +1.20D+1.60L+0.50S+1.60H	0.4759	-X	Bottom	0.216	Min Temp %	0.5333	15.294	OK
Z-Z, +1.20D+1.60L+0.50S+1.60H	0.4759	+X	Bottom	0.216	Min Temp %	0.5333	15.294	OK
Z-Z, +1.20D+1.60Lr+0.50L+1.60H	0.2905	-X	Bottom	0.216	Min Temp %	0.5333	15.294	OK
Z-Z, +1.20D+1.60Lr+0.50L+1.60H	0.2905	+X	Bottom	0.216	Min Temp %	0.5333	15.294	OK
Z-Z, +1.20D+1.60Lr+0.50W+1.60H	0.2355	-X	Bottom	0.216	Min Temp %	0.5333	15.294	OK
Z-Z, +1.20D+1.60Lr+0.50W+1.60H	0.2355	+X	Bottom	0.216	Min Temp %	0.5333	15.294	OK
Z-Z, +1.20D+0.50L+1.60S+1.60H	0.4965	-X	Bottom	0.216	Min Temp %	0.5333	15.294	OK
Z-Z, +1.20D+0.50L+1.60S+1.60H	0.4965	+X	Bottom	0.216	Min Temp %	0.5333	15.294	OK
Z-Z, +1.20D+1.60S+0.50W+1.60H	0.4415	-X	Bottom	0.216	Min Temp %	0.5333	15.294	OK
Z-Z, +1.20D+1.60S+0.50W+1.60H	0.4415	+X	Bottom	0.216	Min Temp %	0.5333	15.294	OK
Z-Z, +1.20D+0.50Lr+0.50L+W+1.60H	0.2905	-X	Bottom	0.216	Min Temp %	0.5333	15.294	OK
Z-Z, +1.20D+0.50Lr+0.50L+W+1.60H	0.2905	+X	Bottom	0.216	Min Temp %	0.5333	15.294	OK
Z-Z, +1.20D+0.50L+0.50S+W+1.60H	0.3549	-X	Bottom	0.216	Min Temp %	0.5333	15.294	OK
Z-Z, +1.20D+0.50L+0.50S+W+1.60H	0.3549	+X	Bottom	0.216	Min Temp %	0.5333	15.294	OK
Z-Z, +1.20D+0.50L+0.70S+E+1.60H	0.3806	-X	Bottom	0.216	Min Temp %	0.5333	15.294	OK
Z-Z, +1.20D+0.50L+0.70S+E+1.60H	0.3806	+X	Bottom	0.216	Min Temp %	0.5333	15.294	OK
Z-Z, +0.90D+W+0.90H	0.1766	-X	Bottom	0.216	Min Temp %	0.5333	15.294	OK
Z-Z, +0.90D+W+0.90H	0.1766	+X	Bottom	0.216	Min Temp %	0.5333	15.294	OK
Z-Z, +0.90D+E+0.90H	0.1766	-X	Bottom	0.216	Min Temp %	0.5333	15.294	OK
Z-Z, +0.90D+E+0.90H	0.1766	+X	Bottom	0.216	Min Temp %	0.5333	15.294	OK

One Way Shear

Load Combination...	Vu @ -X	Vu @ +X	Vu @ -Z	Vu @ +Z	Vu:Max	Phi Vn	Vu / Phi*Vn	Status
+1.40D+1.60H	2.035 psi	2.035 psi	2.035 psi	2.035 psi	2.035 psi	75 psi	0.02714	OK
+1.20D+0.50Lr+1.60L+1.60H	3.048 psi	3.048 psi	3.048 psi	3.048 psi	3.048 psi	75 psi	0.04064	OK
+1.20D+1.60L+0.50S+1.60H	3.525 psi	3.525 psi	3.525 psi	3.525 psi	3.525 psi	75 psi	0.047	OK
+1.20D+1.60Lr+0.50L+1.60H	2.152 psi	2.152 psi	2.152 psi	2.152 psi	2.152 psi	75 psi	0.02869	OK
+1.20D+1.60Lr+0.50W+1.60H	1.744 psi	1.744 psi	1.744 psi	1.744 psi	1.744 psi	75 psi	0.02326	OK
+1.20D+0.50L+1.60S+1.60H	3.678 psi	3.678 psi	3.678 psi	3.678 psi	3.678 psi	75 psi	0.04904	OK
+1.20D+1.60S+0.50W+1.60H	3.27 psi	3.27 psi	3.27 psi	3.27 psi	3.27 psi	75 psi	0.04361	OK
+1.20D+0.50Lr+0.50L+W+1.60H	2.152 psi	2.152 psi	2.152 psi	2.152 psi	2.152 psi	75 psi	0.02869	OK
+1.20D+0.50L+0.50S+W+1.60H	2.629 psi	2.629 psi	2.629 psi	2.629 psi	2.629 psi	75 psi	0.03505	OK
+1.20D+0.50L+0.70S+E+1.60H	2.819 psi	2.819 psi	2.819 psi	2.819 psi	2.819 psi	75 psi	0.03759	OK
+0.90D+W+0.90H	1.308 psi	1.308 psi	1.308 psi	1.308 psi	1.308 psi	75 psi	0.01744	OK
+0.90D+E+0.90H	1.308 psi	1.308 psi	1.308 psi	1.308 psi	1.308 psi	75 psi	0.01744	OK

Whipple Consulting Engineers
2528 N Sullivan Rd
Spokane Valley, WA 99216

Project Title:
Engineer:
Project Descr:

Project ID:

General Footing

File = P:\WCE_WORK\242IDK~9\2MHZA9~D\DBJGBY~H\SEV10W~K\C7A4YC~F\1CFED0~A.EC6
ENERCALC, INC. 1983-2016, Build:6.16.6.7, Ver:6.16.6.7

Lic. # : KW-06009199

Licensee : Whipple Consulting Engineers

Description : F101 (Deck Pier FTG)

Punching Shear

All units k

Load Combination...	Vu	Phi*Vn	Vu / Phi*Vn	Status
+1.40D+1.60H	9.42 psi	150psi	0.0628	OK
+1.20D+0.50Lr+1.60L+1.60H	14.109 psi	150psi	0.09406	OK
+1.20D+1.60L+0.50S+1.60H	16.316 psi	150psi	0.1088	OK
+1.20D+1.60Lr+0.50L+1.60H	9.96 psi	150psi	0.0664	OK
+1.20D+1.60Lr+0.50W+1.60H	8.074 psi	150psi	0.05383	OK
+1.20D+0.50L+1.60S+1.60H	17.023 psi	150psi	0.1135	OK
+1.20D+1.60S+0.50W+1.60H	15.137 psi	150psi	0.1009	OK
+1.20D+0.50Lr+0.50L+W+1.60H	9.96 psi	150psi	0.0664	OK
+1.20D+0.50L+0.50S+W+1.60H	12.167 psi	150psi	0.08111	OK
+1.20D+0.50L+0.70S+E+1.60H	13.05 psi	150psi	0.087	OK
+0.90D+W+0.90H	6.056 psi	150psi	0.04037	OK
+0.90D+E+0.90H	6.056 psi	150psi	0.04037	OK

Whipple Consulting Engineers
2528 N Sullivan Rd
Spokane Valley, WA 99216

Project Title:
Engineer:
Project Descr:

Project ID:

General Footing

File = P:\WCE_WORK\242IDK~9\2MHZA9~D\DBJGBY~H\SEV10W~K\C7A4YC~F\1CFED0~A.EC6
ENERCALC, INC. 1983-2016, Build:6.16.6.7, Ver:6.16.6.7

Lic. # : KW-06009199 — Licensee : Whipple Consulting Engineers

Description : F102 (Typical Entryway FTG)

Code References

Calculations per ACI 318-11, IBC 2012, CBC 2013, ASCE 7-10
Load Combinations Used : IBC 2012

General Information

Material Properties

f'c : Concrete 28 day strength	=	2.50 ksi
fy : Rebar Yield	=	60.0 ksi
Ec : Concrete Elastic Modulus	=	3,122.0 ksi
Concrete Density	=	145.0 pcf
φ Values Flexure	=	0.90
Shear	=	0.750

Analysis Settings

Min Steel % Bending Reinf.	=	
Min Allow % Temp Reinf.	=	0.00180
Min. Overturning Safety Factor	=	1.0 : 1
Min. Sliding Safety Factor	=	1.0 : 1
Add Ftg Wt for Soil Pressure	:	Yes
Use ftg wt for stability, moments & shears	:	Yes
Add Pedestal Wt for Soil Pressure	:	Yes
Use Pedestal wt for stability, mom & shear	:	No

Soil Design Values

Allowable Soil Bearing	=	3.0 ksf
Increase Bearing By Footing Weight	=	No
Soil Passive Resistance (for Sliding)	=	250.0 pcf
Soil/Concrete Friction Coeff.	=	0.30

Increases based on footing Depth

Footing base depth below soil surface	=	0.0 ft
Allow press. increase per foot of depth	=	0.0 ksf
when footing base is below	=	0.0 ft

Increases based on footing plan dimension

Allowable pressure increase per foot of depth	=	0.0 ksf
when max. length or width is greater than	=	0.0 ft

Dimensions

Width parallel to X-X Axis	=	2.0 ft
Length parallel to Z-Z Axis	=	2.0 ft
Footing Thickness	=	10.0 in

Pedestal dimensions...

px : parallel to X-X Axis	=	0.0 in
pz : parallel to Z-Z Axis	=	0.0 in
Height	=	26.0 in
Rebar Centerline to Edge of Concrete... at Bottom of footing	=	3.0 in

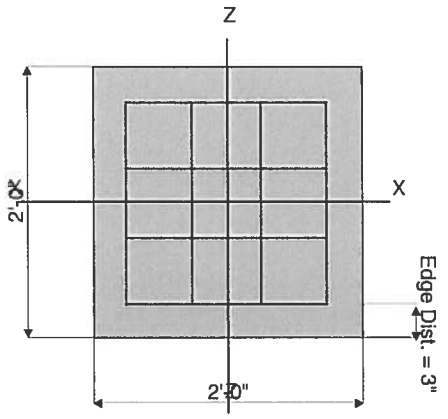

Reinforcing

Bars parallel to X-X Axis		
Number of Bars	=	4.0
Reinforcing Bar Size	=	# 4
Bars parallel to Z-Z Axis		
Number of Bars	=	4.0
Reinforcing Bar Size	=	# 4

Bandwidth Distribution Check (ACI 15.4.4.2)

Direction Requiring Closer Separation	n/a
# Bars required within zone	n/a
# Bars required on each side of zone	n/a

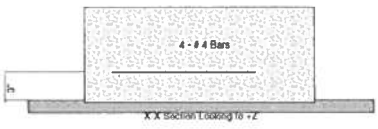

X-X Section Looking to +Z

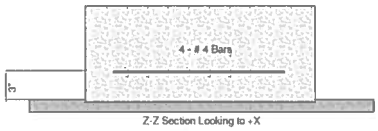

Z-Z Section Looking to +X

Applied Loads

		D	Lr	L	S	W	E	H
P : Column Load	=	2.230	0.0	5.730	0.0	0.0	0.0	0.0 k
OB : Overburden	=	0.0	0.0	0.0	0.0	0.0	0.0	0.0 ksf
M-xx	=	0.0	0.0	0.0	0.0	0.0	0.0	0.0 k-ft
M-zz	=	0.0	0.0	0.0	0.0	0.0	0.0	0.0 k-ft
V-x	=	0.0	0.0	0.0	0.0	0.0	0.0	0.0 k
V-z	=	0.0	0.0	0.0	0.0	0.0	0.0	0.0 k

Whipple Consulting Engineers
2528 N Sullivan Rd
Spokane Valley, WA 99216

Project Title:
Engineer:
Project Descr:

Project ID:

General Footing

File = P:\WCE_WORK\242IDK~9\2MHZA9~D\DBJGBY~H\SEV10W~K\C7A4YC~F\1CFED0~A.EC6
ENERCALC, INC. 1983-2016, Build:6.16.6.7, Ver:6.16.6.7

Lic. # : KW-06009199

Licensee : Whipple Consulting Engineers

Description : F102 (Typical Entryway FTG)

DESIGN SUMMARY

Design OK

	Min. Ratio	Item	Applied	Capacity	Governing Load Combination
PASS	0.7037	Soil Bearing	2.111 ksf	3.0 ksf	+D+L+H about Z-Z axis
PASS	n/a	Overturning - X-X	0.0 k-ft	0.0 k-ft	No Overturning
PASS	n/a	Overturning - Z-Z	0.0 k-ft	0.0 k-ft	No Overturning
PASS	n/a	Sliding - X-X	0.0 k	0.0 k	No Sliding
PASS	n/a	Sliding - Z-Z	0.0 k	0.0 k	No Sliding
PASS	n/a	Uplift	0.0 k	0.0 k	No Uplift
PASS	0.1260	Z Flexure (+X)	1.481 k-ft	11.753 k-ft	+1.20D+0.50Lr+1.60L+1.60H
PASS	0.1260	Z Flexure (-X)	1.481 k-ft	11.753 k-ft	+1.20D+0.50Lr+1.60L+1.60H
PASS	0.1260	X Flexure (+Z)	1.481 k-ft	11.753 k-ft	+1.20D+0.50Lr+1.60L+1.60H
PASS	0.1260	X Flexure (-Z)	1.481 k-ft	11.753 k-ft	+1.20D+0.50Lr+1.60L+1.60H
PASS	0.2037	1-way Shear (+X)	15.275 psi	75.0 psi	+1.20D+0.50Lr+1.60L+1.60H
PASS	0.2037	1-way Shear (-X)	15.275 psi	75.0 psi	+1.20D+0.50Lr+1.60L+1.60H
PASS	0.2037	1-way Shear (+Z)	15.275 psi	75.0 psi	+1.20D+0.50Lr+1.60L+1.60H
PASS	0.2037	1-way Shear (-Z)	15.275 psi	75.0 psi	+1.20D+0.50Lr+1.60L+1.60H
PASS	0.3666	2-way Punching	54.990 psi	150.0 psi	+1.20D+0.50Lr+1.60L+1.60H

Detailed Results

Soil Bearing

Rotation Axis & Load Combination...	Gross Allowable	Xecc (in)	Zecc (in)	Actual Soil Bearing Stress @ Location Bottom, -Z	Top, +Z	Left, -X	Right, +X	Actual / Allow Ratio
X-X, +D+H	3.0	n/a	0.0	0.6783	0.6783	n/a	n/a	0.226
X-X, +D+L+H	3.0	n/a	0.0	2.111	2.111	n/a	n/a	0.704
X-X, +D+Lr+H	3.0	n/a	0.0	0.6783	0.6783	n/a	n/a	0.226
X-X, +D+S+H	3.0	n/a	0.0	0.6783	0.6783	n/a	n/a	0.226
X-X, +D+0.750Lr+0.750L+H	3.0	n/a	0.0	1.753	1.753	n/a	n/a	0.584
X-X, +D+0.750L+0.750S+H	3.0	n/a	0.0	1.753	1.753	n/a	n/a	0.584
X-X, +D+0.60W+H	3.0	n/a	0.0	0.6783	0.6783	n/a	n/a	0.226
X-X, +D+0.70E+H	3.0	n/a	0.0	0.6783	0.6783	n/a	n/a	0.226
X-X, +D+0.750Lr+0.750L+0.450W+H	3.0	n/a	0.0	1.753	1.753	n/a	n/a	0.584
X-X, +D+0.750L+0.750S+0.450W+H	3.0	n/a	0.0	1.753	1.753	n/a	n/a	0.584
X-X, +D+0.750L+0.750S+0.5250E+H	3.0	n/a	0.0	1.753	1.753	n/a	n/a	0.584
X-X, +0.60D+0.60W+0.60H	3.0	n/a	0.0	0.4070	0.4070	n/a	n/a	0.136
X-X, +0.60D+0.70E+0.60H	3.0	n/a	0.0	0.4070	0.4070	n/a	n/a	0.136
Z-Z, +D+H	3.0	0.0	n/a	n/a	n/a	0.6783	0.6783	0.226
Z-Z, +D+L+H	3.0	0.0	n/a	n/a	n/a	2.111	2.111	0.704
Z-Z, +D+Lr+H	3.0	0.0	n/a	n/a	n/a	0.6783	0.6783	0.226
Z-Z, +D+S+H	3.0	0.0	n/a	n/a	n/a	0.6783	0.6783	0.226
Z-Z, +D+0.750Lr+0.750L+H	3.0	0.0	n/a	n/a	n/a	1.753	1.753	0.584
Z-Z, +D+0.750L+0.750S+H	3.0	0.0	n/a	n/a	n/a	1.753	1.753	0.584
Z-Z, +D+0.60W+H	3.0	0.0	n/a	n/a	n/a	0.6783	0.6783	0.226
Z-Z, +D+0.70E+H	3.0	0.0	n/a	n/a	n/a	0.6783	0.6783	0.226
Z-Z, +D+0.750Lr+0.750L+0.450W+H	3.0	0.0	n/a	n/a	n/a	1.753	1.753	0.584
Z-Z, +D+0.750L+0.750S+0.450W+H	3.0	0.0	n/a	n/a	n/a	1.753	1.753	0.584
Z-Z, +D+0.750L+0.750S+0.5250E+H	3.0	0.0	n/a	n/a	n/a	1.753	1.753	0.584
Z-Z, +0.60D+0.60W+0.60H	3.0	0.0	n/a	n/a	n/a	0.4070	0.4070	0.136
Z-Z, +0.60D+0.70E+0.60H	3.0	0.0	n/a	n/a	n/a	0.4070	0.4070	0.136

Overturning Stability

Rotation Axis & Load Combination...	Overturning Moment	Resisting Moment	Stability Ratio	Status
Footing Has NO Overturning				

Sliding Stability

All units k

Force Application Axis Load Combination...	Sliding Force	Resisting Force	Stability Ratio	Status
Footing Has NO Sliding				

Whipple Consulting Engineers
2528 N Sullivan Rd
Spokane Valley, WA 99216

Project Title:
Engineer:
Project Descr:

Project ID:

General Footing

File = P:\WCE_WORK\242IDK~9\2MHZA9~D\DBJGBY~H\SEV10W~K\C7A4YC~F\1CFED0~A.EC6
ENERCALC, INC. 1983-2016, Build:6.16.6.7, Ver:6.16.6.7

Lic. # : KW-06009199 — Licensee : Whipple Consulting Engineers

Description : F102 (Typical Entryway FTG)

Footing Flexure

Flexure Axis & Load Combination	Mu k-ft	Side	Tension Surface	As Req'd in^2	Gvrn. As in^2	Actual As in^2	Phi*Mn k-ft	Status
X-X, +1.40D+1.60H	0.3903	+Z	Bottom	0.216	Min Temp %	0.40	11.753	OK

Whipple Consulting Engineers
2528 N Sullivan Rd
Spokane Valley, WA 99216

Project Title:
Engineer:
Project Descr:

Project ID:

General Footing

File = P:\WCE_WORK\242IDK~9\2MHZA9~D\DBJGBY~H\SEV10W~K\C7A4YC~F\1CFED0~A.EC6
ENERCALC, INC. 1983-2016, Build:6.16.6.7, Ver:6.16.6.7

Lic. # : KW-06009199 — Licensee : Whipple Consulting Engineers

Description : F102 (Typical Entryway FTG)

Footing Flexure

Flexure Axis & Load Combination	Mu k-ft	Side	Tension Surface	As Req'd in^2	Gvrn. As in^2	Actual As in^2	Phi*Mn k-ft	Status
X-X, +1.40D+1.60H	0.3903	-Z	Bottom	0.216	Min Temp %	0.40	11.753	OK
X-X, +1.20D+0.50Lr+1.60L+1.60H	1.481	+Z	Bottom	0.216	Min Temp %	0.40	11.753	OK
X-X, +1.20D+0.50Lr+1.60L+1.60H	1.481	-Z	Bottom	0.216	Min Temp %	0.40	11.753	OK
X-X, +1.20D+1.60L+0.50S+1.60H	1.481	+Z	Bottom	0.216	Min Temp %	0.40	11.753	OK
X-X, +1.20D+1.60L+0.50S+1.60H	1.481	-Z	Bottom	0.216	Min Temp %	0.40	11.753	OK
X-X, +1.20D+1.60Lr+0.50L+1.60H	0.6926	+Z	Bottom	0.216	Min Temp %	0.40	11.753	OK
X-X, +1.20D+1.60Lr+0.50L+1.60H	0.6926	-Z	Bottom	0.216	Min Temp %	0.40	11.753	OK
X-X, +1.20D+1.60Lr+0.50W+1.60H	0.3345	+Z	Bottom	0.216	Min Temp %	0.40	11.753	OK
X-X, +1.20D+1.60Lr+0.50W+1.60H	0.3345	-Z	Bottom	0.216	Min Temp %	0.40	11.753	OK
X-X, +1.20D+0.50L+1.60S+1.60H	0.6926	+Z	Bottom	0.216	Min Temp %	0.40	11.753	OK
X-X, +1.20D+0.50L+1.60S+1.60H	0.6926	-Z	Bottom	0.216	Min Temp %	0.40	11.753	OK
X-X, +1.20D+1.60S+0.50W+1.60H	0.3345	+Z	Bottom	0.216	Min Temp %	0.40	11.753	OK
X-X, +1.20D+1.60S+0.50W+1.60H	0.3345	-Z	Bottom	0.216	Min Temp %	0.40	11.753	OK
X-X, +1.20D+0.50Lr+0.50L+W+1.60H	0.6926	+Z	Bottom	0.216	Min Temp %	0.40	11.753	OK
X-X, +1.20D+0.50Lr+0.50L+W+1.60H	0.6926	-Z	Bottom	0.216	Min Temp %	0.40	11.753	OK
X-X, +1.20D+0.50L+0.50S+W+1.60H	0.6926	+Z	Bottom	0.216	Min Temp %	0.40	11.753	OK
X-X, +1.20D+0.50L+0.50S+W+1.60H	0.6926	-Z	Bottom	0.216	Min Temp %	0.40	11.753	OK
X-X, +1.20D+0.50L+0.70S+E+1.60H	0.6926	+Z	Bottom	0.216	Min Temp %	0.40	11.753	OK
X-X, +1.20D+0.50L+0.70S+E+1.60H	0.6926	-Z	Bottom	0.216	Min Temp %	0.40	11.753	OK
X-X, +0.90D+W+0.90H	0.2509	+Z	Bottom	0.216	Min Temp %	0.40	11.753	OK
X-X, +0.90D+W+0.90H	0.2509	-Z	Bottom	0.216	Min Temp %	0.40	11.753	OK
X-X, +0.90D+E+0.90H	0.2509	+Z	Bottom	0.216	Min Temp %	0.40	11.753	OK
X-X, +0.90D+E+0.90H	0.2509	-Z	Bottom	0.216	Min Temp %	0.40	11.753	OK
Z-Z, +1.40D+1.60H	0.3903	-X	Bottom	0.216	Min Temp %	0.40	11.753	OK
Z-Z, +1.40D+1.60H	0.3903	+X	Bottom	0.216	Min Temp %	0.40	11.753	OK
Z-Z, +1.20D+0.50Lr+1.60L+1.60H	1.481	-X	Bottom	0.216	Min Temp %	0.40	11.753	OK
Z-Z, +1.20D+0.50Lr+1.60L+1.60H	1.481	+X	Bottom	0.216	Min Temp %	0.40	11.753	OK
Z-Z, +1.20D+1.60L+0.50S+1.60H	1.481	-X	Bottom	0.216	Min Temp %	0.40	11.753	OK
Z-Z, +1.20D+1.60L+0.50S+1.60H	1.481	+X	Bottom	0.216	Min Temp %	0.40	11.753	OK
Z-Z, +1.20D+1.60Lr+0.50L+1.60H	0.6926	-X	Bottom	0.216	Min Temp %	0.40	11.753	OK
Z-Z, +1.20D+1.60Lr+0.50L+1.60H	0.6926	+X	Bottom	0.216	Min Temp %	0.40	11.753	OK
Z-Z, +1.20D+1.60Lr+0.50W+1.60H	0.3345	-X	Bottom	0.216	Min Temp %	0.40	11.753	OK
Z-Z, +1.20D+1.60Lr+0.50W+1.60H	0.3345	+X	Bottom	0.216	Min Temp %	0.40	11.753	OK
Z-Z, +1.20D+0.50L+1.60S+1.60H	0.6926	-X	Bottom	0.216	Min Temp %	0.40	11.753	OK
Z-Z, +1.20D+0.50L+1.60S+1.60H	0.6926	+X	Bottom	0.216	Min Temp %	0.40	11.753	OK
Z-Z, +1.20D+1.60S+0.50W+1.60H	0.3345	-X	Bottom	0.216	Min Temp %	0.40	11.753	OK
Z-Z, +1.20D+1.60S+0.50W+1.60H	0.3345	+X	Bottom	0.216	Min Temp %	0.40	11.753	OK
Z-Z, +1.20D+0.50Lr+0.50L+W+1.60H	0.6926	-X	Bottom	0.216	Min Temp %	0.40	11.753	OK
Z-Z, +1.20D+0.50Lr+0.50L+W+1.60H	0.6926	+X	Bottom	0.216	Min Temp %	0.40	11.753	OK
Z-Z, +1.20D+0.50L+0.50S+W+1.60H	0.6926	-X	Bottom	0.216	Min Temp %	0.40	11.753	OK
Z-Z, +1.20D+0.50L+0.50S+W+1.60H	0.6926	+X	Bottom	0.216	Min Temp %	0.40	11.753	OK
Z-Z, +1.20D+0.50L+0.70S+E+1.60H	0.6926	-X	Bottom	0.216	Min Temp %	0.40	11.753	OK
Z-Z, +1.20D+0.50L+0.70S+E+1.60H	0.6926	+X	Bottom	0.216	Min Temp %	0.40	11.753	OK
Z-Z, +0.90D+W+0.90H	0.2509	-X	Bottom	0.216	Min Temp %	0.40	11.753	OK
Z-Z, +0.90D+W+0.90H	0.2509	+X	Bottom	0.216	Min Temp %	0.40	11.753	OK
Z-Z, +0.90D+E+0.90H	0.2509	-X	Bottom	0.216	Min Temp %	0.40	11.753	OK
Z-Z, +0.90D+E+0.90H	0.2509	+X	Bottom	0.216	Min Temp %	0.40	11.753	OK

One Way Shear

Load Combination...	Vu @ -X	Vu @ +X	Vu @ -Z	Vu @ +Z	Vu:Max	Phi Vn	Vu / Phi*Vn	Status
+1.40D+1.60H	4.026 psi	4.026 psi	4.026 psi	4.026 psi	4.026 psi	75 psi	0.05369	OK
+1.20D+0.50Lr+1.60L+1.60H	15.275 psi	15.275 psi	15.275 psi	15.275 psi	15.275 psi	75 psi	0.2037	OK
+1.20D+1.60L+0.50S+1.60H	15.275 psi	15.275 psi	15.275 psi	15.275 psi	15.275 psi	75 psi	0.2037	OK
+1.20D+1.60Lr+0.50L+1.60H	7.146 psi	7.146 psi	7.146 psi	7.146 psi	7.146 psi	75 psi	0.09528	OK
+1.20D+1.60Lr+0.50W+1.60H	3.451 psi	3.451 psi	3.451 psi	3.451 psi	3.451 psi	75 psi	0.04602	OK
+1.20D+0.50L+1.60S+1.60H	7.146 psi	7.146 psi	7.146 psi	7.146 psi	7.146 psi	75 psi	0.09528	OK
+1.20D+1.60S+0.50W+1.60H	3.451 psi	3.451 psi	3.451 psi	3.451 psi	3.451 psi	75 psi	0.04602	OK
+1.20D+0.50Lr+0.50L+W+1.60H	7.146 psi	7.146 psi	7.146 psi	7.146 psi	7.146 psi	75 psi	0.09528	OK
+1.20D+0.50L+0.50S+W+1.60H	7.146 psi	7.146 psi	7.146 psi	7.146 psi	7.146 psi	75 psi	0.09528	OK
+1.20D+0.50L+0.70S+E+1.60H	7.146 psi	7.146 psi	7.146 psi	7.146 psi	7.146 psi	75 psi	0.09528	OK
+0.90D+W+0.90H	2.588 psi	2.588 psi	2.588 psi	2.588 psi	2.588 psi	75 psi	0.03451	OK
+0.90D+E+0.90H	2.588 psi	2.588 psi	2.588 psi	2.588 psi	2.588 psi	75 psi	0.03451	OK

Whipple Consulting Engineers
2528 N Sullivan Rd
Spokane Valley, WA 99216

Project Title:
Engineer:
Project Descr:

Project ID:

General Footing

File = P:\WCE_WORK\242IDK~9\2MHZA9~D\DBJGBY~H\SEV10W~K\C7A4YC~F\1CFED0~A.EC6
ENERCALC, INC. 1983-2016, Build:6.16.6.7, Ver:6.16.6.7

Lic. # : KW-06009199

Licensee : Whipple Consulting Engineers

Description : F102 (Typical Entryway FTG)

Punching Shear

All units k

Load Combination...	Vu	Phi*Vn	Vu / Phi*Vn	Status
+1.40D+1.60H	14.495 psi	150 psi	0.09663	OK
+1.20D+0.50Lr+1.60L+1.60H	54.99 psi	150 psi	0.3666	OK
+1.20D+1.60L+0.50S+1.60H	54.99 psi	150 psi	0.3666	OK
+1.20D+1.60Lr+0.50L+1.60H	25.726 psi	150 psi	0.1715	OK
+1.20D+1.60Lr+0.50W+1.60H	12.424 psi	150 psi	0.08283	OK
+1.20D+0.50L+1.60S+1.60H	25.726 psi	150 psi	0.1715	OK
+1.20D+1.60S+0.50W+1.60H	12.424 psi	150 psi	0.08283	OK
+1.20D+0.50Lr+0.50L+W+1.60H	25.726 psi	150 psi	0.1715	OK
+1.20D+0.50L+0.50S+W+1.60H	25.726 psi	150 psi	0.1715	OK
+1.20D+0.50L+0.70S+E+1.60H	25.726 psi	150 psi	0.1715	OK
+0.90D+W+0.90H	9.318 psi	150 psi	0.06212	OK
+0.90D+E+0.90H	9.318 psi	150 psi	0.06212	OK

Whipple Consulting Engineers
2528 N Sullivan Rd
Spokane Valley, WA 99216

Project Title:
Engineer:
Project Descr:

Project ID:

General Footing

File = P:\WCE_WORK\242IDK~9\2MHZA9~D\DBJGBY~H\SEV10W~K\C7A4YC~F\1CFED0~A.EC6
ENERCALC, INC. 1983-2016, Build:6.16.6.7, Ver:6.16.6.7

Lic. # : KW-06009199 — Licensee : Whipple Consulting Engineers

Description : F104 (FTG under C105)

Code References

Calculations per ACI 318-11, IBC 2012, CBC 2013, ASCE 7-10
Load Combinations Used : IBC 2012

General Information

Material Properties

f'c : Concrete 28 day strength	=	2.50 ksi
fy : Rebar Yield	=	60.0 ksi
Ec : Concrete Elastic Modulus	=	3,122.0 ksi
Concrete Density	=	145.0 pcf
φ Values Flexure	=	0.90
Shear	=	0.750

Analysis Settings

Min Steel % Bending Reinf.	=	
Min Allow % Temp Reinf.	=	0.00180
Min. Overturning Safety Factor	=	1.0 : 1
Min. Sliding Safety Factor	=	1.0 : 1
Add Ftg Wt for Soil Pressure	:	Yes
Use ftg wt for stability, moments & shears	:	Yes
Add Pedestal Wt for Soil Pressure	:	Yes
Use Pedestal wt for stability, mom & shear	:	No

Soil Design Values

Allowable Soil Bearing	=	3.0 ksf
Increase Bearing By Footing Weight	=	No
Soil Passive Resistance (for Sliding)	=	250.0 pcf
Soil/Concrete Friction Coeff.	=	0.30

Increases based on footing Depth

Footing base depth below soil surface	=	0.0 ft
Allow press. increase per foot of depth	=	0.0 ksf
when footing base is below	=	0.0 ft

Increases based on footing plan dimension

Allowable pressure increase per foot of depth	=	0.0 ksf
when max. length or width is greater than	=	0.0 ft

Dimensions

Width parallel to X-X Axis	=	2.330 ft
Length parallel to Z-Z Axis	=	2.330 ft
Footing Thickness	=	10.0 in

Pedestal dimensions...

px : parallel to X-X Axis	=	18.0 in
pz : parallel to Z-Z Axis	=	18.0 in
Height	=	26.0 in

Rebar Centerline to Edge of Concrete...

at Bottom of footing	=	3.0 in

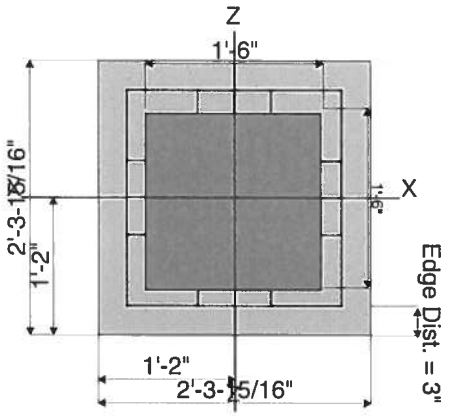

Reinforcing

Bars parallel to X-X Axis			
Number of Bars	=		4.0
Reinforcing Bar Size	=	#	4
Bars parallel to Z-Z Axis			
Number of Bars	=		4.0
Reinforcing Bar Size	=	#	4

Bandwidth Distribution Check (ACI 15.4.4.2)

Direction Requiring Closer Separation	n/a
# Bars required within zone	n/a
# Bars required on each side of zone	n/a

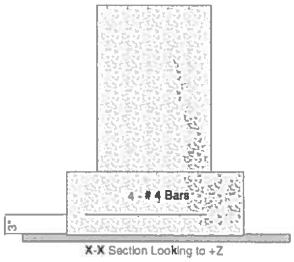

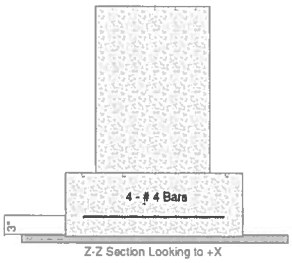

Applied Loads

		D	Lr	L	S	W	E	H
P : Column Load	=	4.284	0.0	8.060	0.0	0.0	0.0	0.0 k
OB : Overburden	=	0.0	0.0	0.0	0.0	0.0	0.0	0.0 ksf
M-xx	=	0.0	0.0	0.0	0.0	0.0	0.0	0.0 k-ft
M-zz	=	0.0	0.0	0.0	0.0	0.0	0.0	0.0 k-ft
V-x	=	0.0	0.0	0.0	0.0	0.0	0.0	0.0 k
V-z	=	0.0	0.0	0.0	0.0	0.0	0.0	0.0 k

Whipple Consulting Engineers
2528 N Sullivan Rd
Spokane Valley, WA 99216

Project Title:
Engineer:
Project Descr:

Project ID:

General Footing

File = P:\WCE_WORK\242IDK~9\2MHZA9~D\DBJGBY~H\SEV10W~K\C7A4YC~F\1CFED0~A.EC6
ENERCALC, INC. 1983-2016, Build:6.16.6.7, Ver:6.16.6.7

Lic. # : KW-06009199

Licensee : Whipple Consulting Engineers

Description : F104 (FTG under C105)

DESIGN SUMMARY

Design OK

	Min. Ratio	Item	Applied	Capacity	Governing Load Combination
PASS	0.8417	Soil Bearing	2.525 ksf	3.0 ksf	+D+L+H about Z-Z axis
PASS	n/a	Overturning - X-X	0.0 k-ft	0.0 k-ft	No Overturning
PASS	n/a	Overturning - Z-Z	0.0 k-ft	0.0 k-ft	No Overturning
PASS	n/a	Sliding - X-X	0.0 k	0.0 k	No Sliding
PASS	n/a	Sliding - Z-Z	0.0 k	0.0 k	No Sliding
PASS	n/a	Uplift	0.0 k	0.0 k	No Uplift
PASS	0.02937	Z Flexure (+X)	0.2993 k-ft	10.191 k-ft	+1.20D+0.50Lr+1.60L+1.60H
PASS	0.02937	Z Flexure (-X)	0.2993 k-ft	10.191 k-ft	+1.20D+0.50Lr+1.60L+1.60H
PASS	0.02937	X Flexure (+Z)	0.2993 k-ft	10.191 k-ft	+1.20D+0.50Lr+1.60L+1.60H
PASS	0.02937	X Flexure (-Z)	0.2993 k-ft	10.191 k-ft	+1.20D+0.50Lr+1.60L+1.60H
PASS	n/a	1-way Shear (+X)	0.0 psi	75.0 psi	n/a
PASS	0.0	1-way Shear (-X)	0.0 psi	0.0 psi	n/a
PASS	n/a	1-way Shear (+Z)	0.0 psi	75.0 psi	n/a
PASS	n/a	1-way Shear (-Z)	0.0 psi	75.0 psi	n/a
PASS	n/a	2-way Punching	5.126 psi	75.0 psi	+1.20D+0.50Lr+1.60L+1.60H

Detailed Results

Soil Bearing

Rotation Axis & Load Combination...	Gross Allowable	Xecc (in)	Zecc (in)	Actual Soil Bearing Stress @ Location: Bottom, -Z	Top, +Z	Left, -X	Right, +X	Actual / Allow Ratio
X-X, +D+H	3.0	n/a	0.0	1.040	1.040	n/a	n/a	0.347
X-X, +D+L+H	3.0	n/a	0.0	2.525	2.525	n/a	n/a	0.842
X-X, +D+Lr+H	3.0	n/a	0.0	1.040	1.040	n/a	n/a	0.347
X-X, +D+S+H	3.0	n/a	0.0	1.040	1.040	n/a	n/a	0.347
X-X, +D+0.750Lr+0.750L+H	3.0	n/a	0.0	2.154	2.154	n/a	n/a	0.718
X-X, +D+0.750L+0.750S+H	3.0	n/a	0.0	2.154	2.154	n/a	n/a	0.718
X-X, +D+0.60W+H	3.0	n/a	0.0	1.040	1.040	n/a	n/a	0.347
X-X, +D+0.70E+H	3.0	n/a	0.0	1.040	1.040	n/a	n/a	0.347
X-X, +D+0.750Lr+0.750L+0.450W+H	3.0	n/a	0.0	2.154	2.154	n/a	n/a	0.718
X-X, +D+0.750L+0.750S+0.450W+H	3.0	n/a	0.0	2.154	2.154	n/a	n/a	0.718
X-X, +D+0.750L+0.750S+0.5250E+H	3.0	n/a	0.0	2.154	2.154	n/a	n/a	0.718
X-X, +0.60D+0.60W+0.60H	3.0	n/a	0.0	0.6241	0.6241	n/a	n/a	0.208
X-X, +0.60D+0.70E+0.60H	3.0	n/a	0.0	0.6241	0.6241	n/a	n/a	0.208
Z-Z, +D+H	3.0	0.0	n/a	n/a	n/a	1.040	1.040	0.347
Z-Z, +D+L+H	3.0	0.0	n/a	n/a	n/a	2.525	2.525	0.842
Z-Z, +D+Lr+H	3.0	0.0	n/a	n/a	n/a	1.040	1.040	0.347
Z-Z, +D+S+H	3.0	0.0	n/a	n/a	n/a	1.040	1.040	0.347
Z-Z, +D+0.750Lr+0.750L+H	3.0	0.0	n/a	n/a	n/a	2.154	2.154	0.718
Z-Z, +D+0.750L+0.750S+H	3.0	0.0	n/a	n/a	n/a	2.154	2.154	0.718
Z-Z, +D+0.60W+H	3.0	0.0	n/a	n/a	n/a	1.040	1.040	0.347
Z-Z, +D+0.70E+H	3.0	0.0	n/a	n/a	n/a	1.040	1.040	0.347
Z-Z, +D+0.750Lr+0.750L+0.450W+H	3.0	0.0	n/a	n/a	n/a	2.154	2.154	0.718
Z-Z, +D+0.750L+0.750S+0.450W+H	3.0	0.0	n/a	n/a	n/a	2.154	2.154	0.718
Z-Z, +D+0.750L+0.750S+0.5250E+H	3.0	0.0	n/a	n/a	n/a	2.154	2.154	0.718
Z-Z, +0.60D+0.60W+0.60H	3.0	0.0	n/a	n/a	n/a	0.6241	0.6241	0.208
Z-Z, +0.60D+0.70E+0.60H	3.0	0.0	n/a	n/a	n/a	0.6241	0.6241	0.208

Overturning Stability

Rotation Axis & Load Combination...	Overturning Moment	Resisting Moment	Stability Ratio	Status
Footing Has NO Overturning				

All units k

Sliding Stability

Force Application Axis Load Combination...	Sliding Force	Resisting Force	Stability Ratio	Status
Footing Has NO Sliding				

Whipple Consulting Engineers
2528 N Sullivan Rd
Spokane Valley, WA 99216

Project Title:
Engineer:
Project Descr:

Project ID:

General Footing

File = P:\WCE_WORK\242IDK~9\2MHZA9~D\DBJGBY~H\SEV10W~K\C7A4YC~F\1CFED0~A.EC6
ENERCALC, INC. 1983-2016, Build:6.16.6.7, Ver:6.16.6.7

Lic. # : KW-06009199
Licensee : Whipple Consulting Engineers

Description : F104 (FTG under C105)

Footing Flexure

Flexure Axis & Load Combination	Mu k-ft	Side	Tension Surface	As Req'd in^2	Gvrn. As in^2	Actual As in^2	Phi*Mn k-ft	Status
X-X, +1.40D+1.60H	0.1107	+Z	Bottom	0.216	Min Temp %	0.3433	10.191	OK

Whipple Consulting Engineers
2528 N Sullivan Rd
Spokane Valley, WA 99216

Project Title:
Engineer:
Project Descr:

Project ID:

General Footing

File = P:\WCE_WORK\242IDK~9\2MHZA9~D\DBJGBY~H\SEV10W~K\C7A4YC~F\1CFED0~A.EC6
ENERCALC, INC. 1983-2016, Build:6.16.6.7, Ver:6.16.6.7

Lic. # : KW-06009199 — Licensee : Whipple Consulting Engineers

Description : F104 (FTG under C105)

Footing Flexure

Flexure Axis & Load Combination	Mu k-ft	Side	Tension Surface	As Req'd in^2	Gvrn. As in^2	Actual As in^2	Phi*Mn k-ft	Status
X-X, +1.40D+1.60H	0.1107	-Z	Bottom	0.216	Min Temp %	0.3433	10.191	OK
X-X, +1.20D+0.50Lr+1.60L+1.60H	0.2993	+Z	Bottom	0.216	Min Temp %	0.3433	10.191	OK
X-X, +1.20D+0.50Lr+1.60L+1.60H	0.2993	-Z	Bottom	0.216	Min Temp %	0.3433	10.191	OK
X-X, +1.20D+1.60L+0.50S+1.60H	0.2993	+Z	Bottom	0.216	Min Temp %	0.3433	10.191	OK
X-X, +1.20D+1.60L+0.50S+1.60H	0.2993	-Z	Bottom	0.216	Min Temp %	0.3433	10.191	OK
X-X, +1.20D+1.60Lr+0.50L+1.60H	0.1588	+Z	Bottom	0.216	Min Temp %	0.3433	10.191	OK
X-X, +1.20D+1.60Lr+0.50L+1.60H	0.1588	-Z	Bottom	0.216	Min Temp %	0.3433	10.191	OK
X-X, +1.20D+1.60Lr+0.50W+1.60H	0.09492	+Z	Bottom	0.216	Min Temp %	0.3433	10.191	OK
X-X, +1.20D+1.60Lr+0.50W+1.60H	0.09492	-Z	Bottom	0.216	Min Temp %	0.3433	10.191	OK
X-X, +1.20D+0.50L+1.60S+1.60H	0.1588	+Z	Bottom	0.216	Min Temp %	0.3433	10.191	OK
X-X, +1.20D+0.50L+1.60S+1.60H	0.1588	-Z	Bottom	0.216	Min Temp %	0.3433	10.191	OK
X-X, +1.20D+1.60S+0.50W+1.60H	0.09492	+Z	Bottom	0.216	Min Temp %	0.3433	10.191	OK
X-X, +1.20D+1.60S+0.50W+1.60H	0.09492	-Z	Bottom	0.216	Min Temp %	0.3433	10.191	OK
X-X, +1.20D+0.50Lr+0.50L+W+1.60H	0.1588	+Z	Bottom	0.216	Min Temp %	0.3433	10.191	OK
X-X, +1.20D+0.50Lr+0.50L+W+1.60H	0.1588	-Z	Bottom	0.216	Min Temp %	0.3433	10.191	OK
X-X, +1.20D+0.50L+0.50S+W+1.60H	0.1588	+Z	Bottom	0.216	Min Temp %	0.3433	10.191	OK
X-X, +1.20D+0.50L+0.50S+W+1.60H	0.1588	-Z	Bottom	0.216	Min Temp %	0.3433	10.191	OK
X-X, +1.20D+0.50L+0.70S+E+1.60H	0.1588	+Z	Bottom	0.216	Min Temp %	0.3433	10.191	OK
X-X, +1.20D+0.50L+0.70S+E+1.60H	0.1588	-Z	Bottom	0.216	Min Temp %	0.3433	10.191	OK
X-X, +0.90D+W+0.90H	0.07119	+Z	Bottom	0.216	Min Temp %	0.3433	10.191	OK
X-X, +0.90D+W+0.90H	0.07119	-Z	Bottom	0.216	Min Temp %	0.3433	10.191	OK
X-X, +0.90D+E+0.90H	0.07119	+Z	Bottom	0.216	Min Temp %	0.3433	10.191	OK
X-X, +0.90D+E+0.90H	0.07119	-Z	Bottom	0.216	Min Temp %	0.3433	10.191	OK
Z-Z, +1.40D+1.60H	0.1107	-X	Bottom	0.216	Min Temp %	0.3433	10.191	OK
Z-Z, +1.40D+1.60H	0.1107	+X	Bottom	0.216	Min Temp %	0.3433	10.191	OK
Z-Z, +1.20D+0.50Lr+1.60L+1.60H	0.2993	-X	Bottom	0.216	Min Temp %	0.3433	10.191	OK
Z-Z, +1.20D+0.50Lr+1.60L+1.60H	0.2993	+X	Bottom	0.216	Min Temp %	0.3433	10.191	OK
Z-Z, +1.20D+1.60L+0.50S+1.60H	0.2993	-X	Bottom	0.216	Min Temp %	0.3433	10.191	OK
Z-Z, +1.20D+1.60L+0.50S+1.60H	0.2993	+X	Bottom	0.216	Min Temp %	0.3433	10.191	OK
Z-Z, +1.20D+1.60Lr+0.50L+1.60H	0.1588	-X	Bottom	0.216	Min Temp %	0.3433	10.191	OK
Z-Z, +1.20D+1.60Lr+0.50L+1.60H	0.1588	+X	Bottom	0.216	Min Temp %	0.3433	10.191	OK
Z-Z, +1.20D+1.60Lr+0.50W+1.60H	0.09492	-X	Bottom	0.216	Min Temp %	0.3433	10.191	OK
Z-Z, +1.20D+1.60Lr+0.50W+1.60H	0.09492	+X	Bottom	0.216	Min Temp %	0.3433	10.191	OK
Z-Z, +1.20D+0.50L+1.60S+1.60H	0.1588	-X	Bottom	0.216	Min Temp %	0.3433	10.191	OK
Z-Z, +1.20D+0.50L+1.60S+1.60H	0.1588	+X	Bottom	0.216	Min Temp %	0.3433	10.191	OK
Z-Z, +1.20D+1.60S+0.50W+1.60H	0.09492	-X	Bottom	0.216	Min Temp %	0.3433	10.191	OK
Z-Z, +1.20D+1.60S+0.50W+1.60H	0.09492	+X	Bottom	0.216	Min Temp %	0.3433	10.191	OK
Z-Z, +1.20D+0.50Lr+0.50L+W+1.60H	0.1588	-X	Bottom	0.216	Min Temp %	0.3433	10.191	OK
Z-Z, +1.20D+0.50Lr+0.50L+W+1.60H	0.1588	+X	Bottom	0.216	Min Temp %	0.3433	10.191	OK
Z-Z, +1.20D+0.50L+0.50S+W+1.60H	0.1588	-X	Bottom	0.216	Min Temp %	0.3433	10.191	OK
Z-Z, +1.20D+0.50L+0.50S+W+1.60H	0.1588	+X	Bottom	0.216	Min Temp %	0.3433	10.191	OK
Z-Z, +1.20D+0.50L+0.70S+E+1.60H	0.1588	-X	Bottom	0.216	Min Temp %	0.3433	10.191	OK
Z-Z, +1.20D+0.50L+0.70S+E+1.60H	0.1588	+X	Bottom	0.216	Min Temp %	0.3433	10.191	OK
Z-Z, +0.90D+W+0.90H	0.07119	-X	Bottom	0.216	Min Temp %	0.3433	10.191	OK
Z-Z, +0.90D+W+0.90H	0.07119	+X	Bottom	0.216	Min Temp %	0.3433	10.191	OK
Z-Z, +0.90D+E+0.90H	0.07119	-X	Bottom	0.216	Min Temp %	0.3433	10.191	OK
Z-Z, +0.90D+E+0.90H	0.07119	+X	Bottom	0.216	Min Temp %	0.3433	10.191	OK

One Way Shear

Load Combination...	Vu @ -X	Vu @ +X	Vu @ -Z	Vu @ +Z	Vu:Max	Phi Vn	Vu / Phi*Vn	Status
+1.40D+1.60H	0 psi	0 psi	0 psi	0 psi	0 psi	75 psi	0	OK
+1.20D+0.50Lr+1.60L+1.60H	0 psi	0 psi	0 psi	0 psi	0 psi	75 psi	0	OK
+1.20D+1.60L+0.50S+1.60H	0 psi	0 psi	0 psi	0 psi	0 psi	75 psi	0	OK
+1.20D+1.60Lr+0.50L+1.60H	0 psi	0 psi	0 psi	0 psi	0 psi	75 psi	0	OK
+1.20D+1.60Lr+0.50W+1.60H	0 psi	0 psi	0 psi	0 psi	0 psi	75 psi	0	OK
+1.20D+0.50L+1.60S+1.60H	0 psi	0 psi	0 psi	0 psi	0 psi	75 psi	0	OK
+1.20D+1.60S+0.50W+1.60H	0 psi	0 psi	0 psi	0 psi	0 psi	75 psi	0	OK
+1.20D+0.50Lr+0.50L+W+1.60H	0 psi	0 psi	0 psi	0 psi	0 psi	75 psi	0	OK
+1.20D+0.50L+0.50S+W+1.60H	0 psi	0 psi	0 psi	0 psi	0 psi	75 psi	0	OK
+1.20D+0.50L+0.70S+E+1.60H	0 psi	0 psi	0 psi	0 psi	0 psi	75 psi	0	OK
+0.90D+W+0.90H	0 psi	0 psi	0 psi	0 psi	0 psi	75 psi	0	OK
+0.90D+E+0.90H	0 psi	0 psi	0 psi	0 psi	0 psi	75 psi	0	OK

Whipple Consulting Engineers
2528 N Sullivan Rd
Spokane Valley, WA 99216

Project Title:
Engineer:
Project Descr:

Project ID:

General Footing

File = P:\WCE_WORK\242IDK~9\2MHZA9~D\DBJGBY~H\SEV10W~K\C7A4YC~F\1CFED0~A.EC6
ENERCALC, INC. 1983-2016, Build:6.16.6.7, Ver:6.16.6.7

Lic. # : KW-06009199 — Licensee : Whipple Consulting Engineers

Description : F104 (FTG under C105)

Punching Shear

All units k

Load Combination...	Vu	Phi*Vn	Vu / Phi*Vn	Status
+1.40D+1.60H	1.897 psi	150 psi	0.01264	OK
+1.20D+0.50Lr+1.60L+1.60H	5.126 psi	150 psi	0.03417	OK
+1.20D+1.60L+0.50S+1.60H	5.126 psi	150 psi	0.03417	OK
+1.20D+1.60Lr+0.50L+1.60H	2.719 psi	150 psi	0.01813	OK
+1.20D+1.60Lr+0.50W+1.60H	1.626 psi	150 psi	0.01084	OK
+1.20D+0.50L+1.60S+1.60H	2.719 psi	150 psi	0.01813	OK
+1.20D+1.60S+0.50W+1.60H	1.626 psi	150 psi	0.01084	OK
+1.20D+0.50Lr+0.50L+W+1.60H	2.719 psi	150 psi	0.01813	OK
+1.20D+0.50L+0.50S+W+1.60H	2.719 psi	150 psi	0.01813	OK
+1.20D+0.50L+0.70S+E+1.60H	2.719 psi	150 psi	0.01813	OK
+0.90D+W+0.90H	1.219 psi	150 psi	0.008128	OK
+0.90D+E+0.90H	1.219 psi	150 psi	0.008128	OK

Whipple Consulting Engineers
2528 N Sullivan Rd
Spokane Valley, WA 99216

Project Title:
Engineer:
Project Descr:

Project ID:

General Footing

File = P:\WCE_WORK\242IDK~9\2MHZA9~D\DBJGBY~H\SEV10W~K\C7A4YC~F\1CFED0~A.EC6
ENERCALC, INC. 1983-2016, Build:6.16.6.7, Ver:6.16.6.7

Lic. # : KW-06009199 — Licensee : Whipple Consulting Engineers

Description : F105 (FTG under C106)

Code References

Calculations per ACI 318-11, IBC 2012, CBC 2013, ASCE 7-10
Load Combinations Used : IBC 2012

General Information

Material Properties

f'c : Concrete 28 day strength	=	2.50 ksi
fy : Rebar Yield	=	60.0 ksi
Ec : Concrete Elastic Modulus	=	3,122.0 ksi
Concrete Density	=	145.0 pcf
φ Values Flexure	=	0.90
Shear	=	0.750

Analysis Settings

Min Steel % Bending Reinf.	=	
Min Allow % Temp Reinf.	=	0.00180
Min. Overturning Safety Factor	=	1.0 : 1
Min. Sliding Safety Factor	=	1.0 : 1
Add Ftg Wt for Soil Pressure	:	Yes
Use ftg wt for stability, moments & shears	:	Yes
Add Pedestal Wt for Soil Pressure	:	Yes
Use Pedestal wt for stability, mom & shear	:	No

Soil Design Values

Allowable Soil Bearing	=	3.0 ksf
Increase Bearing By Footing Weight	=	No
Soil Passive Resistance (for Sliding)	=	250.0 pcf
Soil/Concrete Friction Coeff.	=	0.30

Increases based on footing Depth

Footing base depth below soil surface	=	0.0 ft
Allow press. increase per foot of depth	=	0.0 ksf
when footing base is below	=	0.0 ft

Increases based on footing plan dimension

Allowable pressure increase per foot of depth	=	0.0 ksf
when max. length or width is greater than	=	0.0 ft

Dimensions

Width parallel to X-X Axis	=	2.330 ft
Length parallel to Z-Z Axis	=	2.330 ft
Footing Thickness	=	10.0 in

Pedestal dimensions...

px : parallel to X-X Axis	=	0.0 in
pz : parallel to Z-Z Axis	=	0.0 in
Height	=	0.0 in

Rebar Centerline to Edge of Concrete...

at Bottom of footing	=	3.0 in

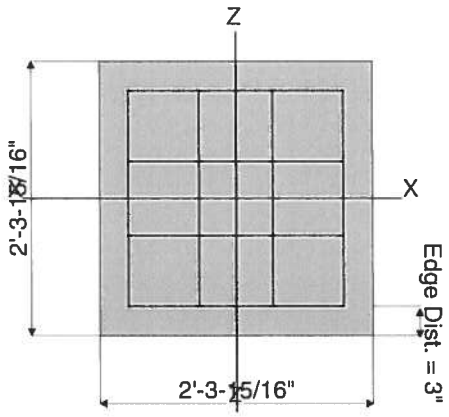

Reinforcing

Bars parallel to X-X Axis		
Number of Bars	=	4.0
Reinforcing Bar Size	=	# 4
Bars parallel to Z-Z Axis		
Number of Bars	=	4.0
Reinforcing Bar Size	=	# 4

Bandwidth Distribution Check (ACI 15.4.4.2)

Direction Requiring Closer Separation	n/a
# Bars required within zone	n/a
# Bars required on each side of zone	n/a

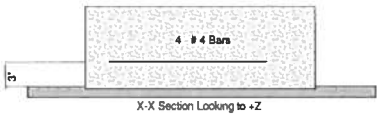

X-X Section Looking to +Z

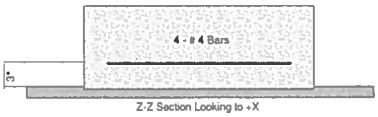

Z-Z Section Looking to +X

Applied Loads

		D	Lr	L	S	W	E	H
P : Column Load	=	1.920	0.0	2.950	0.0	0.0	0.0	0.0 k
OB : Overburden	=	0.0	0.0	0.0	0.0	0.0	0.0	0.0 ksf
M-xx	=	0.0	0.0	0.0	0.0	0.0	0.0	0.0 k-ft
M-zz	=	0.0	0.0	0.0	0.0	0.0	0.0	0.0 k-ft
V-x	=	0.0	0.0	0.0	0.0	0.0	0.0	0.0 k
V-z	=	0.0	0.0	0.0	0.0	0.0	0.0	0.0 k

Whipple Consulting Engineers
2528 N Sullivan Rd
Spokane Valley, WA 99216

Project Title:
Engineer:
Project Descr:

Project ID:

General Footing

File = P:\WCE_WORK\242IDK~9\2MHZA9~D\DBJGBY~H\SEV10W~K\C7A4YC~F\1CFED0~A.EC6
ENERCALC, INC. 1983-2016, Build:6.16.6.7, Ver:6.16.6.7

Lic. # : KW-06009199 — Licensee : Whipple Consulting Engineers

Description : F105 (FTG under C106)

DESIGN SUMMARY

Design OK

	Min. Ratio	Item	Applied	Capacity	Governing Load Combination
PASS	0.3393	Soil Bearing	1.018 ksf	3.0 ksf	+D+L+H about Z-Z axis
PASS	n/a	Overturning - X-X	0.0 k-ft	0.0 k-ft	No Overturning
PASS	n/a	Overturning - Z-Z	0.0 k-ft	0.0 k-ft	No Overturning
PASS	n/a	Sliding - X-X	0.0 k	0.0 k	No Sliding
PASS	n/a	Sliding - Z-Z	0.0 k	0.0 k	No Sliding
PASS	n/a	Uplift	0.0 k	0.0 k	No Uplift
PASS	0.08615	Z Flexure (+X)	0.8780 k-ft	10.191 k-ft	+1.20D+0.50Lr+1.60L+1.60H
PASS	0.08615	Z Flexure (-X)	0.8780 k-ft	10.191 k-ft	+1.20D+0.50Lr+1.60L+1.60H
PASS	0.08615	X Flexure (+Z)	0.8780 k-ft	10.191 k-ft	+1.20D+0.50Lr+1.60L+1.60H
PASS	0.08615	X Flexure (-Z)	0.8780 k-ft	10.191 k-ft	+1.20D+0.50Lr+1.60L+1.60H
PASS	0.1196	1-way Shear (+X)	8.972 psi	75.0 psi	+1.20D+0.50Lr+1.60L+1.60H
PASS	0.1196	1-way Shear (-X)	8.972 psi	75.0 psi	+1.20D+0.50Lr+1.60L+1.60H
PASS	0.1196	1-way Shear (+Z)	8.972 psi	75.0 psi	+1.20D+0.50Lr+1.60L+1.60H
PASS	0.1196	1-way Shear (-Z)	8.972 psi	75.0 psi	+1.20D+0.50Lr+1.60L+1.60H
PASS	0.2219	2-way Punching	33.288 psi	150.0 psi	+1.20D+0.50Lr+1.60L+1.60H

Detailed Results

Soil Bearing

Rotation Axis & Load Combination...	Gross Allowable	Xecc (in)	Zecc (in)	Actual Soil Bearing Stress @ Location: Bottom, -Z	Top, +Z	Left, -X	Right, +X	Actual / Allow Ratio
X-X, +D+H	3.0	n/a	0.0	0.4745	0.4745	n/a	n/a	0.158
X-X, +D+L+H	3.0	n/a	0.0	1.018	1.018	n/a	n/a	0.339
X-X, +D+Lr+H	3.0	n/a	0.0	0.4745	0.4745	n/a	n/a	0.158
X-X, +D+S+H	3.0	n/a	0.0	0.4745	0.4745	n/a	n/a	0.158
X-X, +D+0.750Lr+0.750L+H	3.0	n/a	0.0	0.8820	0.8820	n/a	n/a	0.294
X-X, +D+0.750L+0.750S+H	3.0	n/a	0.0	0.8820	0.8820	n/a	n/a	0.294
X-X, +D+0.60W+H	3.0	n/a	0.0	0.4745	0.4745	n/a	n/a	0.158
X-X, +D+0.70E+H	3.0	n/a	0.0	0.4745	0.4745	n/a	n/a	0.158
X-X, +D+0.750Lr+0.750L+0.450W+H	3.0	n/a	0.0	0.8820	0.8820	n/a	n/a	0.294
X-X, +D+0.750L+0.750S+0.450W+H	3.0	n/a	0.0	0.8820	0.8820	n/a	n/a	0.294
X-X, +D+0.750L+0.750S+0.5250E+H	3.0	n/a	0.0	0.8820	0.8820	n/a	n/a	0.294
X-X, +0.60D+0.60W+0.60H	3.0	n/a	0.0	0.2847	0.2847	n/a	n/a	0.095
X-X, +0.60D+0.70E+0.60H	3.0	n/a	0.0	0.2847	0.2847	n/a	n/a	0.095
Z-Z, +D+H	3.0	0.0	n/a	n/a	n/a	0.4745	0.4745	0.158
Z-Z, +D+L+H	3.0	0.0	n/a	n/a	n/a	1.018	1.018	0.339
Z-Z, +D+Lr+H	3.0	0.0	n/a	n/a	n/a	0.4745	0.4745	0.158
Z-Z, +D+S+H	3.0	0.0	n/a	n/a	n/a	0.4745	0.4745	0.158
Z-Z, +D+0.750Lr+0.750L+H	3.0	0.0	n/a	n/a	n/a	0.8820	0.8820	0.294
Z-Z, +D+0.750L+0.750S+H	3.0	0.0	n/a	n/a	n/a	0.8820	0.8820	0.294
Z-Z, +D+0.60W+H	3.0	0.0	n/a	n/a	n/a	0.4745	0.4745	0.158
Z-Z, +D+0.70E+H	3.0	0.0	n/a	n/a	n/a	0.4745	0.4745	0.158
Z-Z, +D+0.750Lr+0.750L+0.450W+H	3.0	0.0	n/a	n/a	n/a	0.8820	0.8820	0.294
Z-Z, +D+0.750L+0.750S+0.450W+H	3.0	0.0	n/a	n/a	n/a	0.8820	0.8820	0.294
Z-Z, +D+0.750L+0.750S+0.5250E+H	3.0	0.0	n/a	n/a	n/a	0.8820	0.8820	0.294
Z-Z, +0.60D+0.60W+0.60H	3.0	0.0	n/a	n/a	n/a	0.2847	0.2847	0.095
Z-Z, +0.60D+0.70E+0.60H	3.0	0.0	n/a	n/a	n/a	0.2847	0.2847	0.095

Overturning Stability

Rotation Axis & Load Combination...	Overturning Moment	Resisting Moment	Stability Ratio	Status
Footing Has NO Overturning				

All units k

Sliding Stability

Force Application Axis Load Combination...	Sliding Force	Resisting Force	Stability Ratio	Status
Footing Has NO Sliding				

Whipple Consulting Engineers
2528 N Sullivan Rd
Spokane Valley, WA 99216

Project Title:
Engineer:
Project Descr:

Project ID:

General Footing

File = P:\WCE_WORK\242IDK~9\2MHZA9~D\DBJGBY~H\SEV10W~K\C7A4YC~F\1CFED0~A.EC6
ENERCALC, INC. 1983-2016, Build:6.16.6.7, Ver:6.16.6.7

Lic. # : KW-06009199 — Licensee : Whipple Consulting Engineers

Description : F105 (FTG under C106)

Footing Flexure

Flexure Axis & Load Combination	Mu k-ft	Side	Tension Surface	As Req'd in^2	Gvrn. As in^2	Actual As in^2	Phi*Mn k-ft	Status
X-X, +1.40D+1.60H	0.3360	+Z	Bottom	0.216	Min Temp %	0.3433	10.191	OK

Whipple Consulting Engineers
2528 N Sullivan Rd
Spokane Valley, WA 99216

Project Title:
Engineer:
Project Descr:

Project ID:

General Footing

File = P:\WCE_WORK\242IDK~9\2MHZA9~D\DBJGBY~H\SEV10W~K\C7A4YC~F\1CFED0~A.EC6
ENERCALC, INC. 1983-2016, Build:6.16.6.7, Ver:6.16.6.7

Lic. # : KW-06009199

Licensee : Whipple Consulting Engineers

Description : F105 (FTG under C106)

Footing Flexure

Flexure Axis & Load Combination	Mu k-ft	Side	Tension Surface	As Req'd in^2	Gvrn. As in^2	Actual As in^2	Phi*Mn k-ft	Status
X-X. +1.40D+1.60H	0.3360	-Z	Bottom	0.216	Min Temp %	0.3433	10.191	OK
X-X. +1.20D+0.50Lr+1.60L+1.60H	0.8780	+Z	Bottom	0.216	Min Temp %	0.3433	10.191	OK
X-X. +1.20D+0.50Lr+1.60L+1.60H	0.8780	-Z	Bottom	0.216	Min Temp %	0.3433	10.191	OK
X-X. +1.20D+1.60L+0.50S+1.60H	0.8780	+Z	Bottom	0.216	Min Temp %	0.3433	10.191	OK
X-X. +1.20D+1.60L+0.50S+1.60H	0.8780	-Z	Bottom	0.216	Min Temp %	0.3433	10.191	OK
X-X. +1.20D+1.60Lr+0.50L+1.60H	0.4724	+Z	Bottom	0.216	Min Temp %	0.3433	10.191	OK
X-X. +1.20D+1.60Lr+0.50L+1.60H	0.4724	-Z	Bottom	0.216	Min Temp %	0.3433	10.191	OK
X-X. +1.20D+1.60Lr+0.50W+1.60H	0.2880	+Z	Bottom	0.216	Min Temp %	0.3433	10.191	OK
X-X. +1.20D+1.60Lr+0.50W+1.60H	0.2880	-Z	Bottom	0.216	Min Temp %	0.3433	10.191	OK
X-X. +1.20D+0.50L+1.60S+1.60H	0.4724	+Z	Bottom	0.216	Min Temp %	0.3433	10.191	OK
X-X. +1.20D+0.50L+1.60S+1.60H	0.4724	-Z	Bottom	0.216	Min Temp %	0.3433	10.191	OK
X-X. +1.20D+1.60S+0.50W+1.60H	0.2880	+Z	Bottom	0.216	Min Temp %	0.3433	10.191	OK
X-X. +1.20D+1.60S+0.50W+1.60H	0.2880	-Z	Bottom	0.216	Min Temp %	0.3433	10.191	OK
X-X. +1.20D+0.50Lr+0.50L+W+1.60H	0.4724	+Z	Bottom	0.216	Min Temp %	0.3433	10.191	OK
X-X. +1.20D+0.50Lr+0.50L+W+1.60H	0.4724	-Z	Bottom	0.216	Min Temp %	0.3433	10.191	OK
X-X. +1.20D+0.50L+0.50S+W+1.60H	0.4724	+Z	Bottom	0.216	Min Temp %	0.3433	10.191	OK
X-X. +1.20D+0.50L+0.50S+W+1.60H	0.4724	-Z	Bottom	0.216	Min Temp %	0.3433	10.191	OK
X-X. +1.20D+0.50L+0.70S+E+1.60H	0.4724	+Z	Bottom	0.216	Min Temp %	0.3433	10.191	OK
X-X. +1.20D+0.50L+0.70S+E+1.60H	0.4724	-Z	Bottom	0.216	Min Temp %	0.3433	10.191	OK
X-X. +0.90D+W+0.90H	0.2160	+Z	Bottom	0.216	Min Temp %	0.3433	10.191	OK
X-X. +0.90D+W+0.90H	0.2160	-Z	Bottom	0.216	Min Temp %	0.3433	10.191	OK
X-X. +0.90D+E+0.90H	0.2160	+Z	Bottom	0.216	Min Temp %	0.3433	10.191	OK
X-X. +0.90D+E+0.90H	0.2160	-Z	Bottom	0.216	Min Temp %	0.3433	10.191	OK
Z-Z. +1.40D+1.60H	0.3360	-X	Bottom	0.216	Min Temp %	0.3433	10.191	OK
Z-Z. +1.40D+1.60H	0.3360	+X	Bottom	0.216	Min Temp %	0.3433	10.191	OK
Z-Z. +1.20D+0.50Lr+1.60L+1.60H	0.8780	-X	Bottom	0.216	Min Temp %	0.3433	10.191	OK
Z-Z. +1.20D+0.50Lr+1.60L+1.60H	0.8780	+X	Bottom	0.216	Min Temp %	0.3433	10.191	OK
Z-Z. +1.20D+1.60L+0.50S+1.60H	0.8780	-X	Bottom	0.216	Min Temp %	0.3433	10.191	OK
Z-Z. +1.20D+1.60L+0.50S+1.60H	0.8780	+X	Bottom	0.216	Min Temp %	0.3433	10.191	OK
Z-Z. +1.20D+1.60Lr+0.50L+1.60H	0.4724	-X	Bottom	0.216	Min Temp %	0.3433	10.191	OK
Z-Z. +1.20D+1.60Lr+0.50L+1.60H	0.4724	+X	Bottom	0.216	Min Temp %	0.3433	10.191	OK
Z-Z. +1.20D+1.60Lr+0.50W+1.60H	0.2880	-X	Bottom	0.216	Min Temp %	0.3433	10.191	OK
Z-Z. +1.20D+1.60Lr+0.50W+1.60H	0.2880	+X	Bottom	0.216	Min Temp %	0.3433	10.191	OK
Z-Z. +1.20D+0.50L+1.60S+1.60H	0.4724	-X	Bottom	0.216	Min Temp %	0.3433	10.191	OK
Z-Z. +1.20D+0.50L+1.60S+1.60H	0.4724	+X	Bottom	0.216	Min Temp %	0.3433	10.191	OK
Z-Z. +1.20D+1.60S+0.50W+1.60H	0.2880	-X	Bottom	0.216	Min Temp %	0.3433	10.191	OK
Z-Z. +1.20D+1.60S+0.50W+1.60H	0.2880	+X	Bottom	0.216	Min Temp %	0.3433	10.191	OK
Z-Z. +1.20D+0.50Lr+0.50L+W+1.60H	0.4724	-X	Bottom	0.216	Min Temp %	0.3433	10.191	OK
Z-Z. +1.20D+0.50Lr+0.50L+W+1.60H	0.4724	+X	Bottom	0.216	Min Temp %	0.3433	10.191	OK
Z-Z. +1.20D+0.50L+0.50S+W+1.60H	0.4724	-X	Bottom	0.216	Min Temp %	0.3433	10.191	OK
Z-Z. +1.20D+0.50L+0.50S+W+1.60H	0.4724	+X	Bottom	0.216	Min Temp %	0.3433	10.191	OK
Z-Z. +1.20D+0.50L+0.70S+E+1.60H	0.4724	-X	Bottom	0.216	Min Temp %	0.3433	10.191	OK
Z-Z. +1.20D+0.50L+0.70S+E+1.60H	0.4724	+X	Bottom	0.216	Min Temp %	0.3433	10.191	OK
Z-Z. +0.90D+W+0.90H	0.2160	-X	Bottom	0.216	Min Temp %	0.3433	10.191	OK
Z-Z. +0.90D+W+0.90H	0.2160	+X	Bottom	0.216	Min Temp %	0.3433	10.191	OK
Z-Z. +0.90D+E+0.90H	0.2160	-X	Bottom	0.216	Min Temp %	0.3433	10.191	OK
Z-Z. +0.90D+E+0.90H	0.2160	+X	Bottom	0.216	Min Temp %	0.3433	10.191	OK

One Way Shear

Load Combination...	Vu @ -X	Vu @ +X	Vu @ -Z	Vu @ +Z	Vu:Max	Phi Vn	Vu / Phi*Vn	Status
+1.40D+1.60H	3.433 psi	3.433 psi	3.433 psi	3.433 psi	3.433 psi	75 psi	0.04578	OK
+1.20D+0.50Lr+1.60L+1.60H	8.972 psi	8.972 psi	8.972 psi	8.972 psi	8.972 psi	75 psi	0.1196	OK
+1.20D+1.60L+0.50S+1.60H	8.972 psi	8.972 psi	8.972 psi	8.972 psi	8.972 psi	75 psi	0.1196	OK
+1.20D+1.60Lr+0.50L+1.60H	4.827 psi	4.827 psi	4.827 psi	4.827 psi	4.827 psi	75 psi	0.06436	OK
+1.20D+1.60Lr+0.50W+1.60H	2.943 psi	2.943 psi	2.943 psi	2.943 psi	2.943 psi	75 psi	0.03924	OK
+1.20D+0.50L+1.60S+1.60H	4.827 psi	4.827 psi	4.827 psi	4.827 psi	4.827 psi	75 psi	0.06436	OK
+1.20D+1.60S+0.50W+1.60H	2.943 psi	2.943 psi	2.943 psi	2.943 psi	2.943 psi	75 psi	0.03924	OK
+1.20D+0.50Lr+0.50L+W+1.60H	4.827 psi	4.827 psi	4.827 psi	4.827 psi	4.827 psi	75 psi	0.06436	OK
+1.20D+0.50L+0.50S+W+1.60H	4.827 psi	4.827 psi	4.827 psi	4.827 psi	4.827 psi	75 psi	0.06436	OK
+1.20D+0.50L+0.70S+E+1.60H	4.827 psi	4.827 psi	4.827 psi	4.827 psi	4.827 psi	75 psi	0.06436	OK
+0.90D+W+0.90H	2.207 psi	2.207 psi	2.207 psi	2.207 psi	2.207 psi	75 psi	0.02943	OK
+0.90D+E+0.90H	2.207 psi	2.207 psi	2.207 psi	2.207 psi	2.207 psi	75 psi	0.02943	OK

Whipple Consulting Engineers
2528 N Sullivan Rd
Spokane Valley, WA 99216

Project Title:
Engineer:
Project Descr:

Project ID:

General Footing

File = P:\WCE_WORK\242IDK~9\2MHZA9~D\DBJGBY~H\SEV10W~K\C7A4YC~F\1CFED0~A.EC6
ENERCALC, INC. 1983-2016, Build:6.16.6.7, Ver:6.16.6.7

Lic. # : KW-06009199 — Licensee : Whipple Consulting Engineers

Description : F105 (FTG under C106)

Punching Shear

All units k

Load Combination...	Vu	Phi*Vn	Vu / Phi*Vn	Status
+1.40D+1.60H	12.739 psi	150 psi	0.08493	OK
+1.20D+0.50Lr+1.60L+1.60H	33.288 psi	150 psi	0.2219	OK
+1.20D+1.60L+0.50S+1.60H	33.288 psi	150 psi	0.2219	OK
+1.20D+1.60Lr+0.50L+1.60H	17.91 psi	150 psi	0.1194	OK
+1.20D+1.60Lr+0.50W+1.60H	10.919 psi	150 psi	0.0728	OK
+1.20D+0.50L+1.60S+1.60H	17.91 psi	150 psi	0.1194	OK
+1.20D+1.60S+0.50W+1.60H	10.919 psi	150 psi	0.0728	OK
+1.20D+0.50Lr+0.50L+W+1.60H	17.91 psi	150 psi	0.1194	OK
+1.20D+0.50L+0.50S+W+1.60H	17.91 psi	150 psi	0.1194	OK
+1.20D+0.50L+0.70S+E+1.60H	17.91 psi	150 psi	0.1194	OK
+0.90D+W+0.90H	8.189 psi	150 psi	0.0546	OK
+0.90D+E+0.90H	8.189 psi	150 psi	0.0546	OK

Whipple Consulting Engineers
2528 N Sullivan Rd
Spokane Valley, WA 99216

Project Title:
Engineer:
Project Descr:

Project ID:

General Footing

File = C:\Users\jaredk\Desktop\16-162-1.EC6
ENERCALC, INC. 1983-2016, Build:6.16.6.7, Ver:6.16.6.7
Lic. # : KW-06009199
Licensee : Whipple Consulting Engineers

Description : Garage Beam Footing

Code References

Calculations per ACI 318-11, IBC 2012, CBC 2013, ASCE 7-10
Load Combinations Used : IBC 2012

General Information

Material Properties

f'c : Concrete 28 day strength	=	2.50 ksi
fy : Rebar Yield	=	60.0 ksi
Ec : Concrete Elastic Modulus	=	3,122.0 ksi
Concrete Density	=	145.0 pcf
φ Values Flexure	=	0.90
Shear	=	0.750

Analysis Settings

Min Steel % Bending Reinf.	=	
Min Allow % Temp Reinf.	=	0.00180
Min. Overturning Safety Factor	=	1.0 : 1
Min. Sliding Safety Factor	=	1.0 : 1
Add Ftg Wt for Soil Pressure	:	Yes
Use ftg wt for stability, moments & shears	:	Yes
Add Pedestal Wt for Soil Pressure	:	Yes
Use Pedestal wt for stability, mom & shear	:	No

Soil Design Values

Allowable Soil Bearing	=	3.0 ksf
Increase Bearing By Footing Weight	=	No
Soil Passive Resistance (for Sliding)	=	250.0 pcf
Soil/Concrete Friction Coeff.	=	0.30

Increases based on footing Depth

Footing base depth below soil surface	=	0.0 ft
Allow press. increase per foot of depth	=	0.0 ksf
when footing base is below	=	0.0 ft

Increases based on footing plan dimension

Allowable pressure increase per foot of depth	=	0.0 ksf
when max. length or width is greater than	=	0.0 ft

Dimensions

Width parallel to X-X Axis	=	2.330 ft
Length parallel to Z-Z Axis	=	2.330 ft
Footing Thickness	=	10.0 in

Pedestal dimensions...

px : parallel to X-X Axis	=	0.0 in
pz : parallel to Z-Z Axis	=	0.0 in
Height	=	0.0 in

Rebar Centerline to Edge of Concrete...

at Bottom of footing	=	3.0 in

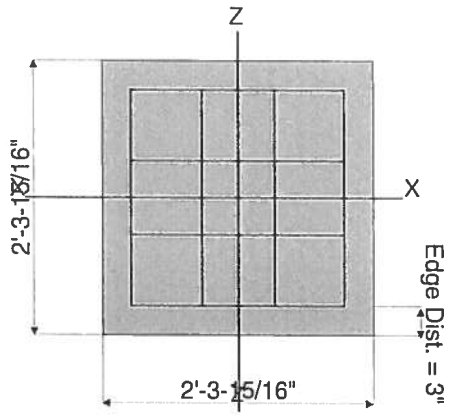

Reinforcing

Bars parallel to X-X Axis

Number of Bars	=	4.0
Reinforcing Bar Size	=	# 4

Bars parallel to Z-Z Axis

Number of Bars	=	4.0
Reinforcing Bar Size	=	# 4

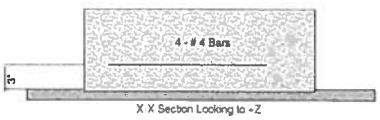

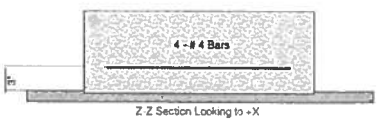

Bandwidth Distribution Check (ACI 15.4.4.2)

Direction Requiring Closer Separation	n/a
# Bars required within zone	n/a
# Bars required on each side of zone	n/a

Applied Loads

		D	Lr	L	S	W	E	H
P : Column Load	=	4.10	0.0	6.560	0.0	0.0	0.0	0.0 k
OB : Overburden	=	0.0	0.0	0.0	0.0	0.0	0.0	0.0 ksf
M-xx	=	0.0	0.0	0.0	0.0	0.0	0.0	0.0 k-ft
M-zz	=	0.0	0.0	0.0	0.0	0.0	0.0	0.0 k-ft
V-x	=	0.0	0.0	0.0	0.0	0.0	0.0	0.0 k
V-z	=	0.0	0.0	0.0	0.0	0.0	0.0	0.0 k

Whipple Consulting Engineers
2528 N Sullivan Rd
Spokane Valley, WA 99216

Project Title:
Engineer:
Project Descr:

Project ID:

General Footing

File = C:\Users\jaredk\Desktop\16-162-1.EC6
ENERCALC, INC. 1983-2016, Build:6.16.6.7, Ver:6.16.6.7
Lic. # : KW-06009199
Licensee : Whipple Consulting Engineers

Description : Garage Beam Footing

DESIGN SUMMARY

Design OK

	Min. Ratio	Item	Applied	Capacity	Governing Load Combination
PASS	0.6947	Soil Bearing	2.084 ksf	3.0 ksf	+D+L+H about Z-Z axis
PASS	n/a	Overturning - X-X	0.0 k-ft	0.0 k-ft	No Overturning
PASS	n/a	Overturning - Z-Z	0.0 k-ft	0.0 k-ft	No Overturning
PASS	n/a	Sliding - X-X	0.0 k	0.0 k	No Sliding
PASS	n/a	Sliding - Z-Z	0.0 k	0.0 k	No Sliding
PASS	n/a	Uplift	0.0 k	0.0 k	No Uplift
PASS	0.1891	Z Flexure (+X)	1.927 k-ft	10.191 k-ft	+1.20D+0.50Lr+1.60L+1.60H
PASS	0.1891	Z Flexure (-X)	1.927 k-ft	10.191 k-ft	+1.20D+0.50Lr+1.60L+1.60H
PASS	0.1891	X Flexure (+Z)	1.927 k-ft	10.191 k-ft	+1.20D+0.50Lr+1.60L+1.60H
PASS	0.1891	X Flexure (-Z)	1.927 k-ft	10.191 k-ft	+1.20D+0.50Lr+1.60L+1.60H
PASS	0.2626	1-way Shear (+X)	19.691 psi	75.0 psi	+1.20D+0.50Lr+1.60L+1.60H
PASS	0.2626	1-way Shear (-X)	19.691 psi	75.0 psi	+1.20D+0.50Lr+1.60L+1.60H
PASS	0.2626	1-way Shear (+Z)	19.691 psi	75.0 psi	+1.20D+0.50Lr+1.60L+1.60H
PASS	0.2626	1-way Shear (-Z)	19.691 psi	75.0 psi	+1.20D+0.50Lr+1.60L+1.60H
PASS	0.4871	2-way Punching	73.060 psi	150.0 psi	+1.20D+0.50Lr+1.60L+1.60H

Detailed Results

Soil Bearing

Rotation Axis & Load Combination...	Gross Allowable	Xecc (in)	Zecc (in)	Actual Soil Bearing Stress @ Location: Bottom, -Z	Top, +Z	Left, -X	Right, +X	Actual / Allow Ratio
X-X. +D+H	3.0	n/a	0.0	0.8761	0.8761	n/a	n/a	0.292
X-X. +D+L+H	3.0	n/a	0.0	2.084	2.084	n/a	n/a	0.695
X-X. +D+Lr+H	3.0	n/a	0.0	0.8761	0.8761	n/a	n/a	0.292
X-X. +D+S+H	3.0	n/a	0.0	0.8761	0.8761	n/a	n/a	0.292
X-X. +D+0.750Lr+0.750L+H	3.0	n/a	0.0	1.782	1.782	n/a	n/a	0.594
X-X. +D+0.750L+0.750S+H	3.0	n/a	0.0	1.782	1.782	n/a	n/a	0.594
X-X. +D+0.60W+H	3.0	n/a	0.0	0.8761	0.8761	n/a	n/a	0.292
X-X. +D+0.70E+H	3.0	n/a	0.0	0.8761	0.8761	n/a	n/a	0.292
X-X. +D+0.750Lr+0.750L+0.450W+H	3.0	n/a	0.0	1.782	1.782	n/a	n/a	0.594
X-X. +D+0.750L+0.750S+0.450W+H	3.0	n/a	0.0	1.782	1.782	n/a	n/a	0.594
X-X. +D+0.750L+0.750S+0.5250E+H	3.0	n/a	0.0	1.782	1.782	n/a	n/a	0.594
X-X. +0.60D+0.60W+0.60H	3.0	n/a	0.0	0.5256	0.5256	n/a	n/a	0.175
X-X. +0.60D+0.70E+0.60H	3.0	n/a	0.0	0.5256	0.5256	n/a	n/a	0.175
Z-Z. +D+H	3.0	0.0	n/a	n/a	n/a	0.8761	0.8761	0.292
Z-Z. +D+L+H	3.0	0.0	n/a	n/a	n/a	2.084	2.084	0.695
Z-Z. +D+Lr+H	3.0	0.0	n/a	n/a	n/a	0.8761	0.8761	0.292
Z-Z. +D+S+H	3.0	0.0	n/a	n/a	n/a	0.8761	0.8761	0.292
Z-Z. +D+0.750Lr+0.750L+H	3.0	0.0	n/a	n/a	n/a	1.782	1.782	0.594
Z-Z. +D+0.750L+0.750S+H	3.0	0.0	n/a	n/a	n/a	1.782	1.782	0.594
Z-Z. +D+0.60W+H	3.0	0.0	n/a	n/a	n/a	0.8761	0.8761	0.292
Z-Z. +D+0.70E+H	3.0	0.0	n/a	n/a	n/a	0.8761	0.8761	0.292
Z-Z. +D+0.750Lr+0.750L+0.450W+H	3.0	0.0	n/a	n/a	n/a	1.782	1.782	0.594
Z-Z. +D+0.750L+0.750S+0.450W+H	3.0	0.0	n/a	n/a	n/a	1.782	1.782	0.594
Z-Z. +D+0.750L+0.750S+0.5250E+H	3.0	0.0	n/a	n/a	n/a	1.782	1.782	0.594
Z-Z. +0.60D+0.60W+0.60H	3.0	0.0	n/a	n/a	n/a	0.5256	0.5256	0.175
Z-Z. +0.60D+0.70E+0.60H	3.0	0.0	n/a	n/a	n/a	0.5256	0.5256	0.175

Overturning Stability

Rotation Axis & Load Combination...	Overturning Moment	Resisting Moment	Stability Ratio	Status
Footing Has NO Overturning				

All units k

Sliding Stability

Force Application Axis Load Combination...	Sliding Force	Resisting Force	Stability Ratio	Status
Footing Has NO Sliding				

Whipple Consulting Engineers
2528 N Sullivan Rd
Spokane Valley, WA 99216

Project Title:
Engineer:
Project Descr:

Project ID:

General Footing

File = C:\Users\jaredk\Desktop\16-162~1.EC6
ENERCALC, INC. 1983-2016, Build:6.16.6.7, Ver:6.16.6.7

Lic. # : KW-06009199

Licensee : Whipple Consulting Engineers

Description : Garage Beam Footing

Footing Flexure

Flexure Axis & Load Combination	Mu k-ft	Side	Tension Surface	As Req'd in^2	Gvrn. As in^2	Actual As in^2	Phi*Mn k-ft	Status
X-X, +1.40D+1.60H	0.7175	+Z	Bottom	0.216	Min Temp %	0.3433	10.191	OK

Whipple Consulting Engineers
2528 N Sullivan Rd
Spokane Valley, WA 99216

Project Title:
Engineer:
Project Descr:

Project ID:

General Footing

File = C:\Users\jaredk\Desktop\16-162-1.EC6
ENERCALC, INC. 1983-2016, Build:6.16.6.7, Ver:6.16.6.7

Lic. # : KW-06009199

Licensee : Whipple Consulting Engineers

Description : Garage Beam Footing

Footing Flexure

Flexure Axis & Load Combination	Mu k-ft	Side	Tension Surface	As Req'd in^2	Gvrn. As in^2	Actual As in^2	Phi*Mn k-ft	Status
X-X, +1.40D+1.60H	0.7175	-Z	Bottom	0.216	Min Temp %	0.3433	10.191	OK
X-X, +1.20D+0.50Lr+1.60L+1.60H	1.927	+Z	Bottom	0.216	Min Temp %	0.3433	10.191	OK
X-X, +1.20D+0.50Lr+1.60L+1.60H	1.927	-Z	Bottom	0.216	Min Temp %	0.3433	10.191	OK
X-X, +1.20D+1.60L+0.50S+1.60H	1.927	+Z	Bottom	0.216	Min Temp %	0.3433	10.191	OK
X-X, +1.20D+1.60L+0.50S+1.60H	1.927	-Z	Bottom	0.216	Min Temp %	0.3433	10.191	OK
X-X, +1.20D+1.60Lr+0.50L+1.60H	1.025	+Z	Bottom	0.216	Min Temp %	0.3433	10.191	OK
X-X, +1.20D+1.60Lr+0.50L+1.60H	1.025	-Z	Bottom	0.216	Min Temp %	0.3433	10.191	OK
X-X, +1.20D+1.60Lr+0.50W+1.60H	0.6150	+Z	Bottom	0.216	Min Temp %	0.3433	10.191	OK
X-X, +1.20D+1.60Lr+0.50W+1.60H	0.6150	-Z	Bottom	0.216	Min Temp %	0.3433	10.191	OK
X-X, +1.20D+0.50L+1.60S+1.60H	1.025	+Z	Bottom	0.216	Min Temp %	0.3433	10.191	OK
X-X, +1.20D+0.50L+1.60S+1.60H	1.025	-Z	Bottom	0.216	Min Temp %	0.3433	10.191	OK
X-X, +1.20D+1.60S+0.50W+1.60H	0.6150	+Z	Bottom	0.216	Min Temp %	0.3433	10.191	OK
X-X, +1.20D+1.60S+0.50W+1.60H	0.6150	-Z	Bottom	0.216	Min Temp %	0.3433	10.191	OK
X-X, +1.20D+0.50Lr+0.50L+W+1.60H	1.025	+Z	Bottom	0.216	Min Temp %	0.3433	10.191	OK
X-X, +1.20D+0.50Lr+0.50L+W+1.60H	1.025	-Z	Bottom	0.216	Min Temp %	0.3433	10.191	OK
X-X, +1.20D+0.50L+0.50S+W+1.60H	1.025	+Z	Bottom	0.216	Min Temp %	0.3433	10.191	OK
X-X, +1.20D+0.50L+0.50S+W+1.60H	1.025	-Z	Bottom	0.216	Min Temp %	0.3433	10.191	OK
X-X, +1.20D+0.50L+0.70S+E+1.60H	1.025	+Z	Bottom	0.216	Min Temp %	0.3433	10.191	OK
X-X, +1.20D+0.50L+0.70S+E+1.60H	1.025	-Z	Bottom	0.216	Min Temp %	0.3433	10.191	OK
X-X, +0.90D+W+0.90H	0.4613	+Z	Bottom	0.216	Min Temp %	0.3433	10.191	OK
X-X, +0.90D+W+0.90H	0.4613	-Z	Bottom	0.216	Min Temp %	0.3433	10.191	OK
X-X, +0.90D+E+0.90H	0.4613	+Z	Bottom	0.216	Min Temp %	0.3433	10.191	OK
X-X, +0.90D+E+0.90H	0.4613	-Z	Bottom	0.216	Min Temp %	0.3433	10.191	OK
Z-Z, +1.40D+1.60H	0.7175	-X	Bottom	0.216	Min Temp %	0.3433	10.191	OK
Z-Z, +1.40D+1.60H	0.7175	+X	Bottom	0.216	Min Temp %	0.3433	10.191	OK
Z-Z, +1.20D+0.50Lr+1.60L+1.60H	1.927	-X	Bottom	0.216	Min Temp %	0.3433	10.191	OK
Z-Z, +1.20D+0.50Lr+1.60L+1.60H	1.927	+X	Bottom	0.216	Min Temp %	0.3433	10.191	OK
Z-Z, +1.20D+1.60L+0.50S+1.60H	1.927	-X	Bottom	0.216	Min Temp %	0.3433	10.191	OK
Z-Z, +1.20D+1.60L+0.50S+1.60H	1.927	+X	Bottom	0.216	Min Temp %	0.3433	10.191	OK
Z-Z, +1.20D+1.60Lr+0.50L+1.60H	1.025	-X	Bottom	0.216	Min Temp %	0.3433	10.191	OK
Z-Z, +1.20D+1.60Lr+0.50L+1.60H	1.025	+X	Bottom	0.216	Min Temp %	0.3433	10.191	OK
Z-Z, +1.20D+1.60Lr+0.50W+1.60H	0.6150	-X	Bottom	0.216	Min Temp %	0.3433	10.191	OK
Z-Z, +1.20D+1.60Lr+0.50W+1.60H	0.6150	+X	Bottom	0.216	Min Temp %	0.3433	10.191	OK
Z-Z, +1.20D+0.50L+1.60S+1.60H	1.025	-X	Bottom	0.216	Min Temp %	0.3433	10.191	OK
Z-Z, +1.20D+0.50L+1.60S+1.60H	1.025	+X	Bottom	0.216	Min Temp %	0.3433	10.191	OK
Z-Z, +1.20D+1.60S+0.50W+1.60H	0.6150	-X	Bottom	0.216	Min Temp %	0.3433	10.191	OK
Z-Z, +1.20D+1.60S+0.50W+1.60H	0.6150	+X	Bottom	0.216	Min Temp %	0.3433	10.191	OK
Z-Z, +1.20D+0.50Lr+0.50L+W+1.60H	1.025	-X	Bottom	0.216	Min Temp %	0.3433	10.191	OK
Z-Z, +1.20D+0.50Lr+0.50L+W+1.60H	1.025	+X	Bottom	0.216	Min Temp %	0.3433	10.191	OK
Z-Z, +1.20D+0.50L+0.50S+W+1.60H	1.025	-X	Bottom	0.216	Min Temp %	0.3433	10.191	OK
Z-Z, +1.20D+0.50L+0.50S+W+1.60H	1.025	+X	Bottom	0.216	Min Temp %	0.3433	10.191	OK
Z-Z, +1.20D+0.50L+0.70S+E+1.60H	1.025	-X	Bottom	0.216	Min Temp %	0.3433	10.191	OK
Z-Z, +1.20D+0.50L+0.70S+E+1.60H	1.025	+X	Bottom	0.216	Min Temp %	0.3433	10.191	OK
Z-Z, +0.90D+W+0.90H	0.4613	-X	Bottom	0.216	Min Temp %	0.3433	10.191	OK
Z-Z, +0.90D+W+0.90H	0.4613	+X	Bottom	0.216	Min Temp %	0.3433	10.191	OK
Z-Z, +0.90D+E+0.90H	0.4613	-X	Bottom	0.216	Min Temp %	0.3433	10.191	OK
Z-Z, +0.90D+E+0.90H	0.4613	+X	Bottom	0.216	Min Temp %	0.3433	10.191	OK

One Way Shear

Load Combination...	Vu @ -X	Vu @ +X	Vu @ -Z	Vu @ +Z	Vu:Max	Phi Vn	Vu / Phi*Vn	Status
+1.40D+1.60H	7.332 psi	7.332 psi	7.332 psi	7.332 psi	7.332 psi	75 psi	0.09776	OK
+1.20D+0.50Lr+1.60L+1.60H	19.691 psi	19.691 psi	19.691 psi	19.691 psi	19.691 psi	75 psi	0.2626	OK
+1.20D+1.60L+0.50S+1.60H	19.691 psi	19.691 psi	19.691 psi	19.691 psi	19.691 psi	75 psi	0.2626	OK
+1.20D+1.60Lr+0.50L+1.60H	10.474 psi	10.474 psi	10.474 psi	10.474 psi	10.474 psi	75 psi	0.1397	OK
+1.20D+1.60Lr+0.50W+1.60H	6.284 psi	6.284 psi	6.284 psi	6.284 psi	6.284 psi	75 psi	0.08379	OK
+1.20D+0.50L+1.60S+1.60H	10.474 psi	10.474 psi	10.474 psi	10.474 psi	10.474 psi	75 psi	0.1397	OK
+1.20D+1.60S+0.50W+1.60H	6.284 psi	6.284 psi	6.284 psi	6.284 psi	6.284 psi	75 psi	0.08379	OK
+1.20D+0.50Lr+0.50L+W+1.60H	10.474 psi	10.474 psi	10.474 psi	10.474 psi	10.474 psi	75 psi	0.1397	OK
+1.20D+0.50L+0.50S+W+1.60H	10.474 psi	10.474 psi	10.474 psi	10.474 psi	10.474 psi	75 psi	0.1397	OK
+1.20D+0.50L+0.70S+E+1.60H	10.474 psi	10.474 psi	10.474 psi	10.474 psi	10.474 psi	75 psi	0.1397	OK
+0.90D+W+0.90H	4.713 psi	4.713 psi	4.713 psi	4.713 psi	4.713 psi	75 psi	0.06285	OK
+0.90D+E+0.90H	4.713 psi	4.713 psi	4.713 psi	4.713 psi	4.713 psi	75 psi	0.06285	OK

Whipple Consulting Engineers
2528 N Sullivan Rd
Spokane Valley, WA 99216

Project Title:
Engineer:
Project Descr:

Project ID:

General Footing

File = C:\Users\jaredk\Desktop\16-162-1.EC6
ENERCALC, INC. 1983-2016, Build:6.16.6.7, Ver:6.16.6.7

Lic. # : KW-06009199

Licensee : Whipple Consulting Engineers

Description : Garage Beam Footing

Punching Shear

All units k

Load Combination...	Vu	Phi*Vn	Vu / Phi*Vn	Status
+1.40D+1.60H	27.203 psi	150 psi	0.1814	OK
+1.20D+0.50Lr+1.60L+1.60H	73.06 psi	150 psi	0.4871	OK
+1.20D+1.60L+0.50S+1.60H	73.06 psi	150 psi	0.4871	OK
+1.20D+1.60Lr+0.50L+1.60H	38.862 psi	150 psi	0.2591	OK
+1.20D+1.60Lr+0.50W+1.60H	23.317 psi	150 psi	0.1554	OK
+1.20D+0.50L+1.60S+1.60H	38.862 psi	150 psi	0.2591	OK
+1.20D+1.60S+0.50W+1.60H	23.317 psi	150 psi	0.1554	OK
+1.20D+0.50Lr+0.50L+W+1.60H	38.862 psi	150 psi	0.2591	OK
+1.20D+0.50L+0.50S+W+1.60H	38.862 psi	150 psi	0.2591	OK
+1.20D+0.50L+0.70S+E+1.60H	38.862 psi	150 psi	0.2591	OK
+0.90D+W+0.90H	17.488 psi	150 psi	0.1166	OK
+0.90D+E+0.90H	17.488 psi	150 psi	0.1166	OK

LEGACY VILLAS

STRIP FOOTINGS

TYP EXT

LOAD = 935 PLF

ALLOWABLE = 3000 PSF

1'-4" W TYP => 4000 PLF

∴ Ok

TYP INT

LOAD = 869 PLF < 4000 PLF

∴ Ok

WCE Whipple Consulting Engineers, Inc.
2528 N. Sullivan Rd. • Spokane Valley, WA 99216
Phone 509-893-2617 • Fax 509-926-0227

Traffic ☐ Planning ☐ Survey ☐ Structural ☑ Landscape ☐ Civil ☐

NAME OF PROJECT			SHEET NUMBER
LEGACY VILLAS			OF
COMPUTED BY	CHECKED BY	JOB NUMBER	DATE
JDK	CAP	16-1624	

TAS Technical Assistance Services

Garden Court Building, 222 W. Mission Avenue. Suite 234, Spokane, WA 99201 (509) 325-4476 FAX (509) 325-4587

06/14/16

Liberty Lake Planning and Community Development
22710 E. Country Vista Blvd.
Liberty Lake, WA

Project: 6 unit Multifamily Residence

Total Area: 6199 sq.ft.

Address: Legacy Villas 6-Plex
Country Vista Road
Liberty Lake, WA

Contact/ Phone: Lee Schwartzenburg, Wyatt Architects and Associates/ 928-1869

Glazing Percentage: 10.7%

Permit Center:

It is my opinion that plans submitted to TAS for the above project, **in conjunction with the compliance requirements noted below**, show compliance with the requirements of the 2012 Washington State Residential Energy Code (multifamily 3 stories or less). Compliance requirements not shown on the plans are noted below.

PROJECT COMPLIES with SECTION R402.1.4 TOTAL UA ALTERNATIVE with Target U-factors from TABLE R402.1.3 and WSU UA Alternative Worksheet for R-2 Occupancy, Washington State Residential Energy Code.

R402.1.4 Total UA Alternative. If the total building thermal envelope UA (sum of U-factors times assembly area) is less than or equal to the total UA resulting from using the U-factors in Table R402.1.3 (multiplied by the same assembly area as the proposed building), the building shall be considered in compliance with Table R402.2.2.

ALLOWABLE HEAT LOSS (Btu/h/deg.F)

Glazing (10.7%): 666 sq.ft. @ U .30	= 199.8
Doors: 168 sq.ft. @ U .30	= 50.4
Ceiling: 4166 sq.ft. R49 @ U .026	= 108.3
Walls: 4200 sq.ft. R21 INT @ U .056	= 235.2
Floor: 2133 sq.ft. R30n@ U .029	= 61.9
Slab: 161 l.f. R10 24" vertical or horizontal with thermal break @ .54 F-value	= 86.9
TOTAL UA ALLOWABLE	= 742.5

PROPOSED HEAT LOSS (Btu/h/deg.F)

Glazing (10.7%): 330 sq.ft.vinyl operable w/low-E + Argon @ U .30	= 99.0
210 sq.ft.vinyl fixed w/low-E + Argon @ U .27	= 56.7
126 sq.ft. insulated full light door w/low-E glazing @ U .28	= 35.3
Doors: 168 sq.ft. insulated @ U .16	= 26.9
Ceiling: 4166 sq.ft. R38 6:12 truss/ 10" ht. at Plate @ U .027	= 112.5
Walls: 4200 sq.ft. R21 INT horiz. siding @ U .054	= 226.8
Floor: 2133 sq.ft. R30 @ U .029	= 61.9
Slab: 161 l.f. R10 vert/ thermal break slab to foundation @ .54 F-value	= 86.9
TOTAL PROPOSED HEAT LOSS	= 706.0

706.0 Btu/h < 742.5 Btu/h -- **Project complies w/ Table R402.1.1**

1. ENVELOPE

a. sec. R303.1.1 **Building thermal envelope insulation.** Insulation installers shall provide a certification listing the type, manufacturer and R-values of insulation installed in each element of the building thermal envelope.

b. sec. R303.1.1.1 **Blown roof/ceiling insulation.** The thickness of blown-in roof/ceiling insulation (fiberglass or cellulose) shall be written in inches on markers that are installed at least one for every 300 sq.ft. throughout the attic space. The markers shall be affixed to the trusses or joists and marked with the minimum initial installed thickness.

c. sec. R303.1.2 **Insulation mark installation.** Insulating materials shall be installed such that the manufacturer's R-value mark is readily observable upon inspection.

d. sec. R402.4 **Air leakage.** The building thermal envelope shall be constructed to limit air leakage. See attached Table R402.4.1.1for air barrier and insulation installation as applicable to the method of construction.

e. sec. R402.4.1.2 **Testing.** The building or dwelling unit shall be tested and verified as having an air leakage rate of not exceeding 5 air changes per hour. Testing shall be conducted with a blower door at a pressure of 0.2 inches w.g. (50 Pascals). A written report of the results of the test shall be signed by the party conducting the test and provided to the code official.

f. sec. R402.4.3 **Air Leakage of fenestration.** Windows, skylights and sliding glass doors shall have an air infiltration rate of no more than 0.3 cfm per sq.ft. and swinging doors no more than 0.5 cfm per sq.ft. when tested according to NFRC 400 or AAMA/WDMA/CSA101/ I.S.2/A440 by an accredited, independent laboratory and listed and labeled by the manufacturer.

g. sec. 402.4.4 **Recessed lighting** (if used). Recessed luminaries installed in the building thermal envelope shall be type IC-rated and certified under ASTM E283 as having an air leakage rate not more than 2.0 cfm when tested at a 1.57 psf pressure differential.

2. MECHANICAL

a. sec. R403.1 **Controls.** At least one thermostat shall be provided for each separate heating and cooling system.

b. sec. R403.1.1 **programmable thermostat.** A programmable thermostat is not required unless the primary heating system is a forced air furnace.

c. sec. R403.4.2 **Hot water pipe insulation.** Insulation for hot water pipe shall have a minimum thermal resistance value of R-3.

d. sec. R403.4.3 **Electric water heater insulation.** All electric water heaters in unheated spaces or on concrete floors shall be placed on an incompressible, insulated surface with a minimum thermal resistance of R-10.

NOTE: The Washington State Residential Energy Code for residential buildings 3 stories or less **does not have specific efficiency requirements for HVAC systems in dwelling units unless the systems serve multiple dwelling units.**

The Residential Energy Code also does not have specific water heater efficiency requirements.

e. sec. R403.5 **Mechanical ventilation.** The building shall be provided with ventilation that meets the requirements of the International Residential Code or International Mechanical Code, as applicable, or with other means of ventilation. Outdoor intakes and exhausts shall have automatic or gravity dampers that close when the ventilation system is not operating.

f. sec. R403.5.1 **Mechanical ventilation system fan efficacy.** Range hoods and in-line fans with no minimum or maximum cfm rate and bathroom & utility fans with a minimum 90 cfm airflow rate shall have a minimum efficacy of 2.8 cfm/watt. Bathroom and utility fans with a minimum 10 cfm to less than 90 cfm maximum flow rate shall have a minimum efficacy of 1.4 cfm/watt.

Exception: Where mechanical ventilation fans are integral to tested and listed HVAC equipment, they shall be powered by an electronically commutated motor.

g. sec. R403.6 **Equipment sizing.** Heating and cooling equipment shall be sized in accordance with ACCA Manual S based on building loads calculated in accordance with Manual J or other approved heating and cooling calculation methodologies.

3. LIGHTING

NOTE: Lighting **must be 75% high efficacy lamps* in fixtures** - there is no wattage restriction. A high efficacy lamp is a compact fluorescent, T-8 or smaller diameter linear fluorescent lamp, or lamps with a minimum efficacy of:

1. 60 lumens per watt for lamps over 40 watts;
2. 50 lumens per watt for lamps over 15 watts to 49 watts; and
3. 40 lumens per watt for lamps 15 watts or less

* Total lamp count, not fixture count.

Exterior Lighting: Luminaires providing outdoor lighting and permanently mounted to a residential building or to other buildings on the same lot shall be high efficacy luminaries.

EXCEPTION: Permanently installed outdoor luminaries that are not high efficacy fixtures shall be allowed provided they are controlled by a motion sensor(s) with integral photo control photo sensor.

The Washington State Residential Energy Code does not have an Exterior Target Lighting Wattage Allowance for buildings or site.

Edward R. Fields

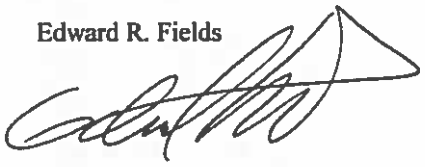

Technical Assistance Services
!CC Certification #1139685-78

TABLE R402.4.1.1
AIR BARRIER AND INSULATION INSTALLATION

COMPONENT	CRITERIA[a]
Air barrier and thermal barrier	A continuous air barrier shall be installed in the building envelope. Exterior thermal envelope contains a continuous air barrier. Breaks or joints in the air barrier shall be sealed. Air-permeable insulation shall not be used as a sealing material.
Cavity insulation installation	All cavities in the thermal envelope shall be filled with insulation. The density of the insulation shall be at the manufacturers' product recommendation and said density shall be maintained for all volume of each cavity. Batt type insulation will show no voids or gaps and maintain an even density for the entire cavity. Batt insulation shall be installed in the recommended cavity depth. Where an obstruction in the cavity due to services, blocking, bracing or other obstruction exists, the batt product will be cut to fit the remaining depth of the cavity. Where the batt is cut around obstructions, loose fill insulation shall be placed to fill any surface or concealed voids, and at the manufacturers' specified density. Where faced batt is used, the installation tabs must be stapled to the face of the stud. There shall be no compression to the batt at the edges of the cavity due to inset stapling installation tabs. Insulation that upon installation readily conforms to available space shall be installed filling the entire cavity and within the manufacturers' density recommendation.
Ceiling/attic	The air barrier in any dropped ceiling/soffit shall be aligned with the insulation and any gaps in the air barrier sealed. Access openings, drop down stair or knee wall doors to unconditioned attic spaces shall be sealed. Batt insulation installed in attic roof assemblies may be compressed at exterior wall lines to allow for required attic ventilation.
Walls	Corners and headers shall be insulated and the junction of the foundation and sill plate shall be sealed. The junction of the top plate and top of exterior walls shall be sealed. Exterior thermal envelope insulation for framed walls shall be installed in substantial contact and continuous alignment with the air barrier. Knee walls shall be sealed.
Windows, skylights and doors	The space between window/door jambs and framing and skylights and framing shall be sealed.
Rim joists	Rim joists shall be insulated and include the air barrier.
Floors (including above-garage and cantilevered floors)	Insulation shall be installed to maintain permanent contact with underside of subfloor decking. The air barrier shall be installed at any exposed edge of insulation.
Crawl space walls	Where provided in lieu of floor insulation, insulation shall be permanently attached to the crawlspace walls. Exposed earth in unvented crawl spaces shall be covered with a Class I vapor retarder with overlapping joints taped.
Shafts, penetrations	Duct shafts, utility penetrations, and flue shafts opening to exterior or unconditioned space shall be sealed.
Narrow cavities	Batts in narrow cavities shall be cut to fit and installed to the correct density without any voids or gaps or compression. Narrow cavities shall be filled by insulation that on installation readily conforms to the available cavity space.
Garage separation	Air sealing shall be provided between the garage and conditioned spaces.
Recessed lighting	Recessed light fixtures installed in the building thermal envelope shall be air tight, IC rated, and sealed to the drywall.
Plumbing and wiring	Batt insulation shall be cut neatly to fit around wiring and plumbing in exterior walls. There shall be no voids or gaps or compression where cut to fit. Insulation that on installation readily conforms to available space shall extend behind piping and wiring.
Shower/tub on exterior wall	Exterior walls adjacent to showers and tubs shall be insulated and the air barrier installed separating them from the showers and tubs.
Electrical/phone box on exterior walls	The air barrier shall be installed behind electrical or communication boxes or air sealed boxes shall be installed.
HVAC register boots	HVAC register boots that penetrate building thermal envelope shall be sealed to the subfloor or drywall.
Fireplace	An air barrier shall be installed on fireplace walls. Fireplaces shall have gasketed doors.

a. In addition, inspection of log walls shall be in accordance with the provisions of ICC-400.